PICO BRANCH LIBRARY

2201 PICO BLVD
SANTA MONICA, CA 90404

65% CONSTRUCTION DOCUMENTS / BID SET

PICO BRANCH LIBRARY
2201 Pico Blvd.
Santa Monica, CA 90404

PROJECT

KoningEizenbergArchitecture
1454 25th St, Santa Monica, CA 90404

310.828.6131 info@kearch.com
310.828.0719 fax www.kearch.com

ARCHITECT'S PROJECT NO.
1001

ARCHITECT

All designs, ideas, arrangements and plans indicated by these drawings are the property and copyright of the Architect and shall neither be used on any other work nor be disclosed to any other person for any use whatsoever without written permission.

Koning Eizenberg Architecture and/or its principals and employees waives any and all liability or responsibility for problems that may occur when these plans, drawings, specifications, and/or designs are followed without the professional's guidance with ambiguities, or conflicts which are alleged.

CONSULTANT

City of
Santa Monica
Architecture Services

1437 4TH STREET, SUITE 300
SANTA MONICA, CA 90401
TEL. (310) 458-2205
FAX. (310) 399-1541
architecture@smgov.net

DATE : _____ 20 __
SUBMITTED BY :

DATE : _____ 20 __
APPROVED BY :
Miriam Mulder,
Architecture Services Manager

CITY OF SANTA MONICA
DEPARTMENT OF PUBLIC WORKS

REVIEWED BY : DATE : _____ 20 __

REVIEWED BY : DATE : _____ 20 __

REVIEWED BY : DATE : _____ 20 __

CITY CLIENT

NO.	DATE	BY	DESCRIPTION

REVISIONS

ISSUE
65% CONSTRUCTION DOCUMENTS / BID SET

DATE
01/23/2012

DRAWING NO. **6693**

SHEET OF SHEETS

SHEET TITLE
COVER SHEET

SHEET NO.
A0.00

SHEET OF

DWG NO. -

TITLE OF PROJECT:

&	AND
<	ANGLE OR LESS THAN
@	AT
℄	CENTERLINE
∅	DIAMETER OR ROUND
$	DOLLAR (US CURRENCY)
#	NUMBER OR POUND
⊥	PERPENDICULAR
AB	ANCHOR BOLT
ABV	ABOVE
AC	ASPHALTIC CONCRETE
ACT	ACOUSTICAL CEILING TILES
ACCES	ACCESSORIES
AD	AREA DRAIN
ADJ	ADJACENT
AFF	ABOVE FINISH FLOOR
AGGR	AGGREGATE
ALT	ALTERNATE
ALUM	ALUMINUM
ANNUNC	ANNUNCIATOR
ANOD	ANODIZED
AP	ACCESS PANEL
APPL	APPLIANCE
APPROX	APPROXIMATELY
ARCH	ARCHITECTURE
ARCH'T	ARCHITECT
AUTO	AUTOMATIC
AVG	AVERAGE
BD	BOARD
BET/BTW	BETWEEN
BL	BUILDING LINE
BLDG	BUILDING
BLK	BLOCK
BLKG	BLOCKING
BLKT	BLANKET
BM	BEAM
BMU	BRICK MASONRY UNIT
BN	BOUNDARY NAIL
BO	BOTTOM OF
BOS	BOTTOM OF STRUCTURE
BRDG	BRIDGING
BRKT	BRACKET
BS	BOTH SIDES
BTU	BRITISH THERMAL UNIT
BUR	BUILT-UP ROOFING
BYND	BEYOND
CAB	CABINET
CB	CATCH BASIN
CBC	CALIFORNIA BUILDING CODE
C/C	CENTER TO CENTER
CEM	CEMENT
CG	CORNER GUARD
CHBC	CALIFORNIA HISTORIC BUILDING CODE
CIP	CAST IN PLACE
CJ	CONSTRUCTION JOINT
CL	CENTER LINE
CLG	CEILING
CLKG	CAULKING
CLO	CLOSET
CLR	CLEAR
CMU	CONCRETE MASONRY UNIT
CO	CLEAN OUT
COL	COLUMN
COMP	COMPOSITION
CONC	CONCRETE
CONN	CONNECTION
CONST	CONSTRUCTION
CONT	CONTINUOUS
COORD	COORDINATE
CORR	CORRIDOR
CORRG	CORRUGATED
CPT	CARPET
CS	COUNTER SINK
CT	CERAMIC TILE
CTR	CENTER
CW	COLD WATER
D	DRYER
DBL	DOUBLE
DEG	DEGREES
DEPT	DEPARTMENT
DET	DETAIL
DF	DRINKING FOUNTAIN or DOUGLAS FIR
DIA	DIAMETER
DIAG	DIAGONAL
DIFF	DIFFUSER
DIM	DIMENSION
DISP	DISPENSER
DIV	DIVISION
DN	DOWN
DR	DOOR
DS	DOWN SPOUT
DW	DISHWASHER
DWG	DRAWING
DWR	DRAWER
E	EAST
EA	EACH
EF	EACH FACE
EG	EXISTING GRADE
EJ	EXPANSION JOINT
EL	ELEVATION, VERTICAL
ELAST	ELASTOMERIC
ELAST COAT'G	ELASTOMETRIC COATING

ELEC	ELECTRIC(AL)
ELEV	ELEVATOR
EMBED	EMBEDD(ED)(ING)
EMER	EMERGENCY
ENAM	ENAMEL
ENCL	ENCLOSURE
ENG	ENGINEER
EP	ELECTRICAL PANEL
EQ	EQUAL SPACE
EQPT	EQUIPMENT
EXH	EXHAUST
EXIST'G / (E)	EXISTING
EXP	EXPOSED
EXT	EXTERIOR
EXPO	EXPOSED
FA	FIRE ALARM
FAB	FABRICAT(E)(ION)
FB	FROM BELOW
FC	FINISHED CEILING
FD	FLOOR DRAIN
FDC	FIRE DEPARTMENT CONNECTION
FDN	FOUNDATION
FE	FIRE EXTINGUISHER
FEC	FIRE EXTINGUISHER CABINET
FF	FINISH FLOOR
FHC	FIRE HOSE CABINET
FIN	FINISH
FIX	FIXED
FIXT	FIXTURE
FL	FLOW LINE
FLSHNG	FLASHING
FLDNG	FOLDING
FLR or FLRG	FLOOR(ING)
FLUOR	FLUORESCENT
FO	FACE OF
FOC	FACE OF CONCRETE
FOF	FACE OF FINISH
FOM	FACE OF MASONRY
FOS	FACE OF STRUCTURE
FOW	FACE OF WALL
FP	FIREPLACE
FPRF	FIRE PROOF
FR	FIRE RAT(ED)(ING)
FRMG	FRAMING
FS	FLOOR SINK
FT	FOOT/FEET
FTNG	FOOTING
FUR	FURRING
FURN	FURNITURE
GA	GAUGE
GALV	GALVINIZED
GB	GRAB BAR
GC	GENERAL CONTRACTOR
GD	GARBAGE DISPOSAL
GEN	GENERAL
GFRG	GLASS FIBER REINFORCED GYPSUM
GFRP	GLASS FIBER REINFORCED PLASTER
GL	GLASS
GLAZ	GLAZING
GLB	GLUE LAMINATED BEAM
GR	GRAD(E)(ING)
GR	GUARDRAIL
GRND	GROUND
GRTG	GRATING
GS	GRAVEL STOP
GSM	GALVINIZED SHEET METAL
GYP	GYPSUM
GYP BD	GYPSUM BOARD
GWB	GYPSUM WALL BOARD
HB	HOSE BIB
HC	HANDICAP or HOLLOW CORE
HCT	HOLLOW CLAY TILE
HD	HEAD
HDF	HIGH DENSITY FIBERBOARD
HDG	HOP DIPPED GALVANIZED
HDR	HEADER
HDWD	HARDWOOD
HDWR	HARDWARE
HT	HEIGHT
HM	HOLLOW METAL
HORIZ	HORIZONTAL
HP	HIGH POINT
HR	HAND RAIL
HSS	HOLLOW STEEL SECTION
HTNG	HEATING
HW	HOT WATER
HVAC	HEATING/VENTILATION & AIR CONDITIONING
HVY	HEAVY
ID	INSIDE DIAMETER
IN	INCH
INCL	INCLUD(ED)(ING)
IE	INVERT ELEVATION
IF	INSIDE FACE
INFILTR	INFILTRATION
INFO	INFORMATION
INSTAL	INSTALL(ATION)
INSTRUC	INSTRUCTION
INSUL	INSULATION
INT	INTERIOR
INTERMED	INTERMEDIATE
INV	INVERT
JAN	JANITOR
JST	JOIST
JT	JOINT

K	KIP
KIT	KITCHEN
KP	KICK PLATE
L	LENGTH
LAV	LAVATORY
LBS or #	POUNDS
LF	LINEAL FEET
LH	LEFT HAND
LIN	LINEN
LL	LIVE LOAD
LO	LINE OF
LOBA	LINE OF BUILDING ABOVE
LP	LOW POINT
LT	LIGHT
LTWT	LIGHT WEIGHT
LVR	LOUVER
MACH	MACHINE
MAN	MANUAL
MATL	MATERIAL
MAX	MAXIMUM
MB	MACHINE BOLT
MC	MEDICINE CABINET
MDF	MEDIUM DENSITY FIBERBOARD
MDO	MEDIUM DENSITY OVERLAY
MECH	MECHANICAL
MEMB	MEMBRANE
MEZZ	MEZZANINE
MF	MOMENT FRAME
MFD	MANUFACTURED
MFR	MANUFACTURER
MH	MANHOLE
MIN	MINIMUM
MIR	MIRROR
MISC	MISCELLANEOUS
MLWK	MILLWORK
MOIST	MOISTURE
MOT	MOTOR(IZED)
MTD	MOUNTED
MTL	METAL
MIX	MIXTURE
MULL	MULLION
(N)	NEW
N	NORTH
NAT	NATURAL
NIC	NOT IN CONTRACT
NO or #	NUMBER
NTS	NOT TO SCALE
OBS	OBSCURE
OC	ON CENTER
OD	OUTSIDE DIAMETER or OVERFLOW DRAIN
OFF	OFFICE
OH	OPPOSITE HAND
OPNG	OPENING
OPP	OPPOSITE
ORIG	ORIGINAL
OS	OVERFLOW SCUPPER
OT	OUTLET
OSA	OUTSIDE AIR
OV	OVER
OVFL	OVERFLOW
OVHD	OVERHEAD
PA	PLANTING AREA
PBD	PARTICLE BOARD
PED	PEDESTRIAN
PERF	PERFORATED
PJ	POUR JOINT
PL	PROPERTY LINE or PLATE
PLAS	PLASTER
PLAM	PLASTIC LAMINATE
PLBNG	PLUMBING
PLYWD	PLYWOOD
PNL	PANEL
PP	POWER POLE
PR	PAIR
PREFAB	PREFABRICATED
PREFIN	PREFINISHED
PRVD	PROVIDED
PROJ	PROJECT
PSF	POUNDS PER SQ FT
PT	POINT
PTD	PAINTED
PTN	PARTITION
PVC	POLYVINYL CHLORIDE
QT	QUARRY TILE
QTY	QUANTITY
R	RISER
RA	RETURN AIR
RAD	RADIUS
RAH	ROOF ACCESS HATCH
RCP	REFLECTED CEILING PLAN
RD	ROOF DRAIN
REC	RECESSED
RECIRC	RECIRCULATING
RECEP	RECEPTACLE
RECS	RECOMMENDATIONS
REF	REFERENCE or REFRIGERATOR
REG	REGISTER or REGULATION or REGULAR
REINF	REINFORCEMENT
REMOV	REMOVE
RESD'L	RESIDENTIAL
RESIL	RESILIENT
REQ'D	REQUIRED
REV	REVISED or REVISION

RF	ROOF
RFNG	ROOFING
RH	RIGHT HAND
RJ	ROOF JOIST
RND	ROUND
RM	ROOM
RO	ROUGH OPENING
ROD	ROOF OVERFLOW DRAIN
ROW	RIGHT OF WAY
RP	ROOF PLAN
RR	ROOF RAFTERS
RDWD	REDWOOD
S	SOUTH
SA	SUPPLY AIR
SC	SOLID CORE
SCHED	SCHEDULE
SCUP	SCUPPER
SECT	SECTION
SEP	SEPARATE
SF	SQUARE FEET
SFL	SUB FLOOR
SGL	SINGLE
SHT	SHEET
SHRNG	SHORING
SIM	SIMILAR (NOT IDENTICAL)
SCD	SEE CIVIL DRAWINGS
SDNG	SIDING
SED	SEE ELECTRICAL DRAWINGS
SEW	SEWER
SHWR	SHOWER
SL	SLOPE
SLD	SEE LANDSCAPE DRAWINGS
SLCD	SEE LIGHTING CONSULTANT'S DRAWINGS
SMD	SEE MECHANICAL DRAWINGS
SOG	SLAB ON GRADE
S&P	SHELF AND POLE
SP	STANDPIPE
SPD	SEE PLUMBING DRAWINGS
SPEC	SPECIFICATIONS
SQ	SQUARE
SSD	SEE STRUCTURAL DRAWINGS
SS	SELECT STRUCTURAL or STAINLESS STEEL
STD	STANDARD or STAINED
STL	STEEL
STOR	STORAGE
STRFR	STOREFRONT
STRUCT	STRUCTURAL
SUSP	SUSPENDED
SYM	SYMETRICAL
TBD	TO BE DETERMINED
TEL	TELEPHONE
TEMP	TEMPERED or TEMPORARY
T&B	TOP AND BOTTOM
T&G	TONGUE AND GROOVE
THK	THICK(NESS)
THRU	THROUGH
TO	TOP OF
TOC	TOP OF CONCRETE
TOD	TOP OF DECK
TOJ	TOP OF JOIST
TOP	TOP OF PARAPET
TOS	TOP OF STRUCTURE
TOSL	TOP OF SLAB
TOST	TOP OF STEEL
TOW	TOP OF WALL
TR	TREAD
TRTD	TREATED
TS	TUBULAR STEEL
TV	TELEVISION
TYP	TYPICAL
UBC	UNIFORM BUILDING CODE or APPICABLE LOCAL BLDG CODE
UL	UNDERWRITERS LABORATORY
UNDRLAY	UNDERLAYMENT
UNO	UNLESS NOTED OTHERWISE
U/S	UNDERSIDE
UTIL	UTILITY
V	VOID
VB	VAPOR BARRIER
VCT	VINYL COMPOSITE TILE
VG	VERTICAL GRAIN
VGDF	VERTICAL GRAIN DOUGLAS FIR
VENT	VENTILATION
VERT	VERTICAL
VIF	VERIFY IN FIELD
VOL	VOLUME
VTR	VENT THROUGH ROOF
W	WEST or WIDE FLANGE or WASHER
W/	WITH
WC	WATER CLOSET
WD	WOOD
W/D	WASHER AND DRYER
WF	WALL FURNACE
WGL	WIRE GLASS
WH	WATER HEATER or WEEP HOLE
WN	WINDOW
W/O	WITHOUT
WP	WATERPROOF(ING)
WPM	WATERPROOF MEMBRANE
WT	WEIGHT
WWF	WELDED WIRE FABRIC
WKPT	WORK POINT

ABBREVIATIONS | 6

PROJECT DESCRIPTION

NEW CONSTRUCTION OF A SINGLE STORY BRANCH LIBRARY WITHIN VIRGINIA AVENUE PARK IN SANTA MONICA.

THE PROPOSED BUILDING SITS ALONG THE SOUTH ELEVATION OF THE EXISTING THELMA TERRY BUILDING. THE 8,690 GSF STRUCTURE IS BROKEN UP INTO TWO MASSES CONNECTED BY A SINGLE ROOF. THE BUILDING WILL BE TYPE 5B CONSTRUCTION AND REQUIRED TO OBTAIN A MINIMUM LEED SILVER CERTIFICATION.

NO ADDITIONAL PARKING IS REQUIRED FOR THE PROJECT.THERE ARE 119 EXISTING PARKING STALLS AT THE PARK. THIS DOES NOT INCLUDE 69 OVERFLOW SPACES THAT OPEN UP FOR THE FARMER'S MARKET ON SATURDAY. SEE THE ATTACHED PLOT PLAN FOR EXISTING PARKING LOCATIONS.

NEW STRUCTURE IS SEPERATED FROM (E) THELMA TERRY BUILDING BY A 2 HOUR FIRE WALL.

PROJECT DATA

PROJECT:	PICO BRANCH LIBRARY
LOCATION:	VIRGINIA AVE PARK SANTA MONICA, CA *PROJECT ADDRESS TBD*
ARCHITECT JOB #:	1001
PRINCIPAL IN CHARGE	JULIE EIZENBERG
PROJECT MANAGER	JENNIFER RIOS
APPLICABLE CODES	2010 CALIFORNIA BUILDING CODE (CBC) 2010 CALIFORNIA PLUMBING CODE 2010 CALIFORNIA MECHANICAL CODE 2010 CALIFORNIA ELECTRICAL CODE 2010 CAL GREEN BUILDING CODE
ZONING CODE	CITY OF SANTA MONICA PLANNING & ZONING 1998
REVIEWS	CITY COUNCIL PLANNING COMMISSION PUBLIC ART COMMITTEE ARTS COMMISSION ARCHITECTURAL REVIEW BOARD RECREATION & PARKS COMMISSION VIRGINIA AVENUE PARK BOARD
ZONE	DP - DESIGNATED PARKS DISTRICT, CUP
LOT AREA	PARK AREA: APPROX 414,691 SF (9.4 ACRES)
LOT COVERAGE	N/A
FLOOD ZONE	N/A
PARKING	NON REQUIRED FOR PLANNING APPROVAL
OPEN SPACE REQ	N/A
EASEMENTS & DEDICATIONS	NONE
SETBACKS	FRONT: NONE REAR: NONE SIDE: NONE
MAX ALLOWED BUILDING HEIGHT	30'-0"
BUILDING HEIGHT	VARIES, 25'-11" MAX, SINGLE STORY
BUILDING AREA	8,690 SF
OCCUPANCY	TABLE 3A - ASSEMBLY ASSEMBLY GROUP A-3 OFFICE GROUP B STORAGE GROUP S-2
CONSTRUCTION TYPE	CBC TABLE 5B - TYPE VB - FULLY SPRINKLED

MAX ALLOWABLE AREA = 6,000 (MOST RESTRICTIVE OCCUPANCY A-3) + 200% SPRINKLER CREDIT: 18,000 S.F.

FIRE SPRINKLERS	REQUIRED. MONITORED IF OVER 100 SPRINKLER HEADS
FIRE ALARM SYSTEM	REQUIRED

PROJECT DATA | 4

GENERAL

A0.00	COVER SHEET
A0.10	PROJECT INFORMATION
A0.20	LETTERS OF APPROVAL
A0.30	CODE ANALYSIS & DIAGRAMS
A0.40	GENERAL NOTES
A0.50	ADA NOTES
A0.60	ADA NOTES & DIAGRAMS
A0.70	ADA DIAGRAMS

CIVIL

C0.10	TITLE SHEET
C1.00	EROSION CONTROL PLAN
C1.10	DEMOLITION PLAN
C1.20	GRADING DRAINAGE PLAN
C1.21	GRADING DRAINAGE PLAN
C1.30	PAVING AND HORIZONTAL CONTROL PLAN
C1.40	UTILITY PLAN
C5.00	DETAILS
C5.01	DETAILS

LANDSCAPE

L1.01A	HARDSCAPE PLAN
L1.01B	HARDSCAPE DIMENSION PLAN
L1.02	HARDSCAPE LEGEND
L1.03	HARDSCAPE DETAILS
L1.04	HARDSCAPE DETAILS
L1.05	HARDSCAPE DETAILS
L1.06	HARDSCAPE DETAILS
L1.07	ELEVATIONS
L1.08	SECTIONS
L2.01	IRRIGATION PLAN
L2.02	IRRIGATION LEGEND
L2.03	IRRIGATION DETAILS
L3.00	TREE PROTECTION PLAN
L3.01	PLANTING PLAN
L3.02	PLANTING LEGEND
L3.03	PLANTING DETAILS
L3.04	PLANTING DETAILS

ARCHITECTURAL

A1.00	SITE SURVEY
A1.00a	ENLARGED SITE SURVEY
A1.01	SITE DEMOLTION PLAN
A1.02	THELMA TERRY DEMOLITION PLANS & ELEVATIONS
A1.03	SITE PLAN
A1.04	STAGING PLAN
A2.00	FOUNDATION / SLAB PLAN
A2.10	FLOOR PLAN
A2.20	ROOF PLAN
A3.00	EXTERIOR ELEVATIONS
A3.10	EXTERIOR ELEVATIONS
A4.00	BUILDING SECTIONS
A4.10	BUILDING SECTIONS
A4.20	BUILDING SECTIONS
A4.30	BUILDING SECTIONS
A4.40	BUILDING SECTIONS
A5.00	WALL SECTIONS
A5.10	WALL SECTIONS
A5.20	WALL SECTIONS
A5.30	WALL SECTIONS
A6.00	ENLARGED PLANS
A6.10	ENLARGED PLANS
A7.00	INTERIOR ELEVATIONS
A7.10	INTERIOR ELEVATIONS
A7.20	INTERIOR ELEVATIONS
A8.10	REFLECTED CEILING PLAN
A9.00	SITE DETAILS
A9.10	EXTERIOR DETAILS
A9.20	WALL/ ROOF/ FLOOR DETAILS
A9.21	WALL / ROOF/ FLOOR DETAILS
A9.22	WALL/ ROOF/ FLOOR DETAILS
A9.23	WALL / ROOF/ FLOOR DETAILS
A9.30	WALL / ROOF / FLOOR ASSEMBLIES
A9.40	DOOR SCHEDULE
A9.41	DOOR DETAILS
A9.42	DOOR DETAILS
A9.50	WINDOW TYPES
A9.51	WINDOW DETAILS
A9.52	WINDOW DETAILS
A9.60	FINISH PLAN & SCHEDULE
A9.70	FURNITURE PLAN
A9.71	FURNITURE LEGEND
A9.80	MILLWORK DETAILS
A9.90	INTERIOR DETAILS

STRUCTURAL

S0.01	GENERAL NOTES
S0.02	GENERAL NOTES
S0.03	GENERAL NOTES
S0.04	ABBREVIATIONS
S1.00	FOUNDATION & GROUND FLOOR PLAN
S1.01	ROOF FRAMING PLAN
S2.01	ELEVATIONS
S2.03	SECTIONS
S3.01	TYPICAL CONCRETE DETAILS
S3.02	TYPICAL CONCRETE DETAILS
S3.03	FOUNDATION SECTIONS AND DETAILS
S3.04	FOUNDATION DETAILS
S5.01	TYPICAL STEEL COLUMN DETAILS
S5.02	TYPICAL STEEL BEAM DETAILS
S6.01	TYPICAL CMU DETAILS
S7.01	TYPICAL WOOD DETAILS AND SCHEDULES
S7.02	TYPICAL WOOD DETAILS
S7.03	TYPICAL WOOD WALL FRAMING DETAILS
S7.04	TYPICAL WOOD SHEARWALL DETAILS
S7.05	TYPICAL ROOF JOIST DETAILS
S7.06	TYPICAL ROOF DETAILS

MECHANICAL

M0.1	MECHANICAL LEAD SHEET
M1.0	MECHANICAL UNIT SCHEDULES
M2.0	MECHANICAL FLOOR PLAN
M2.0A	MECHANICAL FLOOR PLAN (UNDERFLOOR)
M2.1	MECHANICAL ROOF PLAN
M4.0	MECHANICAL DETAILS

PLUMBING

P0.1	PLUMBING LEAD SHEET
P0.2	PLUMBING SCHEDULES
P2.0	PLUMBING PLAN
P2.1	ENLARGED PLUMBING PLANS
P2.2	PLUMBING ROOF PLAN

ELECTRICAL

E0.1	ELECTRICAL LEAD SHEET
E0.2	SINGLE LINE DIAGRAM/PANEL SCHEDULES
E0.3	TITLE24/LIGHTING FIXTURE SCHEDULE
E0.4	TITLE 24 LIGHTING
E0.5	LIGHTING CONTROL RISER DIAGRAM & SCHEDULES
E1.0	ELECTRICAL SITE PLAN
E2.0	ELECTRICAL POWER PLAN
E2.1	ELECTRICAL POWER ROOF PLAN
E3.0	LIGHTING PLAN
E5.1	PANELBOARD SCHEDULES
E5.2	LIGHTING CONTROL DIAGRAM

AV

AV0.01	GENERAL NOTES BOX SCHEDULE AND SHEET INDEX
AV0.02	ABBREVIATIONS NOTES AND SYMBOLS
AV1.01A	COMMUNITY ROOM EQUIPMENT PLAN
AV1.01B	COMMUNITY ROOM INFRASTRUCTURE PLAN
AV1.02A	LIBRARY EQUIPMENT PLAN
AV1.02B	LIBRARY IINFRASTRUCTURE PLAN
AV2.51	SECTIONS AND ELEVATIONS
AV3.00	WIRING SCHEME AND SYMBOL KEY
AV3.01	SCHEMATIC DIAGRAM
AV4.51	TYPICAL EQUIPMENT ROOM LAYOUT
AV6.01	AV DETAILS
AV6.02	AV DETAILS
AV6.03	AV DETAILS

IT

T0.01	GENERAL NOTES BOX SCHEDULE AND SHEET INDEX
T0.02	ABBREVIATIONS NOTES AND SYMBOLS
T1.01	IT MAIN FLOOR PLAN
T2.01	IT REFLECTIVE CEILING PLAN
T4.51	IT EQUIPMENT ROOM LAYOUTS
T6.01	IT GROUNDING DETAILS
T6.02	IT DETAILS

GRAPHICS

G0	GENERAL NOTES
G1	SITE SIGN PLAN
G2	SIGN PLAN
G3	ELEVATION & DETAILS
G4	ELEVATION & DETAILS
G5	ELEVATION & DETAILS
G6	ELEVATION & DETAILS
G7	ELEVATION & DETAILS
G8	ELEVATION & DETAILS

SHEET INDEX | 2

ELEVATION REFERENCE (X / AX.XX)

SECTION REFERENCE (X / AX.XX)

DETAIL REFERENCE (X / AX.XX)

DETAIL REFERENCE (X / AX.XX)

REVISION NUMBER (XX)

INTERIOR ELEVATION REFERENCE (XX / X / AX.XX / XX / XX)

DOOR REFERENCE NUMBER (XXX)

WINDOW REFERENCE NUMBER (X.X)

SMOKE DETECTOR (SD)

EXIT SIGN

GRIDLINE NUMBER (1, 2)

GRIDLINE DIMENSION (9'-0")

GRIDLINE

DIMENSION TO FACE OF FINISH. U.N.O. (1 1/2")

ROOM / AREA NAME & NUMBER (ROOM NAME XXX)

UNIT TYPE (S01)

UNIT NUMBER (101)

ENLARGED UNIT LOCATION (X/AX.XX)

BATHROOM ACCESSORY / FINISHES (XX)

PROTECTED OPENINGS (SEE MODIFICATIONS) (PO)

FIRE EXTINGUISHER (FE)

KEYNOTE (XX)

FINISH FLOOR SPOT ELEVATION (XX)

WALL TYPE REFERENCE (XX)

ELEVATION MARKER (FIRST FLOOR +100.00' / TOP OF JOIST)

CENTERLINE

PROPERTY LINE

TOP OF STRUCTURE SPOT ELEVATION (XX)

TOP OF STRUCTURE OR FINISH FLOOR SEE DRAWINGS

MATCHLINE

CEILING HEIGHT/ IDENTIFICATION (XX)

AREA INFORMATION BOX (ROOM NAME; OCC. TYPE; X HR; AREA S.F.; FACTOR; OCC. #)

FINISH TRANSITION (XX2 XX1)

GRAPHIC SYMBOLS | 5

CLIENT
City of Santa Monica
Architecture Services
1437 4th Street, Suite 300
Santa Monica, CA 90401
(310) 458-2200
Miriam Mulder, Principal City Architect
Miriam.mulder@smgov.net
Tom Afschar,
Tom.Afschar@SMGOV.NET
Greg Mullen
Gmullen@SMGOV.NET
Claudia Fishler
Claudia.Fishler@SMGOV.NET

ARCHITECT
Koning Eizenberg Architecture Inc.
1454 25th Street
Santa Monica, CA 90404
(310) 828-6131
(310) 828-0719 fax
Julie Eizenberg, Principal
jeizenberg@kearch.com
Nathan Bishop, Senior Associate
nbishop@kearch.com
Jennifer Rios, Project Manager
jrios@kearch.com

LANDSCAPE ARCHITECT
Spurlock Poirier
2122 Hancock Street
San Diego, CA 92110
(619) 681-0090
(619) 681-0096 fax
Andrew Spurlock, Principal
aspurlock@spl@land.com

SURVEYOR
JMC2
411 N. Harbor Blvd., Suite 201
San Pedro, CA 90731
(310) 241-6550
(310) 320-8871 fax
Mark Barsoum, Survey Manager
mbarsoum@jmc-2.com

GEOTECHNICAL
GeoDesign
2121 S. Towne Center Place,
Suite 130
Anaheim, CA 92806
(714) 634-3701
Christopher Zadoorian, Principal Engineer
czadoorian@geodesigninc.com

CIVIL
KPFF
6080 Center Dr., Suite 700
Los Angeles, CA 90045
(310) 665-2800
(310) 665-9075
Jeff Gavazza, Principal
jgavazza@kpff@la.com

STRUCTURAL
Thornton Tomasetti
6080 Center Drive, Suite 260
Los Angeles, CA 90045
310.665.0010
310.665.0101 fax
Bruce Gibbons, Principal
bgibbons@thorntontomasetti.com
Lee Ishida, Senior Project Engineer
RIshida@ThorntonTomasetti.com

MECHANICAL/PLUMBING/ELECTRICAL
GLUMAC
617 W. 7th Street, 5th Floor
Los Angeles, CA 90017
(213) 239-8866
(213) 239-8816 fax
Jacob Chan
Edwin Lee
Henry Lam

LIBRARY CONSULTANT
Linda Demmers
2414 Chislehurst Dr.
Los Angeles, CA 90027
(323) 668-0404
Linda Demmers, Principal
xlibrs@earthlink.net

ENVIRONMENTAL GRAPHICS
Newsom Design
7906 West 4th Street
Los Angeles, CA 90048
(323) 658-7955
Caro Newsom, Principal
carol@newsomdesign.com
Lucy Gonzalez, Senior Associate
lucy@newsomdesign.com

LIGHTING DESIGN
Lighting Design Alliance
2830 Temple Ave.
Long Beach, CA 90806
(562) 989-3843
Archit Jain
ajain@lightingdesignalliance.com

ACOUSTIC
Veneklasen & Associates
1711 Sixteenth Street
Santa Monica, CA 90404
(310) 450-1733
Aaron Betit, Senior Associate
abetit@veneklasen.com

LEED CONSULTANT
Brightworks
150 California St. STE. 3
San Francisco, CA
(310) 452-5050
Annie Argento, Sustainability Advisor
annie.argento@brightworks.net

COST ESTIMATING
C.P. O'Halloran Associates Inc.
2659 Townsgate Road, #213
Westlake Village, CA 91361
(805) 494-3703
Ciaran O'Halloran, Principal
cpohalloran@cpohalloran.com

PROJECT TEAM | 3

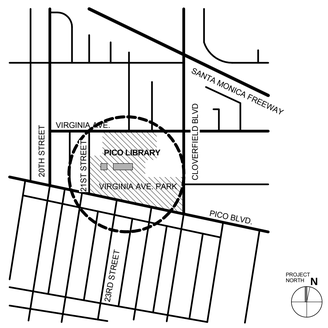

VICINITY MAP | 1

PICO BRANCH LIBRARY

2201 Pico Blvd.
Santa Monica, CA 90404

PROJECT

KoningEizenbergArchitecture
1454 25th St, Santa Monica, CA 90404
310.828.6131 info@kearch.com
310.828.0719 fax www.kearch.com

ARCHITECT'S PROJECT NO.
1001

ARCHITECT

All designs, ideas, arrangements and plans indicated by these drawings are the property and copyright of the Architect and shall neither be used on any other work nor be disclosed to any other person for any use whatsoever without written permission.

Koning Eizenberg Architecture and/or its principals and employees waives any and all liability or responsibility for problems that may occur when these plans, drawings, specifications, and/or designs are followed without the professional's guidance with ambiguities, or conflicts which are alleged.

CONSULTANT

City of Santa Monica Architecture Services
1437 4TH STREET, SUITE 300
SANTA MONICA, CA 90401
TEL. (310) 458-2205
FAX. (310) 399-1541
architecture@smgov.net

DATE : 20
SUBMITTED BY :

DATE : 20
APPROVED BY :
Miriam Mulder,
Architecture Services Manager
CITY OF SANTA MONICA
DEPARTMENT OF PUBLIC WORKS

REVIEWED BY : DATE : 20

REVIEWED BY : DATE : 20

REVIEWED BY : DATE : 20

CITY CLIENT

NO.	DATE	BY	DESCRIPTION

REVISIONS

ISSUE
65% CONSTRUCTION DOCUMENTS / BID SET

DATE
01/23/2012

DRAWING NO. **6693**

SHEET OF SHEETS

SHEET TITLE
PROJECT INFORMATION

SHEET NO.
A0.10

SHEET OF

DWG NO. - -

TITLE OF PROJECT

COPY

CITY OF SANTA MONICA
CITY PLANNING DIVISION

City of Santa Monica

ARCHITECTURAL REVIEW BOARD STATEMENT OF OFFICIAL ACTION

PROJECT

CASE NUMBER:	ARB 11-354
LOCATION:	2200 Virginia Avenue
APPLICANT:	City of Santa Monica
CASE PLANNER:	Steve Mizokami, Associate Planner
REQUEST:	Approval of design, colors and materials for the new Pico Branch Library located within Virginia Avenue Park.
CEQA STATUS:	The project is exempt from the provisions of the California Environmental Quality Act (CEQA) pursuant to Section 15061 (b)(3) in that it can be seen with certainty that the proposed project does not have the potential for causing a significant effect on the environment in that the project involves the review of design-related issues associated with the proposed structures in terms of general architectural design, proposed materials, colors, mechanical screening and/or landscape plans.

ARCHITECTURAL REVIEW BOARD ACTION

October 17, 2011 Approved with conditions.

_____ Denied.

_____ Other.

EFFECTIVE DATE OF ACTION: October 28, 2011

Each and all of the findings and determinations are based on the competent and substantial evidence, both oral and written, contained in the entire record relating to the Project. All summaries of information contained herein or in the findings are based on the substantial evidence in the record. The absence of any particular fact from any such summary is not an indication that a particular finding is not based in part on that fact.

FINDINGS:

A. The plan for the proposed building or structure is expressive of good taste, good design, and in general contributes to the image of Santa Monica as a place of beauty, creativity and individuality in that the proposed library is contemporary in architectural style, is pedestrian-oriented, and includes expansive clear glazing panels along the south, east, and west walls that provide natural daylight and a visual connection to the park. The building includes a dynamic folded roof design with large projecting roof overhangs providing shaded areas for library and park visitors. The south building elevation would be shaded with a fabric canopy structure, providing additional shading essential for Farmers Market patrons. In addition to these sun-shading elements, a series of landscape improvements would further activate the areas surrounding the library facility. An amphitheater with terraced steps is designed adjacent to the south elevation of the community room that can accommodate small performances and seating for approximately 15 people, providing creativity site design. The proposed lighting plan would provide visitors with a sense of space and direction during evening hours, and would help display the leisurely areas surrounding the library building.

B. The proposed building or structure is not of inferior quality such as to cause the nature of the local neighborhood or environment to materially depreciate in appearance and value in that high quality material as detailed in the application submittal and as presented to the Architectural Review Board will be used.

C. The proposed design of the building or structure is compatible with developments on land in the general area in that the architectural design, proportions, scale, and materials of the proposed library buildings are consistent with the existing park buildings. The folded roof design was influenced by the roof designs found on the existing Park Center and Patio building on-site, providing a design compatibility with the existing structures. Furthermore, the building's expansive clear glazing panels would provide a strong visual connection between the library and park. The project would provide additional shading and leisurely areas, further enhancing the enjoyment of the park for visitors. The building's design establishes a relationship between the library use and park settings that would further enhance services for the neighborhood.

D. The proposed development conforms to the effective guidelines and standards adopted pursuant to Chapter 9.32 – *Architectural Review Board*, and all other applicable ordinances insofar as the location and appearance of the buildings and structures are involved. Specifically, the location and appearance of the

buildings and structures comply with required findings set forth in Chapter 9.32, as documented by the Architectural Review Board, and as conditioned, the plans will fully comply with all applicable regulations prior to the issuance of a building permit.

CONDITIONS:

1. This approval shall expire when the administrative or discretionary entitlements, not including any Subdivision Map approvals, previously granted for the project have lapsed. If no such entitlements have been granted, this approval shall expire eighteen (18) months from its effective date, unless appealed.

2. Prior to the issuance of a building permit, the applicant shall demonstrate that the plans comply with all applicable provisions of the Zoning Ordinance. Significant changes to a project's design shall require review and approval of the Architectural Review Board. Minor changes may be approved administratively pursuant to all applicable guidelines.

The Architectural Review Board's approval, conditions of approval, or denial of this application may be appealed to the Planning Commission if the appeal is filed with the Zoning Administrator within ten consecutive days following the date of the Architectural Review Board's determination in the manner provided in Chapter 9.32, Section 9.32.160.

VOTE

Ayes:	Burton, Ellis, Griffin, Pearson, Robb, Chairperson Folonis
Nays:	None
Abstain:	None
Absent:	Rothman

NOTICE

This decision may be appealed to the Planning Commission within ten (10) calendar days from the date of action, pursuant to SMMC Section 9.32.160. If the decision is not appealed, an application for plan check review may be submitted with the Building Division for the project.

Acknowledgement by Permit Holder
I hereby acknowledge that the building design, colors and materials are as specified in the final application submittal and as approved by the Architectural Review Board, or Planning Commission on appeal, are the approved plans. Any deviation from the approved plans, including, but not limited to changing any aspect of the design, colors, materials, finish, or adding new materials, features, equipment, or signs requires the prior approval of the Architectural Review Board. I agree to have the construction plans prepared in compliance with all pertinent details of the ARB approved plans. In the event of a conflict, the ARB approved Plans shall prevail over the construction plans. I

further acknowledge that failure to construct the project pursuant to the ARB approved plans is grounds for withholding final inspection and occupancy until such discrepancy(s) are resolved.

Print Name and Title _____ Date _____

Applicant / Authorized Representative Signature _____

I hereby certify that this Statement of Official Action accurately reflects the final determination of the Architectural Review Board of the City of Santa Monica.

Michael Folonis, Chairperson _____ Date 10·31·2011

F:\CityPlanning\Share\ARB\Stoas\2011\ARB11-354.doc

PICO BRANCH LIBRARY

2201 Pico Blvd.
Santa Monica, CA 90404

PROJECT

KoningEizenbergArchitecture
1454 29th St, Santa Monica, CA 90404
310.828.6131 info@kearch.com
310.828.0719 fax www.kearch.com

ARCHITECT'S PROJECT NO.
1001

ARCHITECT

All designs, ideas, arrangements and plans indicated by these drawings are the property and copyright of the Architect and shall neither be used on any other work nor be disclosed to any other person for any use whatsoever without written permission.

Koning Eizenberg Architecture and/or its principals and employees waives any and all liability or responsibility for problems that may occur when these plans, drawings, specifications, and/or designs are followed without the professional's guidance with ambiguities, or conflicts which are alleged.

CONSULTANT

City of Santa Monica Architecture Services
1437 4TH STREET, SUITE 300
SANTA MONICA, CA 90401
TEL. (310) 458-2205
FAX. (310) 399-1541
architecture@smgov.net

SUBMITTED BY : _____ DATE : _____ 20 __

APPROVED BY : Miriam Mulder, Architecture Services Manager _____ DATE : _____ 20 __

CITY OF SANTA MONICA
DEPARTMENT OF PUBLIC WORKS

REVIEWED BY : _____ DATE : _____ 20 __

REVIEWED BY : _____ DATE : _____ 20 __

REVIEWED BY : _____ DATE : _____ 20 __

CITY CLIENT

NO.	DATE	BY	DESCRIPTION

REVISIONS

ISSUE
65% CONSTRUCTION DOCUMENTS / BID SET

DATE
01/23/2012

DRAWING NO. **6693**

SHEET OF SHEETS

SHEET TITLE
LETTERS OF APPROVAL

SHEET NO.
A0.20

SHEET OF

DWG NO. -

TITLE OF PROJECT

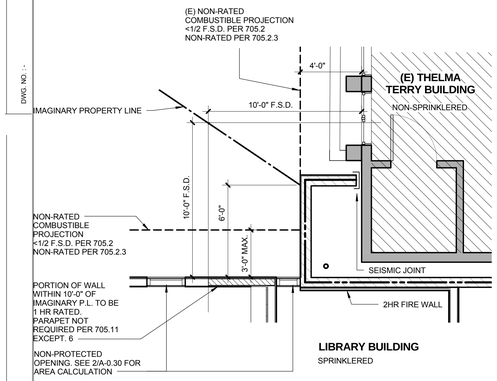

ESTABLISHED PER CBC 706.5.1 METHOD 2
F.S.D.= FIRE SEPARATION DISTANCE PER TABLE 602

FIRE WALL - WEST TERMINATION

0 1' 2' 4' | 1/4" = 1'-0" | 5

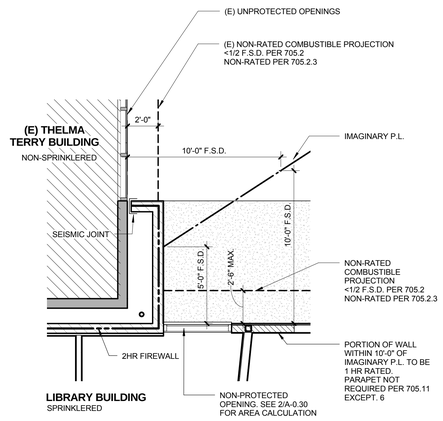

ESTABLISHED PER CBC 706.5.1 METHOD 2
F.S.D.= FIRE SEPARATION DISTANCE PER TABLE 602

FIREWALL - EAST TERMINATION

0 1' 2' 4' | 1/4" = 1'-0" | 4

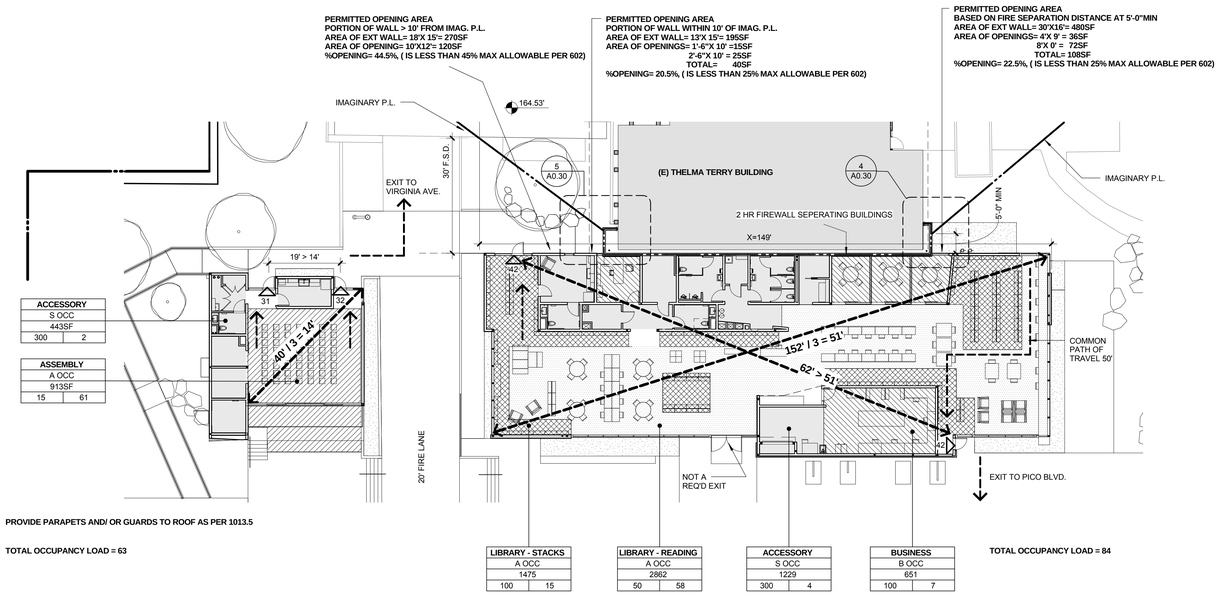

PROVIDE PARAPETS AND/ OR GUARDS TO ROOF AS PER 1013.5

TOTAL OCCUPANCY LOAD = 63

FRONTAGE INCREASE CALCULATION
If= F/P- 0.25/W/30 (W= 30. ONLY COUNTING FRONTAGE >30')
F= BUILDING PERIMETER w/ FRONTAGE >30' (P-X ABOVE)= 379'
P= BUILDING PERIMETER= 528'
If= 379/528 - .25= .467

MAIN FLOOR PLAN - OCCUPANCY AND EXIT DIAGRAM

0 4' 8' 16' | 1/16" = 1'-0" | 2

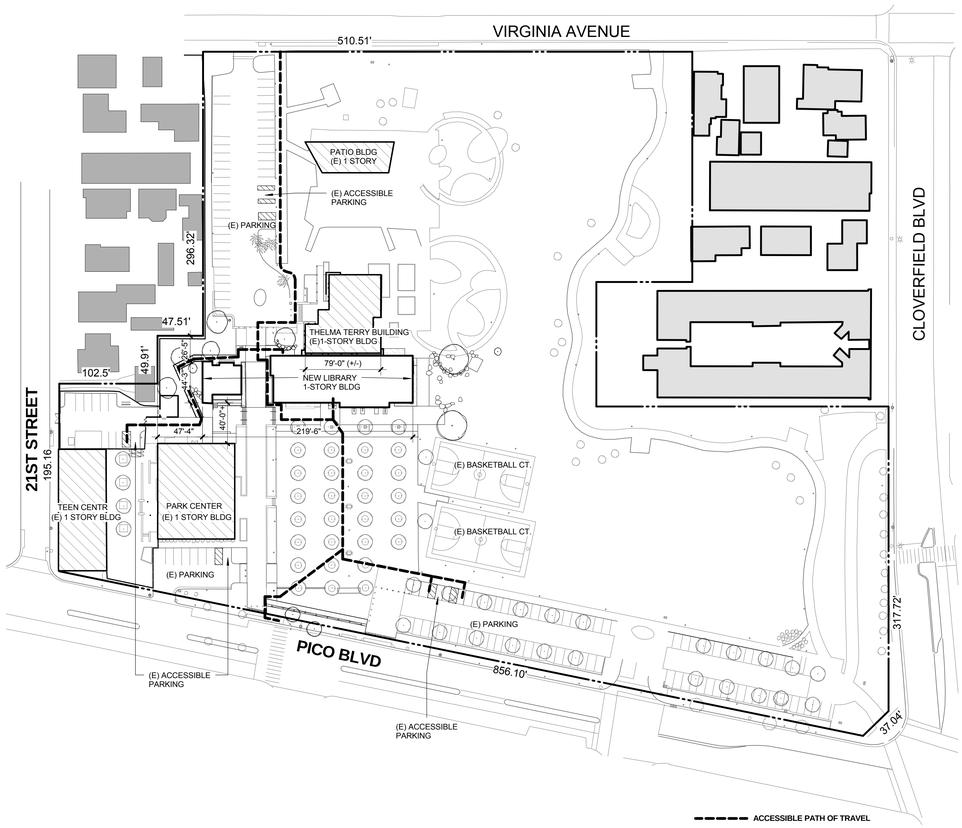

PLOT PLAN & ACCESSIBLE ROUTES 1/64"= 1'-0"

3

TABLE 508.2.5	
STORAGE ROOM < 100 SF	1 HR SEPERATION OR PROVIDE SPRINKLERS

OCCUPANCY SEPARATION
NON SEPERATED OCCUPANCIES PER 508.3

TABLE 601 FIRE RESISTANCE RATINGS		
	TYPE VB	
PRIMARY STRUCTURAL FRAME: FOOTNOTE A	0	
BEARING WALLS		
EXTERIOR	0	
INTERIOR	0	
NON-BEARING WALLS		
EXTERIOR	0	
INTERIOR	0	
FLOOR CONSTRUCTION & SECONDARY MEMBERS	0	
ROOF CONSTRUCTION & SECONDARY MEMBERS	0 0	

TABLE 602		
FIRE RATING OF EXTERIOR WALLS		
FIRE SEP. DISTANCE	CONSTRUCTION TYPE	OCC. A B C
X ≤ 5'	ALL	1 HR
5' ≤ x ≤ 10'	VB	1 HR
10' ≤ x ≤ 30'	VB	0

TABLE 705.8		
EXTERIOR WALL OPENINGS		
x < 3'	UNPROTECTED SPRINKLERED	NOT PERMITTED
3' - 5'	UNPROTECTED SPRINKLERED	15 %
5' -10'	UNPROTECTED SPRINKLERED	25 %
10' - 15'	UNPROTECTED SPRINKLERED	45 %

TABLE 1016.1		
MAX TRAVEL DISTANCE WITH SPRINKLER		
TYPE	A - E	250'
	B	300'

TABLE 1018.1 CORRIDOR RATING		
A - B	WITHOUT SPRINKLERED	NO RATING REQ'D

COMMON PATH OF EGRESS TRAVEL		
MAX TRAVEL DISTANCE WITH SPRINKLER		
TYPE	A	75'
	B	100'

CODE ANALYSIS:

1. NEW BUILDING IS (TYPE V B SPRINKLERED) SEPERATED FROM (E) THELMA TERRY BY 2 HR FIREWALL PER CBC 706 TABLE 706.4 FOOTNOTE a.
2. LIMITED WORK WILL BE PERFORMED TO (E) "THELMA TERRY" BUILDING INCLUDING CUTTING BACK (E) FASCIA, RELOCATING UTILITIES, CLOSING FF (E) WINDOWS, ADDING (N) SKYLIGHTS & SOME ADA IMPROVEMENTS.
3. AREA OF LIBRARY = 8,900 SF
   TABULAR BUILDING AREA PER 503 FOR A-3 OCC = 6,000SF

   AREA INCREASE FOR AUTOMATIC SPRINKLER SYSTEM PER 506.3 = 300%

   FRONTAGE INCREASE (EQUATION 5.2) If= .467

   ALLOWABLE BUILDING AREA(EQUATION 5.1)
   = 6000 SF +(6000 x 3)+ (6000x .467)= 26,802SF
4. ENTIRE BUILDING IS CONSIDERED A NON-SEPARATED OCCUPANCY PER 508.3

PLUMBING REQUIREMENTS			
TABLE 4-1 2010 CA PLUMBING CODE (LOAD FACTOR DETERMINED BY TABLE 10-A)			
OCCUPANCY	SQ. FT.	LOAD FACTOR	100% M&F
GROUP A- ASSEMBLY	(SEE DIAGRAM ABV)		122
GROUP S- STORAGE			4
GROUP B- BUSINESS			7
TOTAL			133

FIXTURES REQUIRED (ASSEMBLY OR PUBLIC BUILDING)				
	WC	URINAL	LAV	DF
MALE OCC = 67	1	1	1	1
FEMALE OCC = 67	4	0	1	

FIXTURES PROVIDED (ASSEMBLY OR PUBLIC BUILDING)				
	WC	URINAL	LAV	DF
MALE OCC = 67	1	2	1	2
FEMALE OCC = 67	3	0	1	
UNISEX	3	0	3	
TOTAL	7	2	5	

CODE DIAGRAM LEGEND

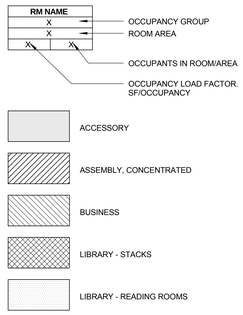

CODE ANALYSIS/ INFORMATION

1

PICO BRANCH LIBRARY

2201 Pico Blvd.
Santa Monica, CA 90404

PROJECT

KoningEizenbergArchitecture
1454 25th St, Santa Monica, CA 90404
310.828.6131 info@kearch.com
310.828.0719 fax www.kearch.com

ARCHITECT'S PROJECT NO.
1001

ARCHITECT

All designs, ideas, arrangements and plans indicated by these drawings are the property and copyright of the Architect and shall neither be used on any other work nor be disclosed to any other person for any use whatsoever without written permission.

Koning Eizenberg Architecture and/or its principals and employees waives any and all liability or responsibility for problems that may occur when these plans, drawings, specifications, and/or designs are followed without the professional's guidance with ambiguities, or conflicts which are alleged.

CONSULTANT

City of Santa Monica Architecture Services
1437 4TH STREET, SUITE 300
SANTA MONICA, CA 90401
TEL. (310) 458-2205
FAX. (310) 399-1541
architecture@smgov.net

DATE : 20
SUBMITTED BY :

DATE : 20
APPROVED BY :
Miriam Mulder,
Architecture Services Manager
CITY OF SANTA MONICA
DEPARTMENT OF PUBLIC WORKS

REVIEWED BY : DATE : 20

REVIEWED BY : DATE : 20

REVIEWED BY : DATE : 20

CITY CLIENT

NO.	DATE	BY	DESCRIPTION

REVISIONS

ISSUE
65% CONSTRUCTION DOCUMENTS / BID SET

DATE
01/23/2012

DRAWING NO.
6693

SHEET OF SHEETS

SHEET TITLE
CODE ANALYSIS & DIAGRAMS

SHEET NO.
A0.30

TITLE OF PROJECT

DWG. NO. -

SHEET OF

SHEET OF

DWG. NO. : -

TITLE OF PROJECT :

GENERAL NOTES

1. ALL GRADING SHALL BE ACCOMPLISHED IN ACCORDANCE WITH THE SANTA MONICA BUILDING CODE AND THE GEOTECHNICAL REPORT PREPARED BY GEODESIGN, INC., FILE NO. 2119, DATED OCTOBER 8, 2010. ALL EXCAVATED MATERIAL RESULTING FROM GRADING SHALL BE REMOVED FROM THE SITE BY THE CONTRACTOR.

2. ALL CONSTRUCTION AND DETAILS SHALL BE COMPLETED IN FULL COMPLIANCE WITH THE SANTA MONICA BUILDING CODE AND ALL OTHER APPLICABLE CODES AND AMENDMENTS ENACTED BY THE CITY OF SANTA MONICA AND/OR COUNTY OF LOS ANGELES.

3. IF ANY CONFLICT IN INFORMATION IS DISCOVERED WITH REFERENCES TO STANDARDS OF PERFORMANCE OR CONSTRUCTION OR WORKMANSHIP, THE MORE ONEROUS PROVISION SHALL BE DEEMED TO APPLY UNLESS OTHERWISE AGREED TO BY THE ARCHITECT.

4. THE CONTRACTOR (AND HIS SUB-CONTRACTORS) SHALL STUDY AND COMPARE THE CONTRACT DOCUMENTS AND SHALL AT ONCE REPORT TO THE ARCHITECT IN WRITING, ALL INCONSISTENCIES, ERRORS OR OMISSIONS DISCOVERED AND VERIFY ALL DIMENSIONS ON SITE PRIOR TO COMMENCING THE WORK. IF THE CONTRACTOR PROCEEDS WITH ANY OF THE WORK SO AFFECTED WITHOUT WRITTEN INSTRUCTIONS OF THE ARCHITECT, THE CONTRACTOR SHALL MAKE GOOD AT HIS OWN COST ANY RESULTING ERROR, DAMAGE, OR DEFECTS OR TIME DELAYS SO CAUSED. THE CONTRACTOR SHALL PERFORM NO PORTION OF THE WORK WITHOUT CONTRACT DOCUMENTS OR, WHERE REQUIRED, APPROVED SHOP DRAWINGS, PRODUCT DATA OR SAMPLES BEING AVAILABLE ON SITE FOR WORKERS TO REFER TO, FOR SUCH PORTION OF THE WORK.

5. CONTRACTOR SHALL PROVIDE A BLANKET ONE-YEAR GUARANTEE FOR THE TOTAL JOB WITH SEPARATE GUARANTEES FOR SPECIFIC TRADES/EQUIPMENT ITEMS, WITH THE NAMES OF LOCAL REPRESENTATIVES TO BE CONTRACTED FOR SERVICE. THE CONTRACTOR SHALL PROVIDE OPERATING AND MAINTENANCE BROCHURES AS REQUIRED. THE GUARANTEE SHALL COMMENCE WHEN THE WORK IS DEEMED SUBSTANTIALLY COMPLETE BY THE ARCHITECT.

6. CONTRACTOR SHALL PROVIDE ONE MARKED UP SET OF DRAWINGS INDICATING ALL DIFFERENCES, CHANGES, ETC., AND ACTUAL LOCATIONS OF CONCEALED WORK, BEFORE ARCHITECT'S FINAL INSPECTION.

7. WHERE SPECIFIED ITEMS LIST ONE PRODUCT ARE MENTIONED, THE CONTRACTOR MAY SUBMIT ALTERNATE MATERIALS FOR APPROVAL BY THE OWNER AND THE ARCHITECT. SUBMISSION PACKAGE SHALL CONTAIN BROCHURE, CUT SHEETS, SPECIFICATIONS, COSTS, AVAILABILITY, REFERENCES, ETC. CONTRACTOR SHALL REIMBURSE ARCHITECT FOR TIME SPENT EVALUATING ALTERNATIVES OR SUBSTITUTIONS THAT ARE SUBMITTED AFTER PROJECT CONSTRUCTION HAS COMMENCED.

8. DO NOT SCALE DRAWINGS.

9. CONTRACTOR SHALL CONSULT WITH REPRESENTATIVES OF APPLICABLE UTILITIES, INCLUDING BUT NOT LIMITED TO GAS, WATER, POWER, SEWER, TELEPHONE, AND CABLE TELEVISION AND DETERMINE EXACT LOCATIONS AND AVAILABILITY OF UTILITIES AND DETERMINE CONDITION OF EXISTING SERVICE PRIOR TO COMMENCING WORK OR CONNECTING UTILITIES. CONTRACTOR SHALL LOCATE UTILITIES BY POTHOLING PRIOR TO BEGINNING CONSTRUCTION.

10. CONTRACTOR TO STAKE OUT ALL WORKS AS SHOWN ON PLANS, CONFIRM EXISTING CONDITIONS AND PROPERTY LINE LOCATIONS, AND VERIFY COMPLIANCE WITH SETBACKS AND CLEARANCES REQUIRED BY CODE.

11. IMPROVEMENTS ON THE SITE, WORK IN PROGRESS, STORED MATERIALS, AND PUBLIC AND PRIVATE IMPROVEMENTS ON PROPERTY ADJACENT TO THE SITE SHALL BE PROTECTED BY THE CONTRACTOR FROM DAMAGE ARISING FROM THE WORK. ALL DAMAGE SO OCCURRING SHALL BE REPAIRED OR REPLACED BY THE CONTRACTOR AT NO COST TO OWNER.

12. STRUCTURAL OBSERVATION BY THE STRUCTURAL ENGINEER ARE REQUIRED BY CITY OF SANTA MONICA. A WRITTEN STATEMENT SHALL BE GIVEN TO THE BUILDING OFFICIAL, STATING THAT SITE VISITS HAVE BEEN MADE AND WHETHER OR NOT ANY OBSERVED DEFICIENCIES HAVE BEEN CORRECTED TO CONFORM TO THE APPROVED PLANS AND SPECIFICATIONS.

CONSTRUCTION

1. ALL WOOD CONSTRUCTION SHALL BE 6" MINIMUM ABOVE ADJACENT FINISH GRADE UNLESS LUMBER IS TREATED FOR SUCH APPLICATIONS.

2. CONTRACTOR SHALL ERECT AND MAINTAIN TEMPORARY BARRICADES AS NEEDED FOR PROTECTION AGAINST ACCIDENT, AND SHALL CONTINUOUSLY MAINTAIN ADEQUATE PROTECTION OF HIS WORK AND THE OWNER'S PROPERTY FROM DAMAGE OR LOSS ARISING IN CONNECTION WITH CONSTRUCTION. THE CONTRACTOR SHALL OBTAIN OWNER'S REQUIREMENTS FOR SUCH BARRICADES.

3. CONTRACTOR SHALL CLEAN ALL GLASS, REMOVE STAINS, SPOTS, MARKS AND DIRT FROM ALL WORK, CLEAN ALL HARDWARE, REMOVE PAINT SPOTS AND SMEARS FROM ALL SURFACES, CLEAN ALL FIXTURES AND FLOORS AND ANY OTHER ITEMS CAUSED BY CONSTRUCTION ACTIVITIES.

4. ELECTRIC POWER, PHONES, AND TEMPORARY TOILET FACILITIES ARE TO BE PROVIDED BY THE CONTRACTOR AS NECESSARY AND AS REQUIRED BY CODE.

5. NO PART OF THE STRUCTURE SHALL BE OVERLOADED BEYOND ITS SAFE CARRYING CAPACITY BY THE PLACING OF MATERIALS, EQUIPMENT, TOOLS, MACHINERY OR ANY OTHER ITEM.

6. CONTRACTOR SHALL PROTECT FLOOR SURFACES FROM DAMAGE AND EQUIP MOBILE EQUIPMENT WITH PNEUMATIC TIRES.

7. WHEN DEMOLITION IS REQUIRED ON SITE: 1) ALL DEBRIS SHALL BE WET AT THE TIME OF HANDLING TO PREVENT DUST; 2) NO STRUCTURAL MEMBER IN ANY STORY SHALL BE DEMOLISHED UNTIL THE STORY ABOVE IS COMPLETELY REMOVED; 3) FREE FALL DUMPING OVER EXTERIOR WALL WILL NOT BE ALLOWED FOR HEIGHT MORE THAN 25 FT.

8. ALL METAL FLASHING, GUTTER, AND DOWNSPOUT JOINTS SHALL BE LAPPED, JOINED, AND SEALED SO THAT THEY ARE WATER TIGHT AND PROVIDE FOR POSITIVE WATER FLOW.

9. CONTRACTOR SHALL COORDINATE LOCATION OF ALL UNDERGROUND UTILITIES AND CONNECTION WITH THE RELEVANT UTILITY COMPANIES.

10. CONTRACTOR SHALL PREPARE, SUBMIT AND HAVE CITY OF SANTA MONICA APPROVE ALL NECESSARY CONSTRUCTION STAGING, SITE ACCESS AND ENVIRONMENTAL PROTECTION PLANS.

11. THE CONSTRUCTION SHALL NOT RESTRICT A FIVE-FOOT CLEAR & UNOBSTRUCTED ACCESS TO ANY WATER OR POWER DISTRIBUTION FACILITIES (POWER POLES, PULL-BOXES, TRANSFORMERS, VAULTS, PUMPS, VALVES, METERS, APPURTENANCES, ETC.) OR TO THE LOCATION OF THE HOOK-UP. THE CONSTRUCTION SHALL NOT BE WITHIN TEN FEET OF ANY POWER LINES - WHETHER OR NOT THE LINES ARE LOCATED ON THE PROPERTY. FAILURE TO COMPLY MAY CAUSE CONSTRUCTION DELAYS AND/OR ADDITIONAL EXPENSES.

GLAZING

1. ALL GLASS DOORS AND WINDOWS SHALL BE CERTIFIED AND LABELED TO SHOW COMPLIANCE WITH AIR INFILTRATION STANDARDS OF 1977 ANSI A134.1, A134.2, A134.3, AND A134.4.

2. GLASS DOORS, ADJACENT PANELS, AND ALL GLAZED OPENINGS WITHIN 18" OF THE ADJACENT FLOOR SHALL BE OF GLASS APPROVED FOR IMPACT HAZARD. 91.1711(D) (HSC 25997). ALL GLAZING TO BE FULLY TEMPERED GLASS.

PLUMBING

1. ALL PLUMBING AND DRAIN LINES INDICATED ON THE PLANS IN CEILING & WALLS TO BE CAST IRON.

2. ALL PLUMBING PENETRATIONS THROUGH WALLS WHICH REQUIRE PROTECTED OPENINGS (OCCUPANCY SEPARATION WALLS, FIRE WALLS, RATED CORRIDOR WALLS AND WALLS TO CLOSE TO A REAL OR IMAGINARY PROPERTY LINE) ARE REQUIRED TO BE GALVANIZED OR CAST IRON PIPING.

3. CONTRACTOR SHALL VERIFY THAT COPPER WATER SUPPLY LINES ARE SIZED TO PROVIDE ACCEPTABLE PRESSURE AND VOLUME. CONTRACTOR SHALL CONNECT WASTE LINES TO SEWER AND PROVIDE CLEANOUTS AND VENTILATION AS REQUIRED BY THE UNIFORM PLUMBING CODE.

4. SEISMIC GAS SHUT OFF VALVES ARE TO BE INSTALLED ON EACH FUEL GAS LINE AT EACH METER.

5. PROVIDE ULTRA LOW FLUSH WATER CLOSETS FOR ALL NEW CONSTRUCTION.

SOUND

1. ALL PENETRATIONS INTO SOUND RATED PARTITIONS OR FLOOR-CEILING ASSEMBLIES WILL BE SEALED WITH APPROVED PERMANENT ACOUSTIC RESILIENT SEALANT.

2. ALL RIGID CONDUIT, DUCTS, PLUMBING PIPES, APPLIANCE VENTS LOCATED IN SOUND ASSEMBLIES SHALL BE ISOLATED FROM THE BUILDING CONSTRUCTION BY MEANS OF RESILIENT SLEEVES, MOUNTS OR MINIMUM 1/4" THICK APPROVED RESILIENT MATERIAL.

3. AN APPROVED PERMANENT AND RESILIENT ACOUSTICAL SEALANT WILL BE PROVIDED ALONG THE JOINT BETWEEN THE FLOOR AND THE SEPARATION WALLS

4. MINERAL FIBER INSULATION WILL BE INSTALLED IN JOIST SPACES WHEREVER PLUMBING PIPING OR DUCT PENETRATES A FLOOR-CEILING ASSEMBLY OR WHERE SUCH UNIT PASSES THROUGH THE PLANE OF THE FLOOR-CEILING ASSEMBLY FROM WITHIN A WALL. THE INSULATION SHALL BE INSTALLED TO A POINT 12" BEYOND THE PIPE OR DUCT.

5. ELECTRICAL OUTLET BOXES IN OPPOSITE FACES OF SEPARATION WALLS WILL BE SEPARATED HORIZONTALLY BY 24" AND BACK AND SIDES OF BOXES WILL BE SEALED WITH 1/8" RESILIENT SEALANT AND BACKED BY A MINIMUM OF 2" THICK MATERIAL FIBER INSULATION. TV, TELEPHONE AND INTERCOM OUTLETS MUST BE INSTALLED IN BOXES ACCORDINGLY.

INTERIOR ENVIRONMENT/ INTERIOR FINISHES

1. EVERY SPACE INTENDED FOR HUMAN OCCUPANCY SHALL BE PROVIDED WITH NATURAL LIGHT BY MEANS OF EXTERIOR GLAZED OPENINGS IN ACCORDANCE WITH SECTION 1205.2 OR SHALL BE PROVIDED WITH ARTIFICIAL LIGHT THAT IS ADEQUATE TO PROVIDE AN AVERAGE ILLUMINATION OF 10 FOOT-CANDLES OVER THE AREA OF THE ROOM AT A HEIGHT OF 30 INCHES ABOVE FLOOR LEVEL. (1205.1 AND 1205.3)

2. INTERIOR FINISH MATERIALS APPLIED TO WALL AND CEILINGS SHALL BE TESTED AS SPECIFIED IN SECTION 802. IN ADDITION, APPLICATION ARE TO BE IN ACCORDANCE WITH SECTION 803, 804, AND TABLE 803.9.

3. ANY DECORATIONS SHALL BE NONCOMBUSTIBLE OR FLAME-RETARDANT TREATED IN AN APPROVED MANNER (CURTAINS, DRAPES, SHADES, HANGINGS, ETC.)

ENERGY NOTES

1. THE REQUIREMENTS OF TITLE 24, PART 2, CHAPTER 2-53 HAVE BEEN REVIEWED AND THE DESIGN SUBMITTED CONFORMS WITH THESE REGULATIONS.

2. THE CONTRACTOR SHALL PROVIDE THE OWNER A LIST OF THE HEATING, COOLING, WATER HEATING, LIGHTING AND CONSERVATION OF SOLAR DEVICES INSTALLED IN THE BUILDING AND INSTRUCTIONS ON HOW TO USE THEM EFFICIENTLY.

3. A MAINTENANCE LABEL SHALL BE AFFIXED TO ALL EQUIPMENT REQUIRING PREVENTATIVE MAINTENANCE, AND A COPY OF THE MAINTENANCE INSTRUCTIONS SHALL BE PROVIDED FOR THE OWNER'S USE.

4. INSULATION SHALL BE CERTIFIED BY THE MANUFACTURER TO COMPLY WITH THE CALIFORNIA QUALITY STANDARDS FOR INSULATING MATERIAL.

5. AFTER INSTALLING INSULATION, THE INSTALLER SHALL POST IN A CONSPICUOUS LOCATION A CERTIFICATE SIGNED BY THE INSTALLER STATING THAT THE INSTALLATION IS CONSISTENT WITH THE PLANS AND SPECIFICATIONS FOR WHICH THE BUILDING PERMIT WAS ISSUED, AND CONFORMS WITH THE REQUIREMENTS OF CHAPTER 2-53. THE CERTIFICATE SHALL ALSO STATE THE MANUFACTURER'S NAME AND MATERIAL IDENTIFICATION, THE INSTALLED "R VALUE," AND, IF LOOSE-FILL INSULATION, THE MINIMUM INSTALLED WEIGHT PER SQ.FT. CONSISTENT WITH THE MANUFACTURER'S LABELED INSTALLED DESIGN DENSITY FOR THE DESIRED "R VALUE."

6. CEILING/ROOF SHALL BE INSULATED (AS PER 2-5352 [A]) BETWEEN FRAMING MEMBERS WITH INSULATION HAVING AN INSTALLED THERMAL RESISTANCE OF R-19 OR GREATER.

7. WOOD-FRAMED WALLS SHALL BE INSULATED BETWEEN FRAMING MEMBERS WITH INSULATION HAVING AN INSTALLED THERMAL RESISTANCE R-13 OR GREATER.

8. ALL DOORS AND WINDOWS BETWEEN CONDITIONED AND UNCONDITIONED SPACE SHALL BE FULLY WEATHER-STRIPPED.

9. ALL OPENINGS IN THE BUILDING ENVELOPE SUCH AS FRAME, FRAMING AND PANEL JOINTS, ELECTRICAL AND PLUMBING LINE OPENINGS, AND MASONRY/WOOD FRAMING JOINTS SHALL BE CAULKED OR OTHERWISE SEALED TO LIMIT WATER AND AIR INFILTRATION.

10. MANUFACTURED DOORS AND WINDOWS SHALL BE CERTIFIED AND LABELED INDICATING THAT THEY MEET THE INFILTRATION STANDARDS LISTED IN TABLE 2-53V, T-24, SECTION 2.

11. FAN OR OTHER EXHAUST SYSTEMS EXHAUSTING AIR FROM CONDITIONED SPACE TO THE OUTSIDE SHALL BE PROVIDED WITH BACKDRAFT DAMPERS TO PREVENT AIR LEAKAGE.

12. THERMOSTATICALLY CONTROLLED HEATING OR COOLING SYSTEMS SHALL HAVE AN AUTOMATIC THERMOSTAT WITH A CLOCK MECHANISM WHICH THE BUILDING OCCUPANT CAN MANUALLY PROGRAM TO AUTOMATICALLY SET BACK THE THERMOSTAT SET POINTS FOR AT LEAST TWO PERIODS WITHIN 24 HOURS.

13. WATER HEATER SIZE TO BE AS PER PLUMBING DRAWINGS.

14. STORAGE TYPE WATER HEATERS SHALL BE EXTERNALLY WRAPPED WITH INSULATION HAVING AN INSTALLED THERMAL RESISTANCE OF R-12 OR GREATER.

15. ALL SHOWERHEADS, LAVATORY FAUCETS AND SINK FAUCETS SHALL BE CERTIFIED BY THE MANUFACTURER AS COMPLYING WITH THE APPLICABLE CALIFORNIA APPLIANCE EFFICIENCY STANDARDS.

16. LAMPS USED IN LUMINAIRES FOR GENERAL LIGHTING IN KITCHENS AND BATHROOMS SHALL HAVE AN EFFICACY OF NOT LESS THAN 25 LUMENS PER WATT (I.E. FLUORESCENT). LUMINAIRES WHICH ARE THE ONLY LIGHTING IN A KITCHEN OR BATHROOM WILL BE CONSIDERED GENERAL LIGHTING. LIGHTING TO BE USED ONLY FOR SPECIFIC VISUAL TASKS OR DECORATIVE EFFECT ARE EXEMPT FROM THIS REQUIREMENT. SUCH EXEMPT LIGHTING INCLUDES LUMINAIRES THAT ARE MEANT TO LIGHT ONLY A SPECIFIC TASK AREA SUCH AS A KITCHEN COUNTER OR SINK, A DINING TABLE, OR A BATHROOM MIRROR.

17. A MECHANICAL VENTILATION SYSTEM IN LIEU OF OPERABLE WINDOWS IN THE BATHROOM, TOILET ROOM AND LAUNDRY, WHICH FURNISHES FIVE AIR CHANGES PER HOUR DIRECT TO THE OUTSIDE, IS REQUIRED.

18. AN APPROVED SEISMIC GAS SHUTOFF VALVE SHALL BE INSTALLED ON THE FUEL GAS LINE ON THE DOWN STREAM SIDE OF THE UTILITY METER AND BE RIGIDLY CONNECTED TO THE EXTERIOR OF THE BUILDING OR STRUCTURE CONTAINING THE FUEL GAS PIPING.

MEANS OF EGRESS

1. THE MEANS OF EGRESS ILLUMINATION SHOULD BE PROVIDED IN ACCORDANCE WITH SECTION 1006, IN ADDITION TO ANY OTHER CODE REQUIREMENTS.

2. EXIT SIGNS SHALL BE INTERNALLY OR EXTERNALLY ILLUMINATED.

3. EXIT SIGNS ILLUMINATED BY AN EXTERNAL SOURCE SHALL HAVE AN INTENSITY OF NOT LESS THAN 5 FOOT CANDLES (54 LUX).

4. INTERNALLY ILLUMINATED SIGNS SHALL BE LISTED AND LABELED AND SHALL BE INSTALLED IN ACCORDANCE WITH THE MANUFACTURER'S INSTRUCTIONS AND SECTION 2702.

5. EXIT SIGNS SHALL BE ILLUMINATED AT ALL TIMES.

6. EXIT SIGNS SHALL BE CONNECTED TO AN EMERGENCY POWER SYSTEM THAT WILL PROVIDE AN ILLUMINATION OF NOT LESS THAN 90 MIN. IN CASE OF PRIMARY POWER LOSS. (1011.2-1011.5.3)

7. EGRESS DOORS SHALL BE READILY OPENABLE FROM THE EGRESS SIDE WITHOUT THE USE OF A KEY OR SPECIAL KNOWLEDGE OR EFFORT. SEE 1008.1.8 FOR EXCEPTIONS.

8. DOOR HANDLES, LOCK AND OTHER OPERATING DEVICES SHALL BE INSTALLED AT A MIN. 34" AND A MAX 48" ABOVE FINISHED FLOOR.

9. POST A SIGN ADJACENT TO THE REQUIRED MAIN EXIT DOOR WITH 1" LETTERING STATING: "THIS DOOR TO REMAIN UNLOCKED DURING BUSINESS HOURS." MAIN EXIT ONLY.

10. ALL EGRESS DOOR OPERATION SHALL ALSO COMPLY WITH SECTION 1008.1.8 - 1008.1.8.6.

11. THE MEANS OF EGRESS, INCLUDING THE EXIT DISCHARGE, SHALL BE ILLUMINATED AT ALL TIMES THE BUILDING SPACE SERVED BY THE MEANS OF EGRESS IS OCCUPIED. THE MEANS OF EGRESS ILLUMINATION LEVEL SHALL NOT BE LESS THAN 1 FOOT-CANDLE AT THE WALKING SURFACE. (1006.1)

12. THE POWER SUPPLY FOR MEANS OF EGRESS ILLUMINATION SHALL NORMALLY BE PROVIDED BY THE PREMISES ELECTRICAL SUPPLY. IN THE EVENT OF POWER SUPPLY FAILURE, AN EMERGENCY ELECTRICAL SYSTEM SHALL AUTOMATICALLY ILLUMINATE THE FOLLOWING AREAS:
A. AISLES AND UNENCLOSED EGRESS STAIRWAYS IN ROOMS AND SPACES THAT REQUIRE TWO OR MORE MEANS OF EGRESS;
B. CORRIDORS, EXIT ENCLOSURES AND EXIT PASSAGEWAYS IN BUILDINGS REQUIRED TO HAVE TWO OR MORE EXITS.
C. EXTERIOR EGRESS COMPONENTS AT OTHER THAN THE LEVEL OF EXIT DISCHARGE UNTIL EXIT DISCHARGE IS ACCOMPLISHED FOR BUILDINGS REQUIRED TO HAVE TWO OR MORE EXITS.
D. INTERIOR EXIT DISCHARGE ELEMENTS, AS PERMITTED IN SECTION 1024.1, IN BUILDINGS REQUIRED TO HAVE TWO OR MORE EXITS.
E. EXTERIOR LANDINGS, AS REQUIRED BY SECTION 1008.1.5, FOR EXIT DISCHARGE DOORWAYS IN BUILDINGS REQUIRED TO HAVE TWO OR MORE EXITS.

13. THE EMERGENCY POWER SYSTEM SHALL PROVIDE POWER FOR A DURATION OF NOT LESS THAN 30 MINUTES AND SHALL CONSIST OF STORAGE BATTERIES, UNIT EQUIPMENT OR AN ON-SITE GENERATOR. THE INSTALLATION OF THE EMERGENCY POWER SYSTEM SHALL BE IN ACCORDANCE WITH SECTION 2702. (1006.3)

14. EMERGENCY LIGHTING FACILITIES SHALL BE ARRANGED TO PROVIDE INITIAL ILLUMINATION THAT IS AT LEAST AN AVERAGE OF 1 FOOT-CANDLE (11 LUX) AND A MINIMUM AT ANY POINT OF 0.1 FOOT-CANDLE (1 LUX) MEASURED ALONG THE PATH OF EGRESS AT FLOOR LEVEL. ILLUMINATION LEVELS SHALL BE PERMITTED TO DECLINE TO 0.6 FOOT-CANDLE (6 LUX) AVERAGE AND A MINIMUM AT ANY POINT OF 0.006 FOOT-CANDLE (0.6 LUX) AT THE END OF THE EMERGENCY LIGHTING TIME DURATION. A MAXIMUM-TO-MINIMUM ILLUMINATION UNIFORMITY RATIO OF 40 TO 1 SHALL NOT BE EXCEEDED.

FIRE PROTECTION/ FIRE ALARM

1. PROVIDE FIRE SPRINKLERS THROUGHOUT. THE SPRINKLER SYSTEM SHALL BE APPROVED BY S.M.F.D. PLUMBING DIVISION PRIOR TO INSTALLATION. SUBMIT DESIGN DRAWING FOR ARCHITECTS REVIEW AND APPROVAL PRIOR TO SUBMITTING FOR PERMITS.

2. PROVIDE A PORTABLE FIRE EXTINGUISHER WITH A RATING OF NOT LESS THAN 2-A OR 2-A10BC WITHIN 75 FEET TRAVEL DISTANCE TO ALL PORTIONS OF THE BUILDING ON EACH FLOOR, ALSO DURING CONSTRUCTION. (L.A.M.C. 57.140)

3. PROVIDE PORTABLE FIRE EXTINGUISHER WITH A RATING NOT LESS THAN 10BC FOR KITCHEN, ELECTRICAL ROOM, MECHANICAL ROOM, OR PARKING GARAGE.

4. PROVIDE ADDITIONAL FIRE EXTINGUISHERS AS REQUIRED BY FIRE DEPARTMENT FIELD INSPECTOR.

5. FIRE DEPARTMENT CONNECTIONS SHALL BE LOCATED ON ADDRESS SIDE OF BUILDING. SHOW LOCATION ON PLANS.

6. PROVIDE AN APPROVED FIRE ALARM SYSTEM

FIRE-RESISTANCE RATED CONSTRUCTION

1. PENETRATIONS IN A FIRE-RATED WALL SHALL BE PROTECTED BY AN APPROVED FIRE STOP MATERIAL IN ACCORDANCE WITH SECTION 712.3.1
A. STEEL, COPPER OR FERROUS PIPES OR CONDUITS MAY PENETRATE CONCRETE OR MASONRY WALLS WHERE THE PENETRATING ITEM IS A MAXIMUM 6-INCH DIAMETER AND THE AREA OF THE OPENING THROUGH THE WALL DOES NOT EXCEED 144 SQUARE INCHES
B. MEMBRANE PENETRATIONS OF MAXIMUM 2-HR FIRE-RESISTANCE RATED WALL AND PARTITIONS BY STEEL ELECTRICAL OUTLET BOXES NOT EXCEEDING 16 SQUARE INCHES ARE PERMITTED PROVIDED OPENINGS DO NOT EXCEED100 SQUARE INCHES FOR ANY 100 SQUARE FEEET OF WALL AREA. OUTLET BOXES ON OPPOSITE SIDES OF WALLS OR PARTITIONS MUST BE SEPARATED BY A HORIZONTAL DISTANCE OF 24 INCHES.
C. WHERE WALLS ARE PENETRATED BY OTHER MATERIALS OR WHERE LARGER OPENINGS ARE REQUIRED THAN PERMITTED IN (B) ABOVE, THEY MUST BE QUALIFIED BY TESTS CONDUCTED IN ACCORDANCE WITH SECTION 712.3.1.1

2. SMOKE AND FIRE DAMPERS MUST BE INSTALLED IN THE FOLLOWING LOCATIONS PER SECTIONS 716.3.1
A. DUCT PENETRATIONS OF FIRE BARRIERS, EXCEPT EXIT ENCLOSURES AND EXIT PASSAGEWAYS WHERE THEY ARE NOT ALLOWED TO PENETRATE (716.5.2)
B. DUCTS PENETRATING SHAFTS (716.5.3)
C. DUCTS PENETRATING FIRE PARTITIONS AND FIRE-RATED CORRIDOR WALLS. SEE EXCEPTION FOR STEEL DUCTS WITH NO OPENINGS INTO CORRIDOR (716.5.4)

SPECIAL HAZARDS

1. ROOF CONSTRUCTION SUCH AS TELEVISION ANTENNA, GUY WIRES, AND RAZOR RIBBON SHALL NOT PREVENT FIRE DEPARTMENT ACCESS OR EGRESS IN THE EVENT OF A FIRE (L.A.M.C. 57.12)
2. ROOF COVERING SHALL CONFORM TO THE BUILDING CODE

FARMER'S MARKET OPERATIONS

TBD

FIRE LANE EMERGENCY ACCESS

TBD

SECURITY NOTES

1. COORDINATE WITH THE CITY OF SANTA MONICA INFO SERVICES DEPARTMENT FOR INSTALLATION OF ALARM SYSTEMS.

2. DOOR STOPS OF IN-SWINGING DOORS SHALL BE OF ONE-PIECE CONSTRUCTION WITH THE JAMB OR BE PROVIDED WITH SOME DEVICE TO PREVENT THE DOOR FROM BEING OPENED SHOULD THE STOP BE REMOVED.

3. STOPS ON OUT-SWINGING DOORS TO BE ONE-PIECE CONSTRUCTION OR FASTENED WITH 3/4" SCREWS 6" O.C.

4. ALL PIN-TYPE HINGES ACCESSIBLE FROM THE OUTSIDE WHEN THE DOOR IS CLOSED SHALL HAVE NON-REMOVABLE HINGE PINS OR A MECHANICAL INTERLOCK TO PRECLUDE REMOVAL OF THE DOOR FROM THE EXTERIOR BY REMOVING THE HINGE PINS. IN ADDITION, THEY SHALL HAVE 1/4" MIN. STEEL JAMB STUD WITH 1/4" MIN. PROJECTION.

5. THE STRIKE PLATE FOR LATCHES AND THE HOLDING DEVICE FOR PROJECTING DEADBOLTS SHALL BE SECURED TO THE JAMB AND WALL FRAMING WITH 2" LONG SCREWS. (A) THE STRIKE PLATE FOR DEAD BOLTS ON ALL WOOD FRAMED DOORS SHALL BE CONSTRUCTED OF MINIMUM SIXTEEN U.S. GAUGE STEEL, BRONZE, OR BRASS AND SECURED TO THE JAMB BY A MINIMUM OF TWO SCREWS, WHICH MUST PENETRATE AT LEAST TWO INCHES INTO SOLID BACKING BEYOND THE SURFACE TO WHICH THE STRIKE IS ATTACHED.

6. ALL EXTERIOR DOORS SHALL BE FLUSH-TYPE HOLLOW METAL OR WOOD DOORS 1-3/4" THICK WITH SOLID CORE CONSTRUCTION, OR FULLY TEMPERED GLASS IF GLASS, AND SHALL BE INSTALLED WITH DEAD LOCKING LATCHES. DEADBOLTS SHALL HAVE A MINIMUM 1" THROW AND A MINIMUM 5/8" EMBEDMENT (STRAIGHT TYPE) AND SHALL CONTAIN HARDENED INSERTS. LOCKS SHALL BE FLUSH, KEY-OPERATED CYLINDERS ON THE EXTERIOR AND SHALL BE OPENABLE WITHOUT KEY, SPECIAL KNOWLEDGE, OR SPECIAL EFFORT ON THE INTERIOR.

7. DOOR JAMBS SHALL BE INSTALLED WITH SOLID BACKING IN SUCH A MANNER THAT ANY OPEN SPACE BETWEEN TRIMMERS AND WOOD DOOR JAMBS SHALL BE SOLID SHIMMED BY A SINGLE PIECE EXTENDING NOT LESS THAN TWELVE INCHES ABOVE AND BELOW THE STRIKE PLATE.

8. TRIMMERS SHALL BE FULL DOOR LENGTH WITH SOLID BACKING AGAINST SOLE AND HEADER PLATES.

9. HORIZONTAL BLOCKING SHALL BE PLACED BETWEEN STUDS AT LOCK STRIKE HEIGHT FOR 3 STUD SPACES

10. DOUBLE DOORS (INACTIVE LEAFS) SHALL BE SECURED WITH BOTH HEAD AND BASE FLUSH BOLTS WITH A MINIMUM 5/8" EMBEDMENT.

11. NOT LESS THAN THREE FOUR AND ONE-HALF INCH STEEL BUTT HINGES SHALL BE SYMMETRICALLY FASTENED TO BOTH THE DOOR AND FRAME WITH NOT LESS THAN FOUR NO. 9 BY THREE-FOURTHS-INCH WOOD SCREWS OR TO METAL WITH NOT LESS THAN FOUR NO. 8 MACHINE SCREWS.

12. KEYING REQUIREMENTS:UPON OCCUPANCY BY THE OWNER OR PROPRIETOR, EACH SINGLE UNIT IN A TRACT OR COMMERCIAL DEVELOPMENT, CONSTRUCTED UNDER THE SAME GENERAL PLAN, SHALL HAVE LOCKS USING COMBINATIONS WHICH ARE INTERCHANGE FREE FROM LOCKS USED IN ALL OTHER SEPARATE DWELLINGS, PROPRIETORSHIPS OR SIMILAR DISTINCT OCCUPANCIES. (ADDED BY ORD. NO. 1945CCS § 12 (PART), ADOPTED 6/8/99)

13. THE FOLLOWING REQUIREMENTS MUST BE MET FOR WINDOWS AND SLIDING GLASS DOORS:
(1) EXCEPT AS OTHERWISE SPECIFIED IN MUNICIPAL CODE SECTIONS 8.48.1(SPECIAL RESIDENTIAL BUILDING PROVISIONS) AND 8.48.130 (SPECIAL COMMERCIAL BUILDING PROVISIONS), ALL OPENABLE EXTERIOR WINDOWS AND SLIDING GLASS DOORS SHALL COMPLY WITH THE TESTS AS SET FORTHIN SECTION 8.48.140 (TESTS).
(2) WINDOW ASSEMBLIES WHICH ARE DESIGNED TO BE OPENABLE AND WHICH ARE REGULATED BY THIS CHAPTER SHALL COMPLY WITH UNIFORM BUILDING CODE STANDARD 10-6, UNLESS SUCH WINDOWS ARE PROTECTED BY APPROVED METAL BARS, SCREENS OR GRILLES.
(3) SLIDING DOOR ASSEMBLIES REGULATED BY THIS CHAPTER SHALL COMPLY WITH UNIFORM BUILDING CODE STANDARD 10-5, PART II.
(4) LOUVERED WINDOWS SHALL NOT BE USED WHEN ANY PORTION OF THE WINDOW IS LESS THAN TWELVE FEET VERTICALLY OR SIX FEET HORIZONTALLY FROM AN ACCESSIBLE SURFACE OR ANY ADJOINING ROOF, BALCONY, LANDING, STAIR TREAD, PLATFORM, OR SIMILAR STRUCTURE UNLESS SUCH WINDOWS ARE PROTECTED BY APPROVED METALBARS, SCREENS, OR GRILLS. (ADDED BY ORD. NO. 1945CCS § 12 (PART), ADOPTED 6/8/99)

14. GARAGE TYPE DOORS - ROLLING OVERHEAD, SOLID OVERHEAD, SWING, ADDED BY SLIDING OR ACCORDION SHALL CONFORM TO THE FOLLOWING STANDARDS:

(1) ALUMINUM DOORS SHALL BE A MINIMUM THICKNESS OF .0215 INCHES AND RIVETED TOGETHER A MINIMUM OF EIGHTEEN INCHES ON CENTER ALONG THE OUTSIDE SEAMS. THERE SHALL BE A FULL WIDTH HORIZONTAL BEAM ATTACHED TO THE MAIN DOOR STRUCTURE WHICH SHALL MEET THE PILOT, OR PEDESTRIAN ACCESS, DOOR FRAMING WITHIN THREE INCHES OF THE STRIKE AREA OF THE PILOT OR PEDESTRIAN ACCESS DOOR.
(2) DOORS UTILIZING A CYLINDER LOCK SHALL HAVE A MINIMUM FIVE PIN TUMBLER OPERATION WITH THE LOCKING BAR OR BOLT EXTENDING INTO THE RECEIVING GUIDE A MINIMUM OF ONE INCH.
(3) DOORS THAT EXCEED SIXTEEN FEET IN WIDTH SHALL HAVE TWO LOCK RECEIVING POINTS; OR, IF THE DOOR DOES NOT EXCEED NINETEEN FEET, A SINGLE BOLT MAY BE USED IF PLACED IN THE CENTER OF THE DOOR WITH THE LOCKING POINT LOCATED EITHER AT THE FLOOR OR DOOR FRAME HEADER; OR, TORSION SPRING COUNTER BALANCE TYPE HARDWARE MAY BE USED.
(4) EXCEPT IN A RESIDENTIAL BUILDING, DOORS SECURED BY ELECTRICAL OPERATION SHALL HAVE A KEYED-SWITCH TO OPEN THE DOOR WHEN IN A CLOSED POSITION, OR BY A SIGNAL LOCKING DEVICE.
(5) DOORS WITH SLIDE BOLT ASSEMBLIES SHALL HAVE FRAMES A MINIMUM OF .120 INCHES IN THICKNESS, WITH A MINIMUM BOLT DIAMETER OF ONE-HALF INCH AND PROTRUDE AT LEAST ONE AND ONE-HALF INCHES INTO THE RECEIVING GUIDE. A BOLT DIAMETER OF THREE-EIGHTHS OF AN INCH MAY BE USED IN A RESIDENTIAL BUILDING. THE SLIDE BOLT SHALL BE ATTACHED TO THE DOOR WITH NONREMOVABLE BOLTS FROM THE OUTSIDE. RIVETS SHALL NOT BE USED TO ATTACH SLIDE BOLT ASSEMBLIES.
(6) EXCEPT IN A RESIDENTIAL BUILDING, PADLOCK(S) USED WITH EXTERIOR MOUNTED SLIDE BOLT(S) SHALL HAVE A HARDENED STEEL SHACKLE LOCKING BOTH AT HEEL AND TOE AND A MINIMUM FIVE-PIN TUMBLER OPERATION WITH NONREMOVABLE KEY WHEN IN AN UNLOCKED POSITION. PADLOCK(S) USED WITH INTERIOR MOUNTED SLIDE BOLT SHALL HAVE A HARDENED STEEL SHACKLE WITH A MINIMUM FOUR PIN TUMBLER OPERATION.(ADDED BY ORD. NO. 1945CCS § 12 (PART), ADOPTED 6/8/99)

15. SWINGING EXTERIOR GLASS DOORS, WOOD OR METAL DOORS WITH GLASS PANELS, SOLID WOOD OR METAL DOORS SHALL BE CONSTRUCTED OR PROTECTED AS FOLLOWS:

(1) WOOD DOORS SHALL BE OF SOLID CORE CONSTRUCTION WITH A MINIMUM THICKNESS OF ONE AND THREE-FOURTHS (1-3/4) INCHES. WOOD PANEL DOORS WITH PANELS LESS THAN ONE (1) INCH THICK SHALL BE COVERED ON THE INSIDE WITH A MINIMUM SIXTEEN (16) U.S. GAUGE SHEET STEEL, OR ITS EQUIVALENT, WHICH IS TO BE ATTACHED WITH SCREWS ON MINIMUM SIX (6) INCH CENTERS. HOLLOW STEEL DOORS SHALL BE OF A MINIMUM SIXTEEN (16) U.S. GAUGE AND HAVE SUFFICIENT REINFORCEMENT TO MAINTAIN THE DESIGNED THICKNESS OF THE DOOR WHEN ANY LOCKING DEVICE IS INSTALLED; SUCH REINFORCEMENT BEING ABLE TO RESTRICT COLLAPSING OF THE DOOR AROUND ANY LOCKING DEVICE.
(2) ANY GLAZING UTILIZED WITHIN 40 INCHES OF ANY DOOR LOCKING MECHANISM SHALL BE CONSTRUCTED OR PROTECTED AS FOLLOWS:
(A) FULLY TEMPERED GLASS OR RATED BURGLARY RESISTANT GLAZING; OR
(B) IRON OR STEEL GRILLS OF AT LEAST ONE-EIGHTH (1/8) INCH MATERIAL WITH A MINIMUM TWO (2) INCH MESH SECURED ON THE INSIDE OF THE GLAZING MAY BE UTILIZED; OR
(C) THE GLAZING SHALL BE COVERED WITH IRON BARS OF AT LEAST ONE-HALF (2) INCH ROUND OR ONE INCH BY ONE-FOURTH INCH (1" X 1/4") FLAT STEEL MATERIAL, SPACED NOT MORE THAN FIVE (5) INCHES APART, SECURED ON THE INSIDE OF THE GLAZING.
(D) ITEMS (B) AND (C) ABOVE SHALL NOT INTERFERE WITH THE OPERATION OF OPENING WINDOWS IF SUCH WINDOWS ARE REQUIRED TO BE OPENABLE BY THE CALIFORNIA BUILDING CODE.

16. ALL SWINGING EXTERIOR WOOD AND STEEL DOORS SHALL BE EQUIPPED AS FOLLOWS:
(1) A SINGLE OR DOUBLE DOOR SHALL BE EQUIPPED WITH A SINGLE CYLINDER DEADBOLT LOCK. THE DEADBOLT LOCK MUST BE ACTUATED BY A KEY FROM THE EXTERIOR AND A KNOB OR THUMB TURN FROM THE INTERIOR AND WHEN PROJECTED BECOMES LOCKED AGAINST RETURN BY END PRESSURE. THE BOLT SHALL HAVE A MINIMUM PROJECTION OF ONE (1) INCH AND BE CONSTRUCTED SO AS TO REPEL CUTTING TOOL ATTACK. THE DEADBOLT SHALL HAVE AN EMBEDMENT OF AT LEAST THREE-FOURTHS (3/4) INCH INTO THE STRIKE RECEIVING THE PROJECTED BOLT. THE CYLINDER SHALL HAVE A CYLINDER GUARD, A MINIMUM OF FIVE PIN TUMBLERS, AND SHALL BE CONNECTED TO THE INNER PORTION OF THE LOCK BY CONNECTING SCREWS OF AT LEAST ONE-FOURTH INCH IN DIAMETER. THE PROVISIONS OF THE PRECEDING PARAGRAPH DO NOT APPLY WHERE (1) PANIC HARDWARE IS REQUIRED, OR (2) AN EQUIVALENT DEVICE IS APPROVED BY THE ENFORCING AUTHORITY.
(2) DOUBLE DOORS SHALL BE EQUIPPED AS FOLLOWS:
(A) THE INACTIVE LEAF OF DOUBLE DOOR(S) SHALL BE EQUIPPED WITH METAL FLUSH BOLTS HAVING A MINIMUM EMBEDMENT OF FIVE-EIGHTHS INCH INTO THE HEAD AND THRESHOLD OF THE DOOR FRAME.
(B) DOUBLE DOORS SHALL HAVE AN ASTRAGAL CONSTRUCTED OF STEEL A MINIMUM OF .125 INCH THICK WHICH WILL COVER THE OPENING BETWEEN THE DOORS. THE ASTRAGAL SHALL BE A MINIMUM OF TWO INCHES WIDE, AND EXTEND A MINIMUM OF ONE INCH BEYOND THE EDGE OF THE DOOR TO WHICH IT IS ATTACHED. THE ASTRAGAL SHALL BE ATTACHED TO THE OUTSIDE OF THE ACTIVE DOOR BY MEANS OF WELDING OR WITH NON-REMOVABLE BOLTS SPACED APART ON NOT MORE THAN TEN-INCH CENTERS.

17. ALUMINUM FRAME SWINGING DOORS SHALL BE EQUIPPED AS FOLLOWS:
(1) THE JAMB ON ALL ALUMINUM FRAME SWINGING DOORS SHALL BE SO CONSTRUCTED OR PROTECTED TO WITHSTAND SIXTEEN HUNDRED POUNDS OF PRESSURE IN BOTH A VERTICAL DISTANCE OF THREE INCHES AND A HORIZONTAL DISTANCE OF ONE INCH EACH SIDE OF THE STRIKE, SO AS TO PREVENT VIOLATION OF THE STRIKE.
(2) A SINGLE OR DOUBLE DOOR SHALL BE EQUIPPED WITH A DOUBLE CYLINDER DEADBOLT WITH A BOLT PROJECTION EXCEEDING ONE INCH, OR A HOOK SHAPED OR EXPANDING DOG BOLT THAT ENGAGES THE STRIKE SUFFICIENTLY TO PREVENT SPREADING. THE DEADBOLT LOCK SHALL HAVE A MINIMUM OF FIVE PIN TUMBLERS AND A CYLINDER GUARD.

18. PANIC HARDWARE, WHENEVER REQUIRED BY THE CALIFORNIA BUILDING CODE OR TITLE 19 OF THE CALIFORNIA ADMINISTRATIVE CODE, SHALL BE INSTALLED AS FOLLOWS:
(1) PANIC HARDWARE SHALL CONTAIN A MINIMUM OF TWO LOCKING POINTS ON EACH DOOR; OR
(2) ON SINGLE DOORS, PANIC HARDWARE MAY HAVE ONE LOCKING POINT WHICH IS NOT TO BE LOCATED AT EITHER THE TOP OR BOTTOM RAILS OF THE DOOR FRAME. THE DOOR SHALL HAVE AN ASTRAGAL CONSTRUCTED OF STEEL 0.125 INCH THICK WHICH SHALL BE ATTACHED WITH NON-REMOVABLE BOLTS TO THE OUTSIDE OF THE DOOR. THE ASTRAGAL SHALL EXTEND A MINIMUM OF SIX INCHES VERTICALLY ABOVE AND BELOW THE LATCH OF THE PANIC HARDWARE. THE ASTRAGAL SHALL BE A MINIMUM OF TWO INCHES WIDE AND EXTEND A MINIMUM OF ONE INCH BEYOND THE EDGE OF THE DOOR TO WHICH IT IS ATTACHED.
(3) DOUBLE DOORS CONTAINING PANIC HARDWARE SHALL HAVE AN ASTRAGAL ATTACHED TO THE DOORS AT THEIR MEETING POINT WHICH WILL CLOSE THE OPENING BETWEEN THEM, BUT NOT INTERFERE WITH THE OPERATION OF EITHER DOOR.

19. HORIZONTAL SLIDING DOORS SHALL BE EQUIPPED WITH A METAL GUIDE TRACK AT TOP AND BOTTOM AND A CYLINDER LOCK AND/OR PADLOCK WITH A HARDENED STEEL SHACKLE WHICH LOCKS AT BOTH HEEL AND TOE, AND A MINIMUM FIVE PIN TUMBLER OPERATION WITH NON-REMOVABLE KEY WHEN IN AN UNLOCKED POSITION. THE BOTTOM TRACK SHALL BE SO DESIGNED THAT THE DOOR CANNOT BE LIFTED FROM THE TRACK WHEN THE DOOR IS IN A LOCKED POSITION.

20. IN OFFICE BUILDINGS (MULTIPLE OCCUPANCY), ALL ENTRANCE DOORS TO INDIVIDUAL OFFICE SUITES SHALL MEET THE CONSTRUCTION AND LOCKING REQUIREMENTS FOR EXTERIOR DOORS.

21. WINDOWS SHALL BE DEEMED ACCESSIBLE IF LESS THAN TWELVE FEET ABOVE GROUND. ACCESSIBLE WINDOWS HAVING A PANE EXCEEDING NINETY-SIX SQUARE INCHES IN AN AREA WITH THE SMALLEST DIMENSION EXCEEDING SIX INCHES AND NOT VISIBLE FROM A PUBLIC OR PRIVATE THOROUGHFARE SHALL BE PROTECTED IN THE FOLLOWING MANNER:

(1) FULLY TEMPERED GLASS OR BURGLARY-RESISTANT GLAZING; OR
(2) THE FOLLOWING WINDOWS BARRIERS MAY BE USED BUT SHALL BE SECURED WITH NON-REMOVABLE BOLTS:
(A) INSIDE OR OUTSIDE IRON BARS OF AT LEAST ONE-HALF-INCH ROUNDOR ONE BY ONE-QUARTER INCH FLAT STEEL MATERIAL, SPACED NOT MORE THAN FIVE INCHES APART AND SECURELY FASTENED; OR
(B) INSIDE OR OUTSIDE IRON OR STEEL GRILLS OF AT LEAST ONE-EIGHTH-INCH MATERIAL WITH NOT MORE THAN A TWO-INCH MESH AND SECURELY FASTENED.
(3) IF A SIDE OR REAR WINDOW IS OF THE TYPE THAT CAN BE OPENED, IT SHALL, WHERE APPLICABLE, BE SECURED ON THE INSIDE WITH EITHER A SLIDE BAR, BOLT, CROSSBAR, AUXILIARY LOCKING DEVICE, AND/OR PADLOCK WITH HARDENED STEEL SHACKLE, A MINIMUM FOUR PIN TUMBLER OPERATION.
(4) THE PROTECTIVE BARS OR GRILLS SHALL NOT INTERFERE WITH THE OPERATION OF OPENING WINDOWS IF SUCH WINDOWS ARE REQUIRED TOBE OPENABLE BY THE CALIFORNIA BUILDING CODE.

PICO BRANCH LIBRARY

2201 Pico Blvd.
Santa Monica, CA 90404

PROJECT

KoningEizenbergArchitecture
1454 25th St, Santa Monica, CA 90404

310.828.6131 info@kearch.com
310.828.0719 fax www.kearch.com

ARCHITECT'S PROJECT NO.
1001

ARCHITECT

All designs, ideas, arrangements and plans indicated by these drawings are the property and copyright of the Architect and shall neither be used on any other work nor be disclosed to any other person for any use whatsoever without written permission.

Koning Eizenberg Architecture and/or its principals and employees waives any and all liability or responsibility for problems that may occur when these plans, drawings, specifications, and/or designs are followed without the professional's guidance with ambiguities, or conflicts which are alleged.

CONSULTANT

City of
Santa Monica
Architecture Services

1437 4TH STREET, SUITE 300
SANTA MONICA, CA 90401
TEL. (310) 458-2205
FAX. (310) 399-1541
architecture@smgov.net

DATE : ______ 20 __
SUBMITTED BY :

DATE : ______ 20 __
APPROVED BY :
Miriam Mulder,
Architecture Services Manager

CITY OF SANTA MONICA
DEPARTMENT OF PUBLIC WORKS

REVIEWED BY : DATE : ______ 20 __

REVIEWED BY : DATE : ______ 20 __

REVIEWED BY : DATE : ______ 20 __

CITY CLIENT

NO.	DATE	BY	DESCRIPTION

REVISIONS

ISSUE
65% CONSTRUCTION DOCUMENTS / BID SET

DATE
01/23/2012

DRAWING NO. **6693**

SHEET OF SHEETS

SHEET TITLE
GENERAL NOTES

SHEET NO.
A0.40

SHEET OF

DWG. NO. : -

TITLE OF PROJECT :

COMMERCIAL ACCESSIBILITY PLAN REVIEW CHECKLIST
SITE, PEDESTRIAN WALKS, ENTRANCES & EXITS, SIGNS C

A. SITE DEVELOPMENT & ACCESSIBLE ROUTE OF TRAVEL

1. ACCESSIBLE ROUTE OF TRAVEL IS DEFINED AS "A CONTINUOUS UNOBSTRUCTED PATH CONNECTING ALL ACCESSIBLE ELEMENTS AND SPACES IN AN ACCESSIBLE BUILDING OR FACILITY THAT CAN BE NEGOTIATED BY A PERSON WITH A DISABILITY USING A WHEELCHAIR AND THAT IS ALSO SAFE FOR AND USABLE BY PERSONS WITH OTHER DISABILITIES, AND THAT IS CONSISTENT WITH THE DEFINITION OF "PATH OF TRAVEL". (1102B)

2. SITE DEVELOPMENT AND GRADING SHALL BE DESIGNED TO PROVIDE ACCESS TO ALL ENTRANCES AND EXTERIOR GROUND FLOOR EXITS, AND ACCESS TO NORMAL PATHS OF TRAVEL, AND WHERE NECESSARY TO PROVIDE ACCESS, SHALL INCORPORATE PEDESTRIAN RAMPS, CURB RAMPS, ETC. (1127B.1)

3. AT LEAST ONE ACCESSIBLE ROUTE WITHIN THE BOUNDARY OF THE SITE SHALL BE PROVIDED FROM PUBLIC TRANSPORTATION STOPS, ACCESSIBLE PARKING AND ACCESSIBLE PASSENGER LOADING ZONES AND PUBLIC STREETS OR SIDEWALKS TO THE ACCESSIBLE BUILDING ENTRANCE THEY SERVE. THE ACCESSIBLE ROUTE SHALL, TO THE MAXIMUM EXTENT FEASIBLE, COINCIDE WITH THE ROUTE FOR THE GENERAL PUBLIC. (1114B.1.2)

4. THE ACCESSIBLE ROUTE OF TRAVEL SHALL BE THE MOST PRACTICAL DIRECT ROUTE BETWEEN ACCESSIBLE BUILDING ENTRANCES, ACCESSIBLE SITE FACILITIES, AND THE ACCESSIBLE ENTRANCE TO THE SITE. IF ACCESS IS PROVIDED FOR PEDESTRIANS FROM A PEDESTRIAN TUNNEL OR ELEVATED WALKWAY, ENTRANCES TO THE BUILDING FROM EACH TUNNEL OR WALKWAY MUST BE ACCESSIBLE. (1127B.1)

5. WHEN MORE THAN ONE BUILDING OR FACILITY IS LOCATED ON A SITE, ACCESSIBLE ROUTES OF TRAVEL COMPLYING WITH SECTION 1114B.1.2 SHALL BE PROVIDED BETWEEN BUILDINGS AND ACCESSIBLE SITE FACILITIES, ACCESSIBLE ELEMENTS, AND ACCESSIBLE SPACES THAT ARE ON THE SAME SITE. (1127B.1)

6. WHEN A BUILDING OR PORTION OF A BUILDING IS REQUIRED TO BE ACCESSIBLE OR ADAPTABLE, AN ACCESSIBLE ROUTE OF TRAVEL COMPLYING WITH SECTIONS 1102B, 1114B, 1124B, 1133B.3, 1133B.5, 1133B.7 AND 1133B.8.6 SHALL BE PROVIDED TO ALL PORTIONS OF THE BUILDING, TO ACCESSIBLE BUILDING ENTRANCES, AND BETWEEN THE BUILDING AND THE PUBLIC WAY. (1114B.1.2)

7. EXCEPT WITHIN AN INDIVIDUAL DWELLING UNIT, AN ACCESSIBLE ROUTE OF TRAVEL SHALL NOT PASS THROUGH KITCHENS, STORAGE ROOMS, RESTROOMS, CLOSETS OR OTHER SPACES USED FOR SIMILAR PURPOSES. (1114B.1.2)

8. AT LEAST ONE ACCESSIBLE ROUTE SHALL CONNECT THE FOLLOWING: (1114B.1.2)

A) ACCESSIBLE BUILDINGS, FACILITIES, ELEMENTS AND SPACES THAT ARE ON THE SAME SITE.

B) ACCESSIBLE BUILDING OR FACILITY ENTRANCES WITH ALL ACCESSIBLE SPACES AND ELEMENTS AND WITH ALL ACCESSIBLE DWELLING UNITS WITHIN THE BUILDING OR FACILITY.

C) THE ACCESSIBLE ROUTE SHALL, TO THE MAXIMUM EXTENT FEASIBLE COINCIDE WITH THE ROUTE FOR THE GENERAL PUBLIC.

D) ACCESSIBLE ENTRANCE OF EACH ACCESSIBLE DWELLING UNIT WITH THOSE EXTERIOR AND INTERIOR SPACES AND FACILITIES THAT SERVE THE ACCESSIBLE DWELLING UNIT.

9. WHERE MORE THAN ONE ROUTE OF TRAVEL IS PROVIDED, ALL ROUTES SHALL BE ACCESSIBLE. (1114B.1.2)

B. ACCESSIBLE PARKING

1. EACH LOT OR PARKING STRUCTURE WHERE PARKING IS PROVIDED FOR THE PUBLIC AS CLIENTS, GUESTS OR EMPLOYEES, SHALL PROVIDE ACCESSIBLE PARKING AS REQUIRED BY SECTION 1129B. (1129B.1)

2. PROVIDE DISABLED PARKING SPACES AS REQUIRED BY TABLE 11B-6 FOR PARKING LOT/STRUCTURE. (1129B.1)

TOTAL # OF PARKING SPACES PROVIDED	MINIMUM # OF ACCESSIBLE SPACES REQUIRED
1-25	1
26-50	2
51-75	3
76-100	4
101-150	5
151-200	6
201-300	7
301-400	8
401- 500	9
501-1000	2% OF TOTAL
1001 & OVER	20 PLUS ONE FOR EACH 100 OR FRACTION THEREOF OVER 1,001

3. AT FACILITIES PROVIDING MEDICAL CARE AND OTHER SERVICES FOR PERSONS WITH MOBILITY IMPAIRMENTS, PARKING SPACES COMPLYING WITH SECTION 1129B SHALL BE PROVIDED IN ACCORDANCE WITH TABLE 11B-6, EXCEPT AS FOLLOWS: (1129B.2)

A) OUTPATIENT UNITS AND FACILITIES: 10% OF THE TOTAL NUMBER OF PARKING SPACES PROVIDED SERVING EACH SUCH OUTPATIENT UNIT OR FACILITY. (1129B.2.1)

B) UNITS AND FACILITIES THAT SPECIALIZE IN TREATMENT OR SERVICES FOR PERSONS WITH MOBILITY IMPAIRMENTS: 20% OF THE TOTAL NUMBER OF PARKING SPACES PROVIDED SERVING EACH SUCH UNIT OR FACILITY. (1129B.2.2)

4. ACCESSIBLE PARKING SPACES SERVING A PARTICULAR BUILDING SHALL BE LOCATED ON THE SHORTEST ACCESSIBLE ROUTE OF TRAVEL FROM ADJACENT PARKING TO AN ACCESSIBLE ENTRANCE (AS NEAR AS PRACTICAL TO AN ACCESSIBLE ENTRANCE). (1129B.1)

5. IN PARKING FACILITIES THAT DO NOT SERVE A PARTICULAR BUILDING, ACCESSIBLE PARKING SHALL BE LOCATED ON THE SHORTEST ACCESSIBLE ROUTE OF TRAVEL TO AN ACCESSIBLE PEDESTRIAN ENTRANCE OF THE PARKING FACILITY. (1129B.1)

6. IN BUILDINGS WITH MULTIPLE ACCESSIBLE ENTRANCES WITH ADJACENT PARKING, ACCESSIBLE PARKING SPACES SHALL BE DISPERSED AND LOCATED CLOSEST TO THE ACCESSIBLE ENTRANCES. (1129B.1)

7. WHERE SINGLE ACCESSIBLE PARKING SPACES ARE PROVIDED, THEY SHALL BE 14 FEET WIDE AND LINED TO PROVIDE A 9-FOOT PARKING AREA AND A 5-FOOT LOADING AND UNLOADING ACCESS AISLE ON THE PASSENGER SIDE OF THE VEHICLE. THE WORDS "NO PARKING" SHALL BE PAINTED ON THE GROUND WITHIN EACH 5- FOOT LOADING AND UNLOADING ACCESS AISLE. THIS NOTICE SHALL BE PAINTED IN WHITE LETTERS NOT LESS THAN 12 INCHES HIGH AND LOCATED SO THAT IT IS VISIBLE TO TRAFFIC ENFORCEMENT OFFICIALS. (1129B.3.1, FIG 11B-18B)

8. WHEN MORE THAN ONE ACCESSIBLE PARKING SPACE IS PROVIDED IN LIEU OF PROVIDING A 14-FOOT-WIDE SPACE FOR EACH PARKING SPACE, TWO SPACES CAN BE PROVIDED WITHIN A 23-FOOT-WIDE AREA LINED TO PROVIDE A 9-FOOT PARKING AREA ON EACH SIDE OF A 5-FOOT LOADING AND UNLOADING ACCESS AISLE IN THE CENTER. THE WORDS "NO PARKING" SHALL BE PAINTED ON THE GROUND WITHIN EACH 5-FOOT LOADING AND UNLOADING ACCESS AISLE. THIS NOTICE SHALL BE PAINTED IN WHITE LETTERS NOT LESS THAN 12 INCHES HIGH AND LOCATED SO THAT IT IS VISIBLE TO TRAFFIC ENFORCEMENT OFFICIALS. (1129B.3.1, FIG 11B-18A & 18C)

9. ONE IN EVERY EIGHT ACCESSIBLE SPACES, BUT NOT LESS THAN ONE, SHALL BE SERVED BY AN ACCESS AISLE 96 INCHES WIDE MINIMUM PLACED ON THE SIDE OPPOSITE THE DRIVER'S SIDE WHEN THE VEHICLE IS GOING FORWARD INTO THE PARKING SPACE AND SHALL BE DESIGNATED "VAN ACCESSIBLE". ALL SUCH SPACES MAY BE GROUPED ON ONE LEVEL OF A PARKING STRUCTURE. (1129B.3.2, FIG. 11B-18A, 18B, & 18C)

10. THE MINIMUM LENGTH OF AN ACCESSIBLE PARKING SPACE SHALL BE 18'. (1129B.3.1, FIG 11B-18A, 18B, & 18C)

11. ACCESSIBLE PARKING SPACES SHALL BE SO LOCATED THAT PERSONS WITH DISABILITIES ARE NOT COMPELLED TO WHEEL OR WALK BEHIND PARKED CARS OTHER THAN THEIR OWN. RAMP SHALL NOT ENCROACH INTO ANY ACCESSIBLE PARKING SPACE OR THE ADJACENT ACCESS AISLE. THE MAXIMUM CROSS SLOPE IN ANY DIRECTION OF AN ACCESSIBLE PARKING SPACE AND ADJACENT ACCESS AISLE SHALL NOT EXCEED 2 PERCENT. (1129B.3.3)

12. SURFACE SLOPES OF ACCESSIBLE PARKING SPACES SHALL BE THE MINIMUM POSSIBLE AND SHALL NOT EXCEED ONE UNIT VERTICAL TO 50-UNITS HORIZONTAL (2-PERCENT SLOPE) IN ANY DIRECTION. (1129B.3.4)

13. IN EACH PARKING AREA, A BUMPER OR CURB SHALL BE PROVIDED AND LOCATED TO PREVENT ENCROACHMENT OF CARS OVER THE REQUIRED WIDTH OF WALKWAYS. (1129B.3.3, FIG 11B-18A, 18B, & 18C)

14. PEDESTRIAN WAYS WHICH ARE ACCESSIBLE TO PEOPLE WITH DISABILITIES SHALL BE PROVIDED FROM EACH SUCH PARKING SPACE TO RELATED FACILITIES, INCLUDING CURB CUTS OR RAMPS AS NEEDED. (1129B.3.3, FIG 11B-18A, 18B, & 18C)

15. EACH PARKING SPACE RESERVED FOR PERSONS WITH DISABILITIES SHALL BE IDENTIFIED BY A REFLECTORIZED SIGN PERMANENTLY POSTED IMMEDIATELY ADJACENT TO AND VISIBLE FROM EACH STALL OR SPACE, CONSISTING OF THE INTERNATIONAL SYMBOL OF ACCESSIBILITY IN WHITE ON A DARK BLUE BACKGROUND. THE SIGN SHALL NOT BE SMALLER THAN 70 SQUARE INCHES IN AREA AND, WHEN IN A PATH OF TRAVEL, SHALL BE POSTED AT A MINIMUM HEIGHT OF 80 INCHES FROM THE BOTTOM OF THE SIGN TO THE PARKING SPACE FINISHED GRADE. (1129B.4, FIG 11B-18A, 18B, & 18C)

16. SIGNS TO IDENTIFY ACCESSIBLE PARKING SPACES MAY BE CENTERED ON A WALL AT THE INTERIOR END OF THE PARKING SPACE. (1129B.4)

17. VAN ACCESSIBLE PARKING SPACES SHALL HAVE AN ADDITIONAL SIGN STATING "VAN ACCESSIBLE" MOUNTED BELOW THE SYMBOL OF ACCESSIBILITY. (1129B.4)

18. AN ADDITIONAL SIGN SHALL ALSO BE POSTED IN A CONSPICUOUS PLACE AT EACH ENTRANCE TO OFF-STREET PARKING FACILITIES, OR IMMEDIATELY ADJACENT TO AND VISIBLE FROM EACH STALL OR SPACE. THE SIGN SHALL BE NOT LESS THAN 17 INCHES BY 22 INCHES IN SIZE WITH LETTERING NOT LESS THAN 1 INCH IN HEIGHT, WHICH CLEARLY AND CONSPICUOUSLY STATES THE FOLLOWING: (1129B.4)

19. "UNAUTHORIZED VEHICLES PARKED IN DESIGNATED ACCESSIBLE SPACES NOT DISPLAYING DISTINGUISHING PLACARDS OR LICENSE PLATES ISSUED FOR PERSONS WITH DISABILITIES MAY BE TOWED AWAY AT OWNER'S EXPENSE. TOWED VEHICLES MAY BE RECLAIMED AT OR BY TELEPHONING ." (BLANK SPACES ARE TO BE FILLED IN WITH APPROPRIATE INFORMATION AS A PERMANENT PART OF THE SIGN.)

B. ACCESSIBLE PARKING CONT'D

20. THE SURFACE OF EACH ACCESSIBLE PARKING SPACE OR STALL SHALL HAVE A SURFACE IDENTIFICATION DUPLICATING EITHER OF THE FOLLOWING SCHEMES: (1129B.4, FIG 11B-18A, 18B, & 18C)

A) BY OUTLINING OR PAINTING THE STALL OR SPACE IN BLUE AND OUTLINING ON THE GROUND IN THE STALL OR SPACE IN WHITE OR SUITABLE CONTRASTING COLOR A PROFILE VIEW DEPICTING A WHEELCHAIR WITH OCCUPANT; OR

B) BY OUTLINING A PROFILE VIEW OF A WHEELCHAIR WITH OCCUPANT IN WHITE ON BLUE BACKGROUND. THE PROFILE VIEW SHALL BE LOCATED SO THAT IT IS VISIBLE TO A TRAFFIC ENFORCEMENT OFFICER WHEN A VEHICLE IS PROPERLY PARKED IN THE SPACE AND SHALL BE 36 INCHES HIGH BY 36 INCHES WIDE.

21. ALL ENTRANCES TO AND VERTICAL CLEARANCES WITHIN PARKING STRUCTURES SHALL HAVE A MINIMUM VERTICAL CLEARANCE OF 8-FEET 2-INCHES WHERE REQUIRED FOR ACCESSIBILITY TO ACCESSIBLE PARKING SPACES. (1130B)

C. PASSENGER DROP-OFF & LOADING ZONES

1. WHEN PROVIDED, PASSENGER DROP-OFF AND LOADING ZONES SHALL BE LOCATED ON AN ACCESSIBLE ROUTE OF TRAVEL. (1131B.1)

2. WHERE PROVIDED, ONE PASSENGER DROP-OFF AND LOADING ZONE SHALL PROVIDE AN ACCESS AISLE AT LEAST 60 INCHES WIDE AND 20 FEET LONG ADJACENT AND PARALLEL TO THE VEHICLE PULL-UP SPACE. VEHICLE STANDING SPACES AND ACCESS AISLES SHALL BE LEVEL WITH SURFACE SLOPES NOT EXCEEDING 1:50 (2 PERCENT) IN ALL DIRECTIONS. IF THERE ARE CURBS BETWEEN THE ACCESS AISLE AND THE VEHICLE PULL-UP SPACE, THEN A CURB RAMP SHALL BE PROVIDED. (1131B.2.1, FIG 11B-24)

3. PROVIDE MINIMUM VERTICAL CLEARANCE OF 114 INCHES AT ACCESSIBLE PASSENGER LOADING ZONES AND ALONG AT LEAST ONE VEHICLE ACCESS ROUTE TO SUCH AREAS FROM SITE ENTRANCES AND EXITS. (1131B.2.2)

4. VALET PARKING FACILITIES SHALL PROVIDE A PASSENGER LOADING ZONE COMPLYING WITH SECTION 1131B.2 AND SHALL BE LOCATED ON AN ACCESSIBLE ROUTE OF TRAVEL TO THE ENTRANCE OF THE FACILITY. THE PARKING SPACE REQUIREMENTS OF SECTION 1129B THROUGH 1130B APPLY TO FACILITIES WITH VALET PARKING. (1131B.3)

5. WHERE PROVIDED, BUS STOP PADS SHALL HAVE A FIRM, STABLE SURFACE WITH A MINIMUM CLEAR LENGTH OF 96 INCHES (MEASURED FROM THE CURB OR ROADWAY EDGE) AND A MINIMUM CLEAR WIDTH OF 60 INCHES (MEASURED PARALLEL TO THE VEHICLE ROADWAY) TO THE MAXIMUM EXTENT ALLOWED BY LEGAL OR SITE CONSTRAINTS. BUS STOP PADS SHALL CONNECT TO STREETS, SIDEWALKS OR PEDESTRIAN PATHS AS PART OF AN ACCESSIBLE ROUTE. NEWLY CONSTRUCTED BUS STOP PADS MUST PROVIDE A SQUARE CURB SURFACE BETWEEN THE PAD AND THE ROAD OR OTHER DETECTABLE WARNING APPROVED BY DEPARTMENT OF STATE ARCHITECT IN ACCORDANCE WITH SECTION 1133B.8.5. BUS STOP PADS SHALL BE AT THE SAME SLOPE AS THE ROADWAY IN THE DIRECTION PARALLEL TO THE ROADWAY AND A MAXIMUM 2% SLOPE PERPENDICULAR TO THE ROADWAY. (1121B.2.1)

6. WHERE PROVIDED, BUS STOP SHELTERS SHALL BE INSTALLED SO AS TO PERMIT A WHEELCHAIR USER TO ENTER THE SHELTER FROM THE PUBLIC WAY AND ACCESS A CLEAR FLOOR AREA OF 30 INCHES BY 48 INCHES, COMPLETELY WITHIN THE SHELTER. SUCH SHELTERS SHALL BE CONNECTED BY AN ACCESSIBLE ROUTE TO THE BOARDING AREA. (1121B.2.1)

D. WALKS & SIDEWALKS

1. WALKS AND SIDEWALKS SUBJECT TO THESE REGULATIONS SHALL HAVE A CONTINUOUS COMMON SURFACE, NOT INTERRUPTED BY STEPS OR BY ABRUPT CHANGES IN LEVEL EXCEEDING ½". (1133B.7.1)

2. WALKS AND SIDEWALKS SHALL BE 48" MINIMUM IN WIDTH. (1133B.7.1, FIG 11B-27(A))

3. WHEN CHANGES IN LEVEL NOT EXCEEDING 1/2" OCCUR, THEY SHALL BE BEVELED WITH A SLOPE NO GREATER THAN ONE UNIT VERTICAL TO 2 UNITS HORIZONTAL (50 PERCENT), EXCEPT THAT LEVEL CHANGES NOT EXCEEDING 1/4" MAY BE VERTICAL. (1133B.7.4, FIG 11B-5E(C) & (D))

4. WHEN ABRUPT CHANGES IN LEVEL GREATER THAN ½" ARE NECESSARY; THEY SHALL COMPLY WITH THE REQUIREMENTS FOR CURB RAMPS. (1133B.7.4)

5. WALK AND SIDEWALK SURFACES SHALL BE SLIP-RESISTANT AS FOLLOWS: (1133B.7.1)

A) SURFACES WITH A SLOPE OF LESS THAN 6% GRADIENT SHALL BE AT LEAST A SLIP - RESISTANT AS THAT DESCRIBED AS A MEDIUM SALTED FINISH. (1133B.7.1.1)

B) SURFACES WITH A SLOPE OF 6% OR GREATER GRADIENT SHALL BE SLIP-RESISTANT. (1133B.7.1.2)

6. WHEN THE SLOPE IN THE DIRECTION OF TRAVEL OF ANY WALK EXCEEDS ONE VERTICAL TO 20 UNITS HORIZONTAL (5 PERCENT GRADIENT), IT SHALL COMPLY WITH THE PROVISIONS OF SECTION 1133B.5. (1133B.7.3)

7. WALK AND SIDEWALK SURFACE CROSS SLOPES SHALL NOT EXCEED 1/4" PER FOOT. (1133B.7.1.3)

8. ALL WALKS WITH CONTINUOUS GRADIENTS SHALL HAVE LEVEL AREAS AT LEAST 5 FEET IN LENGTH AT INTERVALS OF AT LEAST EVERY 400 FEET. (1133B.7.6)

9. WALKS SHALL BE PROVIDED WITH A LEVEL AREA NOT LESS THAN 60 INCHES BY 60 INCHES AT A DOOR OR GATE THAT SWINGS TOWARD THE WALK, AND NOT LESS THAN 48 INCHES WIDE BY 44 INCHES DEEP AT A DOOR OR GATE THAT SWINGS AWAY FROM THE WALK. (1133B7.5, FIG 11B-26A & 26B)

10. LEVEL AREA OF WALKS SHALL EXTEND 24 INCHES TO THE SIDE OF THE STRIKE EDGE OF A DOOR OR GATE THAT SWINGS TOWARD THE WALK. (1133B.7.5, FIG 11B-26B)

11. WALKS, SIDEWALKS, AND PEDESTRIAN WAYS SHALL BE FREE OF GRATINGS WHENEVER POSSIBLE. FOR GRATINGS LOCATED IN THE SURFACE OF ANY OF THESE AREAS, GRID OPENINGS IN GRATINGS SHALL BE LIMITED TO ½" IN THE DIRECTION OF TRAFFIC FLOW. IF GRATINGS HAVE ELONGATED OPENINGS, THEY SHALL BE PLACED SO THAT THE LONG DIMENSION IS PERPENDICULAR TO THE DOMINANT DIRECTION OF TRAVEL. (1133B7.2, FIG 11B-7E(A))

E. CURB RAMPS

CURB RAMP IS DEFINED AS "A SLOPING PEDESTRIAN WAY, INTENDED FOR PEDESTRIAN TRAFFIC, WHICH PROVIDES ACCESS BETWEEN A WALK OR SIDEWALK TO A SURFACE LOCATED ABOVE OR BELOW AN ADJACENT CURB FACE". (1102B)

1. CURB RAMPS SHALL BE CONSTRUCTED AT EACH CORNER OF STREET INTERSECTIONS WHERE A PEDESTRIAN WAY CROSSES A CURB. THE PREFERRED AND RECOMMENDED LOCATION FOR CURB RAMPS IS IN THE CENTER OF THE CROSSWALK OR EACH STREET CORNER. WHERE IT IS NECESSARY TO LOCATE A CURB RAMP IN THE CENTER OF THE CURB RETURN AND THE STREET SURFACES ARE MARKED TO IDENTIFY PEDESTRIAN CROSSWALKS, THE LOWER END OF THE CURB RAMP SHALL TERMINATE WITHIN SUCH CROSSWALK AREAS. (SEC 1127B.5.1, FIG 11B-20C AND 11B-22.)

2. PROVIDE A CURB RAMP AT ________________(1127B.5.1)

3. CURB RAMPS SHALL BE A MINIMUM OF 4 FEET IN WIDTH AND SHALL LIE, GENERALLY, IN A SINGLE SLOPED PLANE, WITH A MINIMUM OF SURFACE WARPING AND CROSS SLOPE. (1127B.5.2)

4. THE SLOPE OF CURB RAMPS SHALL NOT EXCEED ONE UNIT VERTICAL TO 12 UNITS HORIZONTAL (8.33 PERCENT SLOPE). (1127B.5.3)

5. TRANSITIONS FROM RAMPS TO WALKS, GUTTERS, OR STREETS SHALL BE FLUSH AND FREE OF ABRUPT CHANGES. (1127B.5.3)

6. MAXIMUM SLOPES OF ADJOINING GUTTERS, ROAD SURFACE IMMEDIATELY ADJACENT TO THE CURB RAMP OR ACCESSIBLE ROUTE, SHALL NOT EXCEED ONE UNIT VERTICAL TO 20 UNITS HORIZONTAL (5 PERCENT SLOPE) WITHIN 4 FEET OF THE TOP AND BOTTOM OF THE CURB RAMP. THE SLOPE OF THE FANNED OR FLARED SIDES OF CURB RAMPS SHALL NOT EXCEED ONE UNIT VERTICAL TO 10 HORIZONTAL (10 PERCENT SLOPE). (1127B.5.3)

7. A LEVEL LANDING 4 FEET DEEP SHALL BE PROVIDED AT THE UPPER END OF EACH CURB RAMP OVER ITS FULL WIDTH TO PERMIT SAFE EGRESS FROM THE RAMP SURFACE, OR THE SLOPE OF THE FANNED OR FLARED SIDES OF THE CURB RAMP SHALL NOT EXCEED ONE UNIT VERTICAL TO 12 UNITS HORIZONTAL (8.33 PERCENT SLOPE). (1127B.5.4)

8. THE SURFACE OF EACH CURB RAMP AND ITS FLARED SIDES SHALL COMPLY WITH SECTION 1124B, GROUND AND FLOOR SURFACES, AND SHALL BE OF CONTRASTING FINISH FROM THAT OF THE ADJACENT SIDEWALK. (1127B.5.5)

9. ALL CURB RAMPS SHALL HAVE A GROOVED BORDER 12 INCHES WIDE AT THE LEVEL SURFACE OF THE SIDEWALK ALONG THE TOP AND EACH SIDE APPROXIMATELY 3/4" ON CENTER. ALL CURB RAMPS CONSTRUCTED BETWEEN THE FACE OF THE CURB AND THE STREET SHALL HAVE A GROOVED BORDER AT THE LEVEL SURFACE OF THE SIDEWALK. (1127B.5.6, FIG. 11B-19A & 19B)

10. CURB RAMPS SHALL HAVE A DETECTABLE WARNING THAT EXTENDS THE FULL WIDTH AND DEPTH OF THE CURB RAMP, EXCLUDING THE FLARED SIDES, INSIDE THE GROOVED BORDER. DETECTABLE WARNINGS SHALL CONSIST OF RAISED TRUNCATED DOMES WITH A DIAMETER OF NOMINAL 0.9 INCH AT THE BASE TAPERING TO 0.45 INCH AT THE TOP, A HEIGHT OF NOMINAL 0.2 INCH, AND A CENTER-TO-CENTER SPACING OF NOMINAL 2.35 INCHES, IN COMPLIANCE WITH FIGURE 11B-23A. "NOMINAL" HERE SHALL BE IN ACCORDANCE WITH SECTION 12-11A AND B-102, STATE REFERENCED STANDARDS CODE. THE DETECTABLE WARNING SHALL CONTRAST VISUALLY WITH ADJOINING SURFACES, EITHER LIGHT-ON-DARK OR DARK-ON-LIGHT. THE MATERIAL USED TO PROVIDE CONTRAST SHALL BE AN INTEGRAL PART OF THE WALKING SURFACE. THE DOMES MAY BE CONSTRUCTED IN A VARIETY OF METHODS, INCLUDING CAST-IN-PLACE OR STAMPED, OR MAY BE PART OF A PREFABRICATED SURFACE TREATMENT. ONLY APPROVED DSA-AC DETECTABLE WARNING PRODUCTS AND DIRECTIONAL SURFACES SHALL BE INSTALLED AS PROVIDED IN THE CALIFORNIA CODE OF REGULATIONS (CCR), TITLE 24, PART 1, ARTICLES 2, 3, AND 4. (1127B.5.7)

11. CURB RAMPS SHALL BE LOCATED OR PROTECTED TO PREVENT THEIR OBSTRUCTION BY PARKED VEHICLES. (1127B.5.8)

F. PEDESTRIAN GRADE SEPARATIONS (OVERPASSES AND UNDERPASSES)

1. PEDESTRIAN RAMPS ON PEDESTRIAN GRADE SEPARATIONS SHALL COMPLY WITH THE REQUIREMENTS OF SECTION 1133B.5 FOR RAMPS. (1128B)

2. CROSS SLOPES OF WALKING SURFACES SHALL BE THE MINIMUM POSSIBLE AND SHALL NOT EXCEED ¼ INCH PER FOOT. THE SLOPE OF ANY APPRECIABLY WARPED WALKING SURFACE SHALL NOT EXCEED 1 UNIT VERTICAL IN 12 UNITS HORIZONTAL IN ANY DIRECTION. (1128B)

3. WHERE PEDESTRIAN GRADE SEPARATIONS CROSS STREETS OR OTHER VEHICULAR TRAFFIC WAYS, AND WHERE A STREET LEVEL CROSSING CAN REASONABLY AND SAFELY BE USED BY PERSONS WITH DISABILITIES, THERE SHALL BE PROVIDED CONFORMING.

G. RAMPS (EXTERIOR OR INTERIOR)

1. ANY PATH OF TRAVEL SHALL BE CONSIDERED A RAMP IF ITS SLOPE IS GREATER THAN 1' RISE IN 20' OF HORIZONTAL RUN. (1133B.5.1)

2. THE MAXIMUM SLOPE OF A RAMP THAT SERVES ANY EXIT WAY, PROVIDES ACCESS FOR PERSONS WITH PHYSICAL DISABILITIES, OR IS IN THE ACCESSIBLE ROUTE OF TRAVEL SHALL BE 1 FOOT RISE IN 12 FEET OF HORIZONTAL RUN (8.3 PERCENT GRADIENT). THE LEAST POSSIBLE SLOPE SHALL BE USED FOR ANY RAMP. (1133B.5.3)

3. THE CROSS SLOPE OF RAMP SURFACES SHALL BE NO GREATER THAN 1:50. (1133B.5.3.1)

4. PEDESTRIAN RAMPS SHALL HAVE A MINIMUM CLEAR WIDTH OF 48 INCHES, UNLESS REQUIRED TO BE WIDER BY SOME OTHER PROVISION OF THIS CODE. (1133B.5.2)

5. WHERE A PEDESTRIAN RAMP IS THE ONLY EXIT DISCHARGE PATH SERVING ENTRANCES TO BUILDINGS OR WHEN IT SERVES AN OCCUPANT LOAD OF 300 OR MORE, THE RAMP SHALL HAVE A MINIMUM CLEAR WIDTH OF 60 INCHES. (1133B.5.2)

6. LEVEL LANDINGS SHALL BE PROVIDED AT THE TOP AND BOTTOM OF EACH RAMP. (1133B.5.4.1, FIG 11B-38 & 39)

7. INTERMEDIATE LANDINGS SHALL BE PROVIDED AT INTERVALS NOT EXCEEDING 30 INCHES OF VERTICAL RISE AND AT EACH CHANGE OF DIRECTION. (1133B.5.4.1, FIG 11B-38 & 39)

8. TOP LANDINGS SHALL BE NOT LESS THAN 60 INCHES WIDE AND SHALL HAVE A LENGTH OF NOT LESS THAN 60 INCHES IN THE DIRECTION OF RAMP RUN. LANDINGS AT THE BOTTOM OF RAMPS SHALL HAVE A DIMENSION IN THE DIRECTION OF RAMP RUN OF NOT LESS THAN 72 INCHES. (1133B.5.4.2, FIG 11B-38 & 39)

9. DOORS IN ANY POSITION SHALL NOT REDUCE THE MINIMUM DIMENSION OF THE LANDING TO LESS THAN 42 INCHES AND SHALL NOT REDUCE THE REQUIRED WIDTH BY MORE THAN 3 INCHES WHEN FULLY OPEN. (1133B.5.4.3, FIG 11B-39(B))

10. THE WIDTH OF THE LANDING SHALL EXTEND 24 INCHES PAST THE STRIKE EDGE OF ANY DOOR OR GATE FOR EXTERIOR RAMPS AND 18 INCHES PAST THE STRIKE EDGE FOR INTERIOR RAMPS.(1133B.5.4.4, FIG 11B-39)

11. ALL RAMP LANDINGS SHALL BE LEVEL WITH MAXIMUM SLOPE IN ANY DIRECTION NOT TO EXCEED ¼ INCH PER FOOT (2.083 PERCENT SLOPE). (1133B.5.4.1, 1102B)

12. AT BOTTOM AND INTERMEDIATE LANDINGS, THE WIDTH SHALL BE AT LEAST THE SAME AS REQUIRED FOR THE RAMP. (1133B.5.4.5, FIG 11B-38 & 39)

13. INTERMEDIATE AND BOTTOM LANDINGS AT A CHANGE OF DIRECTION IN EXCESS OF 30 DEGREES SHALL HAVE A DIMENSION IN THE DIRECTION OF RAMP RUN OF NOT LESS THAN 72 INCHES TO ACCOMMODATE THE HANDRAIL EXTENSION. (1133B.5.4.6, FIG 11B-38)

14. OTHER INTERMEDIATE LANDINGS SHALL HAVE A DIMENSION IN THE DIRECTION OF RAMP RUN OF NOT LESS THAN 60 INCHES. (1133B.5.4.7, FIG 11B-38)

15. HANDRAILS ARE REQUIRED ON RAMPS THAT PROVIDE ACCESS IF THE RAMP SLOPE EXCEEDS 1 FOOT RISE IN 20 FEET OF HORIZONTAL RUN (5 PERCENT GRADIENT), EXCEPT THAT AT EXTERIOR DOOR LANDINGS, HANDRAILS ARE NOT REQUIRED ON RAMPS LESS THAN 6 INCHES RISE OR 72 INCHES IN LENGTH. (1133B.5.5.1)

16. HANDRAILS SHALL BE PLACED ON EACH SIDE OF EACH RAMP, SHALL BE CONTINUOUS THE FULL LENGTH OF THE RAMP, SHALL BE 34 TO 38 INCHES ABOVE THE RAMP SURFACE TO THE TOP OF THE HANDRAILS, SHALL EXTEND A MINIMUM OF 1 FOOT BEYOND THE TOP AND BOTTOM OF THE RAMP, AND SHALL PARALLEL THE FLOOR OR GROUND SURFACE. HANDRAILS SHALL ALWAYS BE CONTINUOUS AND THE ENDS OF HANDRAILS SHALL BE EITHER ROUNDED OR RETURNED SMOOTHLY TO THE FLOOR, WALL OR POST. (1133B.5.5.1, FIG 11B-27(B) & (C))

17. THE GRIP PORTION OF HANDRAILS SHALL BE NOT LESS THAN 1 1/4 INCHES NOR MORE THAN 1-1/2 INCHES IN CROSS SECTIONAL NOMINAL DIMENSION, OR THE SHAPE SHALL PROVIDE AN EQUIVALENT GRIPPING SURFACE, AND ALL SURFACES SHALL BE SMOOTH WITH NO SHARP CORNERS. HANDRAILS SHALL NOT ROTATE WITHIN THEIR FITTINGS. (1133B.5.5.1, FIG 11B-36)

G. RAMPS (EXTERIOR OR INTERIOR)

18. HANDRAIL PROJECTING FROM A WALL SHALL HAVE A SPACE OF 1 1/2 INCHES BETWEEN THE WALL AND THE HANDRAIL.(1133B.5.5.1, FIG 11B-36)

A) HANDRAILS MAY BE LOCATED IN A RECESS IF THE RECESS IS A MAXIMUM OF 3 INCHES DEEP AND EXTENDS AT LEAST 18 INCHES ABOVE THE TOP OF THE RAIL. (1133B.5.5.1, FIG 11B-36)

B) ANY WALL OR OTHER SURFACE ADJACENT TO HANDRAILS SHALL BE FREE OF SHARP OR ABRASIVE ELEMENTS. EDGES SHALL HAVE A MINIMUM RADIUS OF 1/8 INCH. (1133B.5.5.1, FIG 11B-36)

19. WHERE THE RAMP SURFACE IS NOT BOUNDED BY A WALL, THE RAMP SHALL COMPLY WITH ONE OF THE FOLLOWING REQUIREMENTS. (1133B.5.6, FIG 11B-27(B) & (C))

A) A GUIDE CURB A MINIMUM OF 2 INCHES IN HEIGHT SHALL BE PROVIDED AT EACH SIDE OF THE RAMP; (1133B.5.6.1) OR

B) A WHEEL GUIDE RAIL SHALL BE PROVIDED, CENTERED 3 INCHES, PLUS OR MINUS 1 INCH ABOVE THE SURFACE OF THE RAMP. (1133B.5.6.2)

20. IN EXISTING BUILDINGS OR FACILITIES WHERE THE EXTENSION OF THE HANDRAIL IN THE DIRECTION OF THE RAMP RUN WOULD CREATE A HAZARD, THE EXTENSION MAY BE TURNED 90 DEGREES TO THE RUN OF THE RAMP. (1133B.5.5.1.1, 1133B.4.2.4)

21. RAMPS MORE THAN 30" ABOVE THE ADJACENT GROUND SHALL BE PROVIDED WITH GUARDS THAT COMPLY WITH SECTION 1013. SUCH GUARDS SHALL BE CONTINUOUS FROM THE TOP OF THE RAMP TO THE BOTTOM OF THE RAMP. (1133B.5.7)

H. ENTRANCES & EXITS

EXIT AS DEFINED IS "THAT PORTION OF A MEANS OF EGRESS SYSTEM WHICH IS SEPARATED FROM OTHER INTERIOR SPACES OF A BUILDING OR STRUCTURE BY FIRE-RESISTANCE-RATED CONSTRUCTION AND OPENING PROTECTIVES AS REQUIRED TO PROVIDE A PROTECTED PATH OF EGRESS TRAVEL BETWEEN THE EXIT ACCESS AND THE EXIT DISCHARGE. EXITS INCLUDE EXTERIOR EXIT DOORS AT GROUND LEVEL, EXIT ENCLOSURES, EXIT PASSAGEWAYS, EXTERIOR EXIT STAIRS, EXTERIOR EXIT RAMPS AND HORIZONTAL EXITS." (1002.1)

PUBLIC WAY AS DEFINED IS "A STREET, ALLEY OR OTHER PARCEL OF LAND OPEN TO THE OUTSIDE AIR LEADING TO A STREET, THAT HAS BEEN DEEDED, DEDICATED OR OTHERWISE PERMANENTLY APPROPRIATED TO THE PUBLIC FOR PUBLIC USE AND WHICH HAS A CLEAR WIDTH AND HEIGHT OF NOT LESS THAN 10 FEET." (1002.1)

1. ALL ENTRANCES AND EXTERIOR GROUND FLOOR EXIT DOORS TO BUILDINGS AND FACILITIES SHALL BE MADE ACCESSIBLE TO PERSONS WITH DISABILITIES. (1133B.1.1.1.1)

2. REVOLVING DOORS SHALL NOT BE USED AS A REQUIRED ENTRANCE FOR PERSONS WITH DISABILITIES. (1133B.2.3.3)

3. DURING PERIODS OF PARTIAL OR RESTRICTED USE OF A BUILDING OR FACILITY, THE ENTRANCES USED FOR PRIMARY ACCESS SHALL BE ACCESSIBLE TO AND USABLE BY PERSONS WITH DISABILITIES. (1133B.1.1.1.2)

4. RECESSED DOORMATS SHALL BE ADEQUATELY ANCHORED TO PREVENT INTERFERENCE WITH WHEELCHAIR TRAFFIC. (1133B.1.1.1.3, FIG 11B-25)

5. ALL GATES, INCLUDING TICKET GATES, SHALL MEET ALL APPLICABLE ACCESSIBILITY SPECIFICATIONS OF DOORS. (1133B.1.1.1.4)

6. EVERY REQUIRED EXIT DOORWAY SHALL BE CAPABLE OF OPENING AT LEAST 90 DEGREES, SHALL HAVE A MINIMUM CLEAR OPENING OF 32 INCHES, AND SHALL BE OF A SIZE AS TO PERMIT THE INSTALLATION OF A DOOR NOT LESS THAN 3 FEET IN WIDTH AND NOT LESS THAN 6'-8" IN HEIGHT. (1133B.2.2)

7. THE SPACE BETWEEN TWO CONSECUTIVE DOOR OPENINGS IN A VESTIBULE, SERVING OTHER THAN A REQUIRED EXIT STAIRWAY, SHALL PROVIDE A MINIMUM OF 48 INCHES OF CLEAR SPACE FROM ANY DOOR OPENING INTO SUCH VESTIBULE WHEN THE DOOR IS POSITIONED AT AN ANGLE OF 90 DEGREES FROM ITS CLOSED POSITION. DOORS IN A SERIES SHALL SWING EITHER IN THE SAME DIRECTION OR AWAY FROM THE SPACE BETWEEN THE DOORS. SEE FIGURES 11B-30 & 11B-31. (1133B.2.4.4)

I. DOORS

1. DOOR HANDLES, PULLS, LATCHES, LOCKS AND OTHER OPERATING DEVICES ON DOORS REQUIRED TO BE ACCESSIBLE SHALL NOT REQUIRE TIGHT GRASPING, TIGHT PINCHING OR TWISTING OF THE WRIST TO OPERATE. MANUALLY OPERATED BOLTS OR SURFACE BOLTS ARE NOT PERMITTED. THE UNLATCHING OF ANY DOOR OR LEAF SHALL NOT REQUIRE MORE THAN ONE OPERATION. (1008.1.8)

2. LATCHING AND LOCKING DOORS THAT ARE HAND ACTIVATED AND WHICH ARE IN A PATH OF TRAVEL SHALL BE OPERABLE WITH A SINGLE EFFORT BY LEVER TYPE HARDWARE, BY PANIC BARS, PUSH-PULL ACTIVATING BARS, OR OTHER HARDWARE DESIGNED TO PROVIDE PASSAGE WITHOUT REQUIRING THE ABILITY TO GRASP THE OPENING HARDWARE. (1133B.2.5.2)

3. HAND-ACTIVATED DOOR OPENING HARDWARE SHALL BE CENTERED BETWEEN 30" AND 44" ABOVE THE FLOOR. (1133B.2.5.2)

4. WHEN INSTALLED, DOORWAYS SHALL HAVE A MINIMUM CLEAR OPENING OF 32 INCHES WITH THE DOOR OPEN 90 DEGREES. (1133B.1.1.1.1, FIG 11B -5B & 11B-33)

5. FOR HINGED DOORS, THE OPENING WIDTH SHALL BE MEASURED WITH THE DOOR POSITIONED AT AN ANGLE OF 90 DEGREES FROM ITS CLOSED POSITION. (1133B.2.3, FIG 11B-5B)

6. WHERE A PAIR OF DOORS IS UTILIZED, AT LEAST ONE OF THE DOORS SHALL PROVIDE A CLEAR, UNOBSTRUCTED OPENING WIDTH OF 32 INCHES WITH THE LEAF POSITIONED AT AN ANGLE OF 90 DEGREES FROM ITS CLOSED POSITION. (1133B.2.3.1)

7. WHEN AN AUTOMATIC OR POWER ASSISTED DOOR OPERATOR IS UTILIZED TO OPERATE A PAIR OF DOORS, AT LEAST ONE OF THE DOORS SHALL PROVIDE A CLEAR, UNOBSTRUCTED OPENING WIDTH OF 32" WITH THE DOOR POSITIONED AT AN ANGLE OF 90 DEGREES FROM ITS CLOSED POSITION. AUTOMATIC DOORS SHALL COMPLY WITH BHMA A156.10 OR BHMA A156.19. (1133B.2.3.2)

8. MINIMUM MANEUVERING CLEARANCES AT DOORS SHALL BE AS SHOWN IN FIGURE 11B-26A & 11B-26B. THE FLOOR OR GROUND AREA WITHIN THE REQUIRED CLEARANCES SHALL BE LEVEL AND CLEAR. (1133B.2.4.2)

9. THERE SHALL BE A LEVEL AND CLEAR FLOOR OR LANDING ON EACH SIDE OF A DOOR. THE LEVEL AREA SHALL HAVE A LENGTH IN THE DIRECTION OF DOOR SWING OF AT LEAST 60" AND THE LENGTH OPPOSITE THE DIRECTION OF DOOR SWING OF 48" AS MEASURED AT RIGHT ANGLES TO THE PLANE OF THE DOOR IN THE CLOSED POSITION. WHERE THE PLANE OF THE DOORWAY IS OFFSET OR LOCATED IN AN ALCOVE A DISTANCE MORE THAN 8 INCHES MEASURED FROM THE PLANE OF THE DOORWAY TO THE FACE OF THE WALL, THE DOOR SHALL BE PROVIDED WITH 60" MANEUVERING CLEARANCE FOR FRONT APPROACH. (1133B.2.4.2, 1133B.2.5.3, FIG 11B-26, FIG 11B-33A)

I. DOORS (CONT'D)

10. THE WIDTH OF THE LEVEL AREA ON THE SIDE TO WHICH THE DOOR SWINGS SHALL EXTEND 24 INCHES PAST THE STRIKE EDGE OF THE DOOR FOR EXTERIOR DOORS AND 18 INCHES PAST THE STRIKE EDGE FOR INTERIOR DOORS. WHERE THE PLANE OF THE DOORWAY IS OFFSET 8 OR MORE INCHES FROM ANY OBSTRUCTION WITHIN 18 INCHES MEASURED LATERALLY ON THE LATCH SIDE, THE DOOR SHALL BE PROVIDED WITH MANEUVERING CLEARANCE FOR FRONT APPROACH. (1133B.2.4.3, 1133B.2.4.5, 1133B.2.5.3, FIG 11B-33(A))

11. PROVIDE CLEAR SPACE OF 12" PAST STRIKE EDGE OF THE DOOR ON THE OPPOSITE SIDE TO WHICH THE DOOR SWINGS IF THE DOOR IS EQUIPPED WITH BOTH A LATCH AND A CLOSER. (FIG 11B-26(A))

12. THE FLOOR OR LANDING SHALL BE NOT MORE THAN ½ INCH LOWER THAN THE THRESHOLD OF THE DOORWAY. (1133B.2.4.1)

13. THE BOTTOM 10" OF ALL DOORS EXCEPT AUTOMATIC AND SLIDING SHALL HAVE A SMOOTH, UNINTERRUPTED SURFACE TO ALLOW THE DOOR TO BE OPENED BY A WHEELCHAIR FOOTREST WITHOUT CREATING A TRAP OR HAZARDOUS CONDITION. WHERE NARROW FRAME DOORS ARE USED, A 10" HIGH SMOOTH PANEL SHALL BE INSTALLED ON THE PUSH SIDE OF THE DOOR, WHICH WILL ALLOW THE DOOR TO BE OPENED BY A WHEELCHAIR FOOTREST WITHOUT CREATING A TRAP OR HAZARDOUS CONDITION. (1133B.2.6, FIG 11B-29)

14. MAXIMUM EFFORT TO OPERATE EXTERIOR AND INTERIOR DOORS SHALL NOT EXCEED 5 POUNDS, WITH SUCH PULL OR PUSH EFFORT BEING APPLIED AT RIGHT ANGLES TO HINGED DOORS AND AT THE CENTER PLANE OF SLIDING OR FOLDING DOORS. COMPENSATING DEVICES OR AUTOMATIC DOOR OPERATORS MAY BE UTILIZED TO MEET THE ABOVE STANDARDS. WHEN FIRE DOORS ARE REQUIRED, THE MAXIMUM EFFORT TO OPERATE THE DOOR MAY BE INCREASED TO THE MINIMUM ALLOWABLE BY THE APPROPRIATE ADMINISTRATIVE AUTHORITY, NOT TO EXCEED 15 LBF. (1133B.2.5)

15. WHEN THE DOOR HAS A CLOSER, THEN THE SWEEP PERIOD OF THE CLOSER SHALL BE ADJUSTED SO THAT FROM AN OPEN POSITION OF 70 DEGREES, THE DOOR WILL TAKE AT LEAST 3 SECONDS TO MOVE TO A POINT 3 INCHES FROM THE LATCH, MEASURED TO THE LANDING EDGE OF THE DOOR. (1133B.2.5.1)

16. WHERE TURNSTILES AND CROWD CONTROL BARRIERS ARE UTILIZED IN A FACILITY FOR THE PURPOSE OF PROVIDING FULLY CONTROLLED ACCESS, SUCH AS WHERE AN ADMISSION PRICE IS CHARGED, A DOOR OR GATE THAT IS ACCESSIBLE TO PERSONS WITH DISABILITIES SHALL BE PROVIDED ADJACENT TO EACH TURNSTILE EXIT OR ENTRANCE. THIS ALTERNATE PASSAGEWAY SHALL BE MAINTAINED IN AN UNLOCKED CONDITION DURING BUSINESS HOURS AND THE DOOR OR GATE SHALL NOT ACTIVATE A PUBLICLY AUDIBLE ALARM SYSTEM. THE DOOR OR GATE MAY BE LATCHED WHERE ALL GATES ARE RESTRICTED AND CONTROLLED BY AN ATTENDANT AND A SIGN IS POSTED STATING, "ALL GATES ARE RESTRICTED AND CONTROLLED BY AN ATTENDANT." THE ACCESSIBLE DOOR OR GATE SHALL PROVIDE THE SAME USE PATTERN. WHERE POSTS, RAILS, OR OTHER PEDESTRIAN CONTROLS ARE UTILIZED TO CREATE CROWD CONTROL AISLES OR LANES, A MINIMUM AISLE WIDTH NOT LESS THAN INDICATED IN FIGURE 11B-5E (A) AND (B) WITH 32 INCHES OF CLEAR OPENING. (1133B.2.3.4)

J. FLOORS AND LEVELS

LEVEL AREA IS DEFINED AS "A SPECIFIED SURFACE THAT DOES NOT HAVE A SLOPE IN ANY DIRECTION EXCEEDING 1/4 INCH IN ONE FOOT FROM THE HORIZONTAL (2.083% GRADIENT)." (1102B)

1. IN BUILDINGS AND FACILITIES, FLOORS OF A GIVEN STORY SHALL BE A COMMON LEVEL THROUGHOUT, OR SHALL BE CONNECTED BY PEDESTRIAN RAMPS, PASSENGER ELEVATORS, OR SPECIAL ACCESS LIFTS. (1120B.1)

2. GROUND AND FLOOR SURFACES ALONG ACCESSIBLE ROUTES AND IN ACCESSIBLE ROOMS AND SPACES, INCLUDING FLOORS, WALKS, RAMPS, STAIRS, AND CURB RAMPS, SHALL BE STABLE, FIRM, AND SLIP-RESISTANT. (1120B.2 & 1124B.1)

3. CHANGES IN LEVEL UP TO ¼ INCH MAY BE VERTICAL AND WITHOUT EDGE TREATMENT. (1124B.2, FIG 11B-5E(C))

4. CHANGES IN LEVEL BETWEEN ¼ INCH AND ½ INCH SHALL BE BEVELED WITH A SLOPE NO STEEPER THAT 1:2. (1124B.2, FIG 11B-5E(D))

5. IF CARPET OR CARPET TILE IS USED ON A GROUND OR FLOOR SURFACE, IT SHALL BE SECURELY ATTACHED; HAVE A FIRM CUSHION, PAD OR BACKING OR NO CUSHION OR PAD; AND HAVE A LEVEL LOOP, TEXTURED LOOP, LEVEL CUT PILE, OR LEVEL CUT/UNCUT PILE TEXTURE. THE MAXIMUM PILE HEIGHT SHALL BE ½ INCH. EXPOSED EDGES OF CARPET SHALL BE FASTENED TO FLOOR SURFACES AND HAVE TRIM ALONG THE ENTIRE LENGTH OF THE EXPOSED EDGE. CARPET EDGE TRIM SHALL COMPLY WITH SECTION 1124B.2. (1124B.3, FIG 11B-7E)

6. IF GRATINGS ARE LOCATED ON FLOORS, THEN THEY SHALL HAVE SPACES NO GREATER THAN ½ INCH WIDE IN ONE DIRECTION. IF GRATINGS HAVE ELONGATED OPENINGS, THEY SHALL BE PLACED SO THAT THE LONG DIMENSION IS PERPENDICULAR TO THE DOMINANT DIRECTION OF TRAVEL. (1124B.4, FIG 11B-7E)

K. CORRIDORS & AISLES

1. EVERY CORRIDOR AND HALLWAY SERVING AN OCCUPANT LOAD OF 10 OR MORE SHALL NOT BE LESS THAN 44 INCHES IN WIDTH. (1133B.3.1)

2. CORRIDORS AND HALLWAYS SERVING AN OCCUPANT LOAD OF LESS THAN 10 SHALL NOT BE LESS THAN 36 INCHES IN WIDTH. (1133B.3.1)

3. CORRIDORS WHICH ARE LOCATED ON ACCESSIBLE ROUTE AND EXCEED 200 FEET IN LENGTH SHALL:(1133B.3.2, FIG 11B-34)

A) HAVE A MINIMUM CLEAR WIDTH OF 60"; OR

B) HAVE, AT REASONABLE INTERVALS, A 60 INCHES BY 60 INCHES MINIMUM WHEELCHAIR TURNING SPACE OR PASSING ALCOVE; NOT TO EXCEED 200 FEET; OR

C) HAVE, AT A CENTRAL LOCATION, AN INTERVENING CROSSING OR TEE CORRIDOR, A MINIMUM OF 44 INCHES IN WIDTH

4. CIRCULATION AISLES AND PEDESTRIAN WAYS SHALL BE SIZED ACCORDING TO FUNCTIONAL REQUIREMENTS AND IN NO CASE SHALL BE LESS THAN 36 INCHES IN CLEAR WIDTH. (1105B.3.6)

5. EVERY PORTION OF EVERY BUILDING IN WHICH ARE INSTALLED SEATS, TABLES, MERCHANDISE, EQUIPMENT, OR SIMILAR MATERIALS SHALL BE PROVIDED WITH AISLES LEADING TO AN EXIT. (1133B.6.1)

6. EVERY AISLE SHALL BE NOT LESS THAN 36 INCHES WIDE IF SERVING ONLY ONE SIDE, AND NOT LESS THAN 44 INCHES WIDE IF SERVING BOTH SIDES. (1133B.6.2)

L. HAZARDS AND PROTRUDING OBJECTS

1. ABRUPT CHANGES IN LEVEL, EXCEPT BETWEEN A WALK OR SIDEWALK AND AN ADJACENT STREET OR DRIVEWAY, EXCEEDING 4 INCHES IN A VERTICAL DIMENSION, SUCH AS AT PLANTERS OR FOUNTAINS LOCATED IN OR ADJACENT TO WALKS, SIDEWALKS, OR OTHER PEDESTRIAN WAYS, SHALL BE IDENTIFIED BY WARNING CURBS PROJECTING AT LEAST 6 INCHES IN HEIGHT ABOVE THE WALK OR SIDEWALK SURFACE TO WARN THE BLIND OF A POTENTIAL DROP OFF. (1133B.8.1)

2. WHEN A GUARD OR HANDRAIL IS PROVIDED, NO CURB IS REQUIRED WHEN A GUIDE RAIL IS PROVIDED CENTERED 3 INCHES PLUS OR MINUS 1 INCH ABOVE THE SURFACE OF THE WALK OR SIDEWALK, THE WALK IS 5 PERCENT OR LESS GRADIENT OR NO ADJACENT HAZARD EXISTS. (1133B.8.1, FIG 11B-27(C)

3. OBJECTS PROJECTING FROM WALLS WITH THEIR LEADING EDGES BETWEEN 27 INCHES AND 80 INCHES ABOVE THE FINISHED FLOOR SHALL PROTRUDE NO MORE THAN 4 INCHES INTO WALKS, HALLS, CORRIDORS, PASSAGEWAYS, OR AISLES. (1133B.8.6.1, FIG 11B-7A)

4. OBJECTS MOUNTED WITH THEIR LEADING EDGES AT OR BELOW 27 INCHES ABOVE THE FINISHED FLOOR MAY PROTRUDE ANY AMOUNT INTO WALKS, HALLS, CORRIDORS, PASSAGEWAYS, OR AISLES. (1133B.8.6.1, FIG 11B-7A)

5. FREE-STANDING OBJECTS MOUNTED ON POSTS OR PYLONS MAY OVERHANG 12 INCHES MAXIMUM FROM 27 INCHES TO 80 INCHES ABOVE THE GROUND OR FINISHED FLOOR. (1133B.8.6.1, FIG 11B-7B)

6. PROTRUDING OBJECTS SHALL NOT REDUCE THE CLEAR WIDTH OF AN ACCESSIBLE ROUTE OR MANEUVERING SPACE. (1133B.8.6.1, FIG 11B-7D)

7. WALKS, HALLS, CORRIDORS, PASSAGEWAYS, AISLES, OR OTHER CIRCULATION SPACES SHALL HAVE 80 INCHES MINIMUM CLEAR HEAD ROOM. (1133B.8.6.2, FIG 11B-7A & 7C)

8. ANY OBSTRUCTION THAT OVERHANGS A PEDESTRIAN WAY SHALL BE A MINIMUM OF 80 INCHES ABOVE THE WALKING SURFACE AS MEASURED FROM THE BOTTOM OF THE OBSTRUCTION. (1133B.8.2, FIG 11B-28)

9. WHERE A GUY SUPPORT IS USED PARALLEL TO A PATH OF TRAVEL, INCLUDING, BUT NOT LIMITED TO SIDEWALKS, A GUY BRACE, SIDEWALK GUY OR SIMILAR DEVICE SHALL BE USED TO PREVENT AN OVERHANGING OBSTRUCTION AS DEFINED. (1133B.8.2)

10. IF A WALK CROSSES OR ADJOINS A VEHICULAR WAY, AND THE WALKING SURFACES ARE NOT SEPARATED BY CURBS, RAILINGS, OR OTHER ELEMENTS BETWEEN THE PEDESTRIAN AREAS AND VEHICULAR AREAS, THE BOUNDARY BETWEEN THE AREAS SHALL BE DEFINED BY A CONTINUOUS DETECTABLE WARNING WHICH IS 36 INCHES WIDE, COMPLYING WITH SECTION 1121B.3.1, ITEM 8(A). (1133B.8.5)

11. TRANSIT BOARDING PLATFORMS SHALL CONFORM TO THE REQUIREMENTS OF SECTION 1121B.3.1, ITEM 8(B). ONLY APPROVED DSA/AC DETECTABLE WARNING PRODUCTS AND DIRECTIONAL SURFACES SHALL BE INSTALLED AS PROVIDED IN THE CALIFORNIA CODE OF REGULATIONS, TITLE 24, PART 1, ARTICLES 2, 3, AND 4. (1133B.8.4 & 1133B.8.5)

M. STAIRWAYS

1. STAIRWAYS SHALL HAVE HANDRAILS ON EACH SIDE, AND EVERY STAIRWAY REQUIRED TO BE MORE THAN 88 INCHES IN WIDTH SHALL BE PROVIDED WITH NOT LESS THAN ONE INTERMEDIATE HANDRAIL FOR EACH 88 INCHES OF REQUIRED WIDTH. INTERMEDIATE HANDRAILS SHALL BE SPACED APPROXIMATELY EQUALLY ACROSS THE ENTIRE WIDTH OF THE STAIRWAY. HANDRAILS SHALL BE CONTINUOUS ALONG BOTH SIDES OF THE STAIRWAY. (1133B.4.1.1)

2. THE TOP OF HANDRAIL GRIPPING SURFACE SHALL BE MOUNTED 34 TO 38 INCHES ABOVE THE NOSING OF THE TREADS. (1133B.4.2.1, FIG 11B-35)

3. HANDRAILS SHALL EXTEND A MINIMUM OF 12 INCHES BEYOND THE TOP NOSING AND 12 INCHES PLUS THE TREAD WIDTH BEYOND THE BOTTOM NOSING AND ENDS SHALL BE RETURNED OR TERMINATE IN NEWEL POSTS OR SAFETY TERMINALS. (1133B.4.2.2, 1133B4.2.3, FIG 11B-35, 37)

M. STAIRWAYS (CONT'D)

4. THE HANDGRIP PORTION OF HANDRAILS SHALL BE NOT LESS THAN 1-1/4 INCHES OR MORE THAN 1-1/2 INCHES IN CROSS-SECTIONAL NOMINAL DIMENSION OR THE SHAPE SHALL PROVIDE AN EQUIVALENT GRIPPING SURFACE. THE HANDGRIP PORTION OF HANDRAILS SHALL HAVE A SMOOTH SURFACE WITH NO SHARP CORNERS. GRIPPING SURFACES (TOP OR SIDES) SHALL BE UNINTERRUPTED BY NEWEL POSTS, OTHER CONSTRUCTION ELEMENTS, OR OBSTRUCTIONS. ANY WALL OR OTHER SURFACE ADJACENT TO THE HANDRAIL SHALL BE FREE OF SHARP OR ABRASIVE ELEMENTS. EDGES SHALL HAVE A MINIMUM RADIUS OF 1/8 INCH.(1133B.4.2.6, FIG 11B-36)

5. THE ORIENTATION OF AT LEAST ONE HANDRAIL SHALL BE IN THE DIRECTION OF THE RUN OF THE STAIR AND PERPENDICULAR TO THE DIRECTION OF THE STAIR NOSING, AND SHALL NOT REDUCE THE MINIMUM REQUIRED WIDTH OF STAIRS. (1133B.4.2.4)

6. HANDRAILS PROJECTING FROM A WALL SHALL HAVE A SPACE OF 1-1/2 INCHES BETWEEN THE WALL AND THE HANDRAIL. HANDRAILS MAY BE LOCATED IN A RECESS IF THE RECESS IS A MAXIMUM OF 3 INCH DEEP AND EXTENDS AT LEAST 18 INCHES ABOVE THE TOP OF THE RAIL. HANDRAILS SHALL NOT ROTATE WITHIN THEIR FITTING. (1133B.4.2.5, FIG 11B-36)

7. THE UPPER APPROACH AND THE LOWER TREAD OF EACH STAIR SHALL BE MARKED BY A STRIP OF CLEARLY CONTRASTING COLOR AT LEAST 2 INCHES WIDE PLACED PARALLEL TO AND NOT MORE THAN ONE INCH FROM THE NOSE OF THE STEP OR LANDING TO ALERT THE VISUALLY IMPAIRED. THE STRIP SHALL BE OF MATERIAL THAT IS AT LEAST AS SLIP RESISTANT AS THE OTHER TREADS OF THE STAIR. (1133B.4.4, FIG 11B-35)

8. WHERE STAIRWAYS OCCUR OUTSIDE A BUILDING, THE UPPER APPROACH AND ALL TREADS SHALL BE MARKED BY A STRIP OF CLEARLY CONTRASTING COLOR AT LEAST 2 INCHES WIDE AND PLACED PARALLEL TO AND NOT MORE THAN 1" FROM THE NOSE OF THE STEP OR LANDING TO ALERT THE VISUALLY IMPAIRED. THE STRIP SHALL BE OF A MATERIAL THAT IS AT LEAST AS SLIP-RESISTANT AS THE OTHER TREADS OF THE STAIR. A PAINTED STRIP SHALL BE ACCEPTABLE. (1133B.4.4, FIG 11B-35)

9. ALL TREAD SURFACES SHALL BE SLIP-RESISTANT. WEATHER EXPOSED STAIRS AND THEIR APPROACHES SHALL BE DESIGNED SO THAT WATER WILL NOT ACCUMULATE ON WALKING SURFACES. TREADS SHALL HAVE SMOOTH, ROUNDED, OR CHAMFERED EXPOSED EDGES, AND NO ABRUPT EDGES AT THE NOSING (LOWER FRONT EDGE). (1133B.4.5.1, FIG 11B-35)

10. THE NOSING SHALL NOT PROJECT MORE THAN 1-1/2 INCHES PAST THE FACE OF THE RISER BELOW. (1133B.4.5.2, FIG 11B-35)

11. OPEN RISERS ARE NOT PERMITTED. ON ANY GIVEN FLIGHT OF STAIRS, ALL STEPS SHALL HAVE UNIFORM RISER HEIGHT AND UNIFORM TREAD WIDTHS CONSISTENT WITH 1133B.4. STAIR TREADS SHALL BE NO LESS THAN 11 INCHES DEEP, MEASURED FROM RISER TO RISER. RISERS SHALL BE SLOPED OR THE UNDERSIDE OF THE NOSING SHALL HAVE AN ANGLE NOT LESS THAN 60 DEGREES FROM THE HORIZONTAL. (1133B.4.5.3, FIG 11B-35)

12. TACTILE FLOOR DESIGNATION SIGNS THAT COMPLY WITH SECTION 1117B.5.1 SHALL BE LOCATED AT EACH FLOOR LEVEL LANDING IN ALL ENCLOSED STAIRWAYS IN BUILDINGS TWO OR MORE STORIES IN HEIGHT TO IDENTIFY THE FLOOR LEVEL. AT EXIT DISCHARGE LEVEL, THE SIGN SHALL INCLUDE A RAISED FIVE-POINTED STAR LOCATED TO THE LEFT OF THE IDENTIFYING FLOOR LEVEL. THE OUTSIDE DIAMETER OF THE STAR SHALL BE THE SAME AS THE HEIGHT OF THE RAISED CHARACTERS. (1133B.4.3)

N. CONTROLS & OPERATING MECHANISMS

1. CONTROLS AND OPERATING MECHANISMS IN ACCESSIBLE SPACES, ALONG ACCESSIBLE ROUTES OR AS PART OF ACCESSIBLE ELEMENTS AND THOSE IN SECTION 109.1 ARE REQUIRED TO BE ACCESSIBLE. (1117B.6.1)

2. CLEAR FLOOR SPACE COMPLYING WITH SECTION 1118B.4 THAT ALLOWS A FORWARD OR PARALLEL APPROACH BY A PERSON USING A WHEELCHAIR SHALL BE PROVIDED AT CONTROLS, DISPENSERS, RECEPTACLES, AND OTHER OPERABLE EQUIPMENT. (1117B.6.2)

3. THE HIGHEST AND LOWEST OPERABLE PART OF ALL CONTROLS, DISPENSERS, RECEPTACLES, AND OTHER OPERABLE EQUIPMENT SHALL BE PLACED WITHIN ONE OF THE REACH RANGES SPECIFIED IN SECTIONS 1118B.5 AND 1118B.6. ELECTRICAL AND COMMUNICATION SYSTEM RECEPTACLES ON WALLS SHALL BE MOUNTED NO LESS THAN 15 INCHES ABOVE THE FLOOR. (1117B.6.3)

4. CONTROLS AND OPERATING MECHANISMS SHALL BE OPERABLE WITH ONE HAND AND SHALL NOT REQUIRE TIGHT GRASPING, PUNCHING, OR TWISTING OF THE WRIST. TO FORCE REQUIRED TO ACTIVATE CONTROLS SHALL BE NO GREATER THAN 5 POUNDS OF FORCE. (1117B.6.4)

5. FOR ACCESSIBLE LAVATORIES, FAUCET CONTROLS AND OPERATING MECHANISMS SHALL BE OPERABLE WITH ONE HAND AND SHALL NOT REQUIRE GRASPING, PINCHING, OR TWISTING OF THE WRIST. THE FORCE REQUIRED TO ACTIVE FAUCET CONTROLS AND OPERATING MECHANISMS SHALL BE NO GREATER THAN 5 LBF. LEVER-OPERATED, PUSH-TYPE, AND ELECTRONICALLY CONTROLLED MECHANISMS ARE EXAMPLES OF ACCEPTABLE DESIGNS. SELF-CLOSING VALVES ARE ALLOWED IF THE FAUCET REMAINS OPEN FOR AT LEAST 10 SECONDS. (1115B.4.3)

O. SPACE ALLOWANCE & REACH RANGES

1. THE MINIMUM CLEAR FLOOR OR GROUND SPACE REQUIRED TO ACCOMMODATE A SINGLE, STATIONARY WHEELCHAIR AND OCCUPANT IS 30 INCHES BY 48 INCHES. THE MINIMUM CLEAR FLOOR OR GROUND SPACE FOR WHEELCHAIRS MAY BE POSITIONED FOR FORWARD OR PARALLEL APPROACH TO AN OBJECT. CLEAR FLOOR OR GROUND SPACE FOR WHEELCHAIRS MAY BE A PART OF THE KNEE SPACE REQUIRED UNDER SOME OBJECTS. (1117B.2.3, 1118B.4.1, FIG 11-B-5A)

2. ONE FULL UNOBSTRUCTED SIDE OF THE CLEAR FLOOR OR GROUND SPACE FOR A WHEELCHAIR SHALL ADJOIN OR OVERLAP AN ACCESSIBLE ROUTE OR ADJOIN ANOTHER WHEELCHAIR CLEAR FLOOR SPACE. IF A CLEAR FLOOR OR GROUND SPACE IS LOCATED IN AN ALCOVE OR OTHERWISE CONFINED ON ALL OR PART OF THREE SIDES, ADDITIONAL MANEUVERING CLEARANCES SHALL BE PROVIDED. (1117B.2.4, 1118B.4.2, FIG 11-B-5A)

3. THE SPACE REQUIRED FOR A WHEELCHAIR TO MAKE A 180 DEGREE TURN IS A CLEAR SPACE OF 60" DIAMETER OR A T-SHAPED SPACE.(1118B.3, FIG 11B-12(A) & (B))

4. THE MINIMUM CLEAR WIDTH REQUIRED FOR A WHEELCHAIR TO TURN AROUND AN OBSTRUCTION SHALL BE 36 INCHES WHERE THE OBSTRUCTION IS 48 INCHES OR MORE IN LENGTH AND 42 INCHES AND 48 INCHES WHERE THE OBSTRUCTION IS LESS THAN 48 INCHES IN LENGTH. (FIG 11B-5E)

5. THE MINIMUM CLEAR WIDTH FOR SINGLE WHEELCHAIR PASSAGE SHALL BE 32 INCHES AT A POINT AND 36 INCHES CONTINUOUSLY. (1118B.1, FIG 11B-10)

6. THE MINIMUM WIDTH FOR TWO WHEELCHAIRS TO PASS IS 60 INCHES. (1118B.2, FIG 11B-11)

7. IF THE CLEAR FLOOR SPACE ONLY ALLOWS FORWARD APPROACH TO AN OBJECT, THE MAXIMUM HIGH FORWARD REACH ALLOWED SHALL BE 48 INCHES. SEE FIGURE 11B-¬5C(A). THE MINIMUM LOW FORWARD REACH IS 15 INCHES. IF THE HIGH FORWARD REACH IS OVER AN OBSTRUCTION, REACH AND CLEARANCES SHALL BE AS SHOWN IN FIGURE 11B-5C(B). (1118B.5)

8. IF THE CLEAR FLOOR SPACE ALLOWS PARALLEL APPROACH BY A PERSON IN A WHEELCHAIR, THE MAXIMUM HIGH SIDE REACH ALLOWED SHALL BE 54 INCHES AND THE LOW SIDE REACH SHALL BE NO LESS THAN 9 INCHES ABOVE THE FLOOR AS SHOWN IN FIGURES I 1 B-5D(A) & (B). IF THE SIDE REACH IS OVER AND OBSTRUCTION, THE REACH AND CLEARANCES SHALL BE AS SHOWN IN FIGURE 11B-5D(C). (1118B.6)

P. EMPLOYEE WORK AREAS & WORK STATIONS

WORK STATION IS DEFINED AS "AN AREA DEFINED BY EQUIPMENT AND/OR WORK SURFACES INTENDED FOR USE BY EMPLOYEES ONLY, GENERALLY FOR ONE OR A SMALL NUMBER OF EMPLOYEES AT A TIME..." (1102B)

1. EMPLOYEE AREAS SHALL CONFORM TO ALL REQUIREMENTS OF THE DIVISION OF THE STATE ARCHITECT - ACCESS COMPLIANCE IN THE CALIFORNIA BUILDING CODE, PLUMBING CODE, AND ELECTRICAL CODE. (1123B.1)

2. SPECIFIC WORKSTATIONS NEED ONLY COMPLY WITH AISLE WIDTH AND FLOORS AND LEVELS, AND ENTRY-WAYS SHALL BE 32 INCHES IN CLEAR WIDTH. AISLES SHALL NOT BE LESS THAN 36 INCHES IF SERVING ONLY ONE SIDE, AND NOT LESS THAN 44 INCHES WIDE IF SERVING BOTH SIDES. (1123B.2,1133B.6.2)

3. EMPLOYEE WORK AREAS SHALL BE ACCESSIBLE BY MEANS OF 36 INCH MINIMUM AISLE AND 32 INCH MINIMUM CLEAR OPENING DOOR WIDTH. (1105B.3.2.3)

Q. FIXED OR BUILT-IN SEATING, TABLES AND COUNTERS

1. WHERE FIXED OR BUILT-IN SEATING, TABLES, OR COUNTERS ARE PROVIDED FOR THE PUBLIC, AND IN GENERAL EMPLOYEE AREAS, FIVE PERCENT BUT NEVER LESS THAN ONE MUST BE ACCESSIBLE, AS REQUIRED IN SECTION 1122B. (1122B.1)

2. IF SEATING SPACES FOR PERSONS IN WHEELCHAIRS ARE PROVIDED AT FIXED TABLES OR COUNTERS, CLEAR FLOOR SPACE COMPLYING WITH SECTION 1118B.4 SHALL BE PROVIDED. SUCH CLEAR FLOOR SPACE SHALL NOT OVERLAP KNEE SPACE BY MORE THAN 19 INCHES. (1122B.2, FIG 11B-13)

3. IF SEATING FOR PERSONS IN WHEELCHAIRS IS PROVIDED AT FIXED TABLES OR COUNTERS, KNEE SPACES AT LEAST 27 INCHES HIGH, 30 INCHES WIDE, AND 19 INCHES DEEP SHALL BE PROVIDED. (1122B.3, FIG 11B-13)

4. THE TOPS OF TABLES AND COUNTERS SHALL BE 28 INCHES TO 34 INCHES FROM THE FLOOR OR GROUND. (1122B.4)

5. WHERE A SINGLE COUNTER CONTAINS MORE THAN ONE TRANSACTION STATION, SUCH AS A BANK COUNTER WITH MULTIPLE TELLER WINDOWS OR A RETAIL SALES COUNTER WITH MULTIPLE CASH REGISTER STATIONS, AT LEAST 5 PERCENT, BUT NEVER LESS THAN ONE OF EACH TYPE OF STATION SHALL BE LOCATED AT A SECTION OF COUNTER THAT IS AT LEAST 36 INCHES LONG AND NO MORE THAN 28 TO 34 INCHES HIGH. (1122B.4)

R. SIGNS & IDENTIFICATION

CALIFORNIA'S STANDARDS FOR SIGNAGE ARE MORE STRINGENT AND ARE SIGNIFICANTLY LARGER AND WIDER THAN FEDERAL LAW, AMERICANS WITH DISABILITIES ACT (ADA) SECTION 4.30. (1117B.5)

THE INTERNATIONAL SYMBOL OF ACCESSIBILITY SHALL BE THE STANDARD USED TO IDENTIFY FACILITIES THAT ARE ACCESSIBLE TO AND USABLE BY PHYSICALLY DISABLED PERSONS AS SET FORTH IN TITLE 24 AND AS SPECIFICALLY REQUIRED IN THIS SECTION. (1117B.5.8.1, FIG 11B-6)

1. THE INTERNATIONAL SYMBOL OF ACCESSIBILITY SHALL CONSIST OF A WHITE FIGURE ON A BLUE BACKGROUND. THE BLUE SHALL BE EQUAL TO COLOR NO. 15090 IN FEDERAL STANDARD 595B. (1117B5.8.1.1)

R. SIGNS & IDENTIFICATION (CONT'D)

2. ALL BUILDING AND FACILITY ENTRANCES THAT ARE ACCESSIBLE TO AND USABLE BY PERSONS WITH DISABILITIES AND AT EVERY MAJOR JUNCTION ALONG OR LEADING TO AN ACCESSIBLE ROUTE OF TRAVEL SHALL BE IDENTIFIED WITH A SIGN DISPLAYING THE INTERNATIONAL SYMBOL OF ACCESSIBILITY AND WITH ADDITIONAL DIRECTIONAL SIGNS, AS REQUIRED, TO BE VISIBLE TO PERSONS ALONG APPROACHING CIRCULATION PATHS. (1117B.5.8.1.2. & 1127B.3)

3. WHEN PERMANENT IDENTIFICATION IS PROVIDED FOR ROOMS AND SPACES OF A BUILDING OR SITE, RAISED LETTERS SHALL BE PROVIDED AND SHALL BE ACCOMPANIED BY BRAILLE IN CONFORMANCE WITH SECTION 1117B.5.2 THROUGH 1117B.5.7. SIGNS SHALL BE INSTALLED ON THE WALL ADJACENT TO THE LATCH OUTSIDE OF THE DOOR. WHERE THERE IS NO WALL SPACE ON THE LATCH SIDE, INCLUDING AT DOUBLE LEAF DOORS, SIGNS SHALL BE PLACED ON THE NEAREST ADJACENT WALL, PREFERABLY ON THE RIGHT. MOUNTING HEIGHT SHALL BE 60 INCHES ABOVE THE FINISHED FLOOR TO THE CENTERLINE OF THE SIGN. MOUNTING LOCATION SHALL BE DETERMINED SO THAT A PERSON MAY APPROACH WITHIN 3INCHES OF SIGNAGE WITHOUT ENCOUNTERING PROTRUDING OBJECTS OR STANDING WITHIN THE SWING OF A DOOR. (1117B.5.1, 1117B.5.7)

4. WHEN SIGNS DIRECT TO OR GIVE INFORMATION ABOUT PERMANENT ROOMS AND FUNCTIONAL SPACES OF A BUILDING OR SITE, THEY SHALL COMPLY WITH SECTIONS 1117B.5.2, 1117B.5.3, 1117B.5.4. MEANS OF EGRESS SIGNS AND IDENTIFICATION FOR VISUAL EXIT SIGNS, GRAPHICS, ILLUMINATION, POWER SOURCE, TACTILE EXIT SIGNAGE, TACTILE STAIR LEVEL IDENTIFICATION AND SPECIAL EGRESS CONTROL DEVICES SHALL COMPLY WITH SECTIONS 1003.2.8.1, 1003.2.8.5, 1003.2.9, 1003.2.10 AND 1003.3.1.10. (1117B.5.1.2)

5. WHEN RAISED CHARACTERS OR WHEN PICTOGRAM SYMBOLS ARE USED, THEY SHALL CONFORM TO THE FOLLOWING: (1117B.5.5)

A) CHARACTERS ON SIGNS SHALL BE RAISED OR RECESSED 1/32 INCH MINIMUM AND SHALL BE SANS - SERIF UPPERCASE CHARACTERS ACCOMPANIED BY GRADE 2 BRAILLE COMPLYING WITH SECTION 1117B.5.6. (1117B.5.5.1)

B) RAISED CHARACTERS OR SYMBOLS SHALL BE A MINIMUM OF 5/8 INCH HIGH AND A MAXIMUM OF 2 INCHES HIGH. (1117B.5.5.2)

C) PICTORIAL SYMBOL SIGNS (PICTOGRAMS) SHALL BE ACCOMPANIED BY THE VERBAL DESCRIPTION PLACED DIRECTLY BELOW THE PICTOGRAM. THE OUTSIDE DIMENSION OF THE PICTOGRAM FIELD SHALL BE A MINIMUM OF 6 INCHES IN HEIGHT. (1117B.5.5.3)

D) CHARACTERS AND BRAILLE SHALL BE IN A HORIZONTAL FORMAT. BRAILLE SHOULD BE PLACED A MINIMUM OF 3/8-INCH AND A MAXIMUM OF ½-INCH DIRECTLY BELOW THE TACTILE CHARACTERS; FLUSH LEFT OR CENTERED. WHEN TACTILE SIGN IS MULTI-LINED, ALL BRAILLE SHALL BE PLACED TOGETHER BELOW ALL LINES OF TACTILE TEXT. (1117B.5.5.4)

6. CHARACTERS ON SIGNS SHALL HAVE A WIDTH-TO-HEIGHT RATIO OF BETWEEN 3:5 AND 1:1 AND A STROKE WIDTH-TO-HEIGHT RATIO BETWEEN 1:5 AND 1:10. (1117B.5.3)

7. CHARACTERS, SYMBOLS AND THEIR BACKGROUND SHALL HAVE A NON-GLARE FINISH. CHARACTERS AND SYMBOLS SHALL CONTRAST WITH THEIR BACKGROUND, EITHER LIGHT CHARACTERS ON A DARK BACKGROUND OR DARK CHARACTERS ON A LIGHT BACKGROUND. (1117B.5.2)

8. CHARACTERS AND NUMBERS ON SIGNS SHALL BE SIZED ACCORDING TO THE VIEWING DISTANCE FROM WHICH THEY ARE TO BE READ. THE MINIMUM HEIGHT IS MEASURED USING AN UPPER CASE "X". LOWER CASE CHARACTERS ARE PERMITTED. FOR SIGNS SUSPENDED OR PROJECTED ABOVE THE FINISH FLOOR IN COMPLIANCE WITH SECTION 1133B.8.6, THE MINIMUM CHARACTER HEIGHT SHALL BE 3 INCHES. (1117B.5.4)

9. CONTRACTED GRADE 2 BRAILLE SHALL BE USED WHEREVER BRAILLE IS REQUIRED IN OTHER PORTIONS OF THESE STANDARDS. DOTS SHALL BE 1/10 INCH ON CENTERS IN EACH CELL WITH 2/10-INCH SPACE BETWEEN CELLS. DOTS SHALL BE RAISED A MINIMUM OF 1/40 INCH ABOVE THE BACKGROUND. (1117B.5.6)

10. POLE SUPPORTED PEDESTRIAN TRAFFIC CONTROL BUTTONS SHALL BE IDENTIFIED WITH COLOR CODING CONSISTING OF A TEXTURED HORIZONTAL YELLOW BAND 2 INCHES IN WIDTH ENCIRCLING THE POLE, AND A 1 INCH WIDE DARK BORDER BAND ABOVE AND BELOW THIS YELLOW BAND. COLOR-CODING SHOULD BE PLACED IMMEDIATELY ABOVE THE CONTROL BUTTON. CONTROL BUTTONS SHALL BE LOCATED NO HIGHER THAN 48 INCHES ABOVE THE SURFACE ADJACENT TO THE POLE. (1117B.5.9)

S. ELECTRICAL

1. THE HIGHEST OPERABLE PART OF ALL CONTROLS, DISPENSERS, RECEPTACLES AND OTHER OPERABLE EQUIPMENT SHALL BE SHALL BE INSTALLED AT AN ACCESSIBLE LOCATION MEETING THE CLEARANCES AND REACH RANGE REQUIREMENTS OF SECTION 1118B.5 AND 1118B.6 AND NOT LESS THAN 15" ABOVE THE FLOOR OR WORKING PLATFORMS. (1117B.6.3)

2. THE CENTER OF THE GRIP OF THE OPERATING HANDLE OF CONTROLS OR SWITCHES INTENDED TO BE USED BY THE OCCUPANT OF THE ROOM OR AREA TO CONTROL LIGHTING AND RECEPTACLE OUTLETS, APPLIANCES, OR COOLING, HEATING, AND VENTILATING EQUIPMENT SHALL BE 48" ABOVE THE FLOOR OR WORKING PLATFORM. (1117B.6, 5.1)

3. THE CENTER OF ELECTRICAL RECEPTACLE OUTLETS ON BRANCH CIRCUITS OF 30 AMPERES OR LESS SHALL BE INSTALLED NOT MORE THAN 48 INCHES NOR LESS THAN 14 INCHES ABOVE THE FLOOR OR WORKING PLATFORM(1117B.6.5.2)

T. NOTIFICATION APPLIANCES FOR THE HEARING IMPAIRED

NOTE: IF EMERGENCY WARNING SYSTEMS ARE PROVIDED, THEY SHALL INCLUDE BOTH AUDIBLE ALARMS AND VISUAL ALARMS COMPLYING WITH NFPA 72 AND CHAPTER 9, SECTIONS 907.9.1 AND 907.9.2. (1114B.2)

1. APPROVED NOTIFICATION APPLIANCES FOR THE HEARING AND VISUALLY IMPAIRED SHALL BE INSTALLED IN ACCORDANCE WITH THE PROVISIONS OF NFPA 72 IN THE FOLLOWING AREAS:

A) RESTROOMS

B) CORRIDORS

C) MUSIC PRACTICE ROOMS

D) BAND ROOMS

T. NOTIFICATION APPLIANCES FOR THE HEARING IMPAIRED

E) GYMNASIUMS

F) MULTIPURPOSE ROOMS (APPLIES)

G) OCCUPATIONAL SHOPS

H) OCCUPIED ROOMS WHERE AMBIENT NOISE IMPAIRS HEARING OF THE FIRE ALARM

I) LOBBIES

J) MEETING ROOMS (APPLIES)

K) ANY OTHER AREA FOR COMMON USE (APPLIES)

U. ADDITIONAL MISCELLANEOUS REQUIREMENTS

1. THE PORTION OF THE RESIDENCE COVERED EXTENDS TO THOSE ELEMENTS USED TO ENTER THE COMMERCIAL FACILITY, INCLUDING THE HOMEOWNER'S FRONT SIDEWALK, IF ANY, THE DOOR OR ENTRY WAY, AND HALLWAYS; AND THOSE PORTIONS OF THE RESIDENCE, INTERIOR OR EXTERIOR, AVAILABLE TO OR TO BE USED BY EMPLOYEES OR VISITORS OF THE COMMERCIAL FACILITY, INCLUDING SANITARY FACILITIES. (1101B.6.2)

PICO BRANCH LIBRARY
2201 Pico Blvd.
Santa Monica, CA 90404

PROJECT

KoningEizenbergArchitecture
1454 25th St, Santa Monica, CA 90404

310.828.6131 info@kearch.com
310.828.0719 fax www.kearch.com

ARCHITECT'S PROJECT NO.
1001

ARCHITECT

All designs, ideas, arrangements and plans indicated by these drawings are the property and copyright of the Architect and shall neither be used on any other work nor be disclosed to any other person for any use whatsoever without written permission.

Koning Eizenberg Architecture and/or its principals and employees waives any and all liability or responsibility for problems that may occur when these plans, drawings, specifications, and/or designs are followed without the professional's guidance with ambiguities, or conflicts which are alleged.

CONSULTANT

City of
Santa Monica
Architecture Services

1437 4TH STREET, SUITE 300
SANTA MONICA, CA 90401
TEL. (310) 458-2205
FAX. (310) 399-1541
architecture@smgov.net

_______________ DATE : ________ 20 __
SUBMITTED BY :

_______________ DATE : ________ 20 __
APPROVED BY :
Miriam Mulder,
Architecture Services Manager

CITY OF SANTA MONICA
DEPARTMENT OF PUBLIC WORKS

REVIEWED BY : DATE : ________ 20 __

REVIEWED BY : DATE : ________ 20 __

REVIEWED BY : DATE : ________ 20 __

CITY CLIENT

NO.	DATE	BY	DESCRIPTION

REVISIONS

ISSUE
65% CONSTRUCTION DOCUMENTS / BID SET

DATE
01/23/2012

DRAWING NO. **6693**

SHEET OF SHEETS

SHEET TITLE
ADA NOTES

SHEET NO.
A0.50

COMMERCIAL ACCESSIBILITY PLAN REVIEW CHECKLIST NO 1.
SANITARY FACILITIES, DRINKING FOUNTAINS, TELEPHONES, ALTERATIONS, AND SINKS

A. SANITARY FACILITIES (GENERAL)

1. BATHING AND TOILET FACILITIES THAT SERVE BUILDINGS, FACILITIES OR PORTIONS OF BUILDINGS OR FACILITIES THAT ARE REQUIRED BY THESE STANDARDS TO BE ACCESSIBLE TO PERSONS WITH DISABILITIES, SHALL BE ON AN ACCESSIBLE ROUTE AND SHALL CONFORM TO THE REQUIREMENTS OF SECTION 1115B. (1115B.1)

2. WHERE SEPARATE FACILITIES ARE PROVIDED FOR PERSONS OF EACH SEX, THESE FACILITIES SHALL BE ACCESSIBLE TO PERSONS WITH DISABILITIES. WHERE UNISEX FACILITIES ARE PROVIDED, THESE FACILITIES SHALL BE ACCESSIBLE TO PERSONS WITH DISABILITIES. (1115B.1.1, FIG 11B-1A)

	A	E	K
TOILET CENTERING FROM WALL	18"	15"*	12"
TOILET SEAT HEIGHT	7"-19"	15"	10"-12"
GRAB BAR HEIGHT (SIDE)	33"	27"*	20"-22"
TOILET PAPER IN FRONT OF TOILET	12" MAX	6" MAX	6" MAX
NAPKIN DISPOSAL IN FRONT OF TOILET	12" MAX	12" MAX	N/A
DISPENSER OR MIRROR HEIGHT	40" MAX	36" MAX	32" MAX
LAVATORY/SINK TOP HEIGHT	34" MAX	29" MAX	24" MAX
LAVATORY/SINK KNEE CLEARANCE	27" MIN	24" MIN	19" MIN
URINAL LIP HEIGHT	17" MAX	15" MAX	13" MIN
URINAL FLUSH HANDLE HEIGHT	44" MAX	37" MAX	32" MAX
DRINKING FOUNTAIN BUBBLER HEIGHT	36" MAX	32" MAX	30" MAX
DRINKING FOUNTAIN KNEE CLEARANCE	27" MIN	24" MIN	22" MIN
RAMP/STAIR HANDRAIL HEIGHT	34"-38"	27"	22"

A = ADULT DIMENSIONS (AGE 12 AND OVER)
E = ELEMENTARY DIMENSIONS
K = KINDERGARTEN AND PRE-SCHOOL DIMENSION.(T1115B-1)

3. WHERE FACILITIES ARE TO BE USED SOLELY BY SMALL CHILDREN, THE SPECIFIC HEIGHTS AND CLEARANCES MAY BE ADJUSTED TO MEET THEIR ACCESSIBILITY NEEDS. SEE TABLE ABOVE FOR SUGGESTED MOUNTING HEIGHTS AND CLEARANCES. (1115B.1.2)

4. THE DIMENSIONS ARE RECOMMENDED BY THE DIVISION OF THE STATE ARCHITECT, OFFICE OF REGULATION SERVICES. THESE RECOMMENDATIONS ARE BASED ON THE FEDERAL "RECOMMENDATIONS FOR ACCESSIBILITY FOR CHILDREN IN ELEMENTARY SCHOOL" AND OTHER RECOGNIZED PUBLICATIONS ON ACCESS FOR CHILDREN.

5. DOORWAYS LEADING TO MEN'S SANITARY FACILITIES SHALL BE IDENTIFIED BY AN EQUILATERAL TRIANGLE 1/4" THICK WITH EDGES 12" LONG AND A VERTEX POINTING UPWARD. WOMEN'S SANITARY FACILITIES SHALL BE IDENTIFIED BY A CIRCLE 1/4" THICK AND 12" IN DIAMETER. (1115B.6)

6. UNISEX SANITARY FACILITIES SHALL BE IDENTIFIED BY A CIRCLE 1/4" THICK, 12" IN DIAMETER, WITH A 1/4" THICK TRIANGLE SUPERIMPOSED ON THE CIRCLE AND WITHIN THE 12" DIAMETER. (1115B.6)

7. GEOMETRIC (CIRCLE & TRIANGLE) SYMBOLS ON SANITARY FACILITY DOORS SHALL BE CENTERED ON THE DOOR AT A HEIGHT OF 60" AND THEIR COLOR AND CONTRAST SHALL BE DISTINCTLY DIFFERENT FROM THE COLOR AND CONTRAST OF THE DOOR. (1115B.6)

NOTE: SEE ALSO SECTION 1117B.5.1 FOR ADDITIONAL SIGNAGE REQUIREMENTS APPLICABLE TO SANITARY FACILITIES.

B. SINGLE ACCOMMODATION SANITARY FACILITIES

NOTE: SINGLE ACCOMMODATION SANITARY FACILITY IS DEFINED AS "A ROOM THAT HAS NOT MORE THAN ONE OF EACH TYPE OF SANITARY FIXTURE, IS INTENDED FOR USE BY ONLY ONE PERSON AT A TIME, HAS NO PARTITION AROUND THE TOILET, AND HAS A DOOR THAT CAN BE LOCKED ON THE INSIDE BY THE ROOM OCCUPANT". (202)

1. SHOW SUFFICIENT SPACE IN THE TOILET ROOM FOR A WHEELCHAIR MEASURING 30" WIDE BY 48" LONG TO ENTER THE ROOM AND PERMIT THE DOOR TO CLOSE. (1115.B.3.2.1)

2. SHOW A CLEAR FLOOR SPACE OF AT LEAST 60" IN DIAMETER, OR A T-SHAPED SPACE COMPLYING WITH FIGURES 11B-12(A) AND (B). NO DOOR SHALL ENCROACH INTO THIS SPACE FOR MORE THAN 12". (1115B.3.2.1, FIG 11B-1A)

3. DOORS SHALL NOT SWING INTO THE CLEAR FLOOR SPACE REQUIRED FOR ANY FIXTURE. (1115B.3.2.2)

4. SHOW THAT THE CENTERLINE OF THE WATER CLOSET FIXTURE SHALL BE 18" FROM THE SIDE WALL OR PARTITION. ON THE OTHER SIDE OF THE WATER CLOSET, PROVIDE A MINIMUM 28" WIDE CLEAR FLOOR SPACE IF THE WATER CLOSET IS ADJACENT TO A FIXTURE OR A MINIMUM OF 32" WIDE CLEAR FLOOR SPACE IF THE WATER CLOSET IS ADJACENT TO A WALL OR PARTITION. THIS CLEAR SPACE SHALL EXTEND FROM THE REAR WALL TO THE FRONT OF THE WATER CLOSET. (1115B.4.1, FIG 11B-1A)

5. ALL DOORS, FIXTURES, AND CONTROLS SHALL BE ON AN ACCESSIBLE ROUTE WITH A MINIMUM CLEAR WIDTH OF 36" EXCEPT AT DOORS. IF A PERSON IN A WHEELCHAIR MUST MAKE A TURN AROUND AN OBSTRUCTION, THE MINIMUM CLEAR WIDTH OF THE ACCESSIBLE ROUTE SHALL BE AS SHOWN IN FIGURE 11B-5E. (1115B.3.2.4)

6. THE ENTRANCE DOOR SHALL CONTAIN A PRIVACY LATCH WHICH COMPLIES WITH SECTION 1117B.6. (1115B.3.2.7)

7. PROVIDE 18 INCHES CLEARANCE ON THE STRIKE SIDE OF THE DOOR. (1115B.3.1)

8. IN EXISTING BUILDINGS, A SINGLE ACCOMMODATION TOILET WATER CLOSET MAY BE LOCATED IN AN AREA WHICH PROVIDES A CLEAR SPACE OF 36"WIDE BY 48 INCHES LONG IN FRONT OF THE WATER CLOSET. (1115B.3.2)

C. MULTIPLE ACCOMMODATION SANITARY FACILITIES

NOTE: MULTIPLE ACCOMMODATION SANITARY FACILITY IS DEFINED AS "A ROOM THAT HAS MORE THAN ONE SANITARY FIXTURE, IS INTENDED FOR THE USE OF MORE THAN ONE PERSON AT A TIME, AND WHICH USUALLY IS PROVIDED WITH PRIVACY COMPARTMENTS OR SCREENS SHIELDING SOME FIXTURES FROM VIEW". (202)

1. SHOW A CLEAR SPACE MEASURED FROM THE FLOOR TO A HEIGHT OF 27" ABOVE THE FLOOR, WITHIN THE SANITARY FACILITY ROOM, OF SUFFICIENT SIZE TO INSCRIBE A CIRCLE WITH A DIAMETER NOT LESS THAN 60". DOORS SHALL NOT SWING INTO THE FLOOR SPACE REQUIRED FOR ANY FIXTURE. OTHER THAN THE DOOR TO THE ACCESSIBLE WATER CLOSET COMPARTMENT, A DOOR, IN ANY POSITION, MAY ENCROACH INTO THIS SPACE BY NOT MORE THAN 12". (1115B.3.1.1 & 1115B3.1.2, FIG 11B-1B)

2. A WATER CLOSET FIXTURE LOCATED IN A COMPARTMENT SHALL PROVIDE A MINIMUM 28" WIDE CLEAR SPACE FROM A FIXTURE OR A MINIMUM 32" WIDE CLEAR SPACE FROM A WALL AT ONE SIDE OF THE WATER CLOSET. THE OTHER SIDE OF THE WATER CLOSET SHALL PROVIDE 18" FROM THE CENTERLINE OF THE WATER CLOSET TO THE WALL. GRAB BARS SHALL NOT PROJECT MORE THAN 3" INTO THESE CLEAR SPACES. THE STALL SHALL BE MINIMUM OF 60" WIDE. (1115B.4.1.1, FIG 11B-1B)

3. IF THE COMPARTMENT HAS A SIDE-OPENING DOOR, SHOW A MINIMUM 60" WIDE AND 60" DEEP CLEAR FLOOR SPACE IN FRONT OF THE WATER CLOSET. (1115B.3.1.4.2)

4. IF THE COMPARTMENT HAS AN END-OPENING DOOR, SHOW A MINIMUM 60" WIDE AND 48" DEEP CLEAR FLOOR SPACE IN FRONT OF THE WATER CLOSET. THE DOOR SHALL BE LOCATED IN FRONT OF THE CLEAR FLOOR SPACE AND DIAGONAL TO THE WATER CLOSET, WITH A MAXIMUM STILE WIDTH OF 4". (1115B.3.1.4.3, FIG 11B-1A & B)

5. NOTE THAT THE WATER CLOSET COMPARTMENT SHALL BE EQUIPPED WITH A DOOR THAT HAS AN AUTOMATIC-CLOSING DEVICE, AND SHALL HAVE A CLEAR, UNOBSTRUCTED OPENING WIDTH OF 32" WHEN LOCATED AT THE END AND 34" WHEN LOCATED AT THE SIDE WITH THE DOOR POSITIONED AT AN ANGLE OF 90 DEGREES FROM ITS CLOSED POSITION. (1115B.3.1.4.4, FIG 11B-1A & B)

6. NOTE THAT THE INSIDE AND OUTSIDE OF THE COMPARTMENT DOOR SHALL BE EQUIPPED WITH A LOOP OR U-SHAPED HANDLE IMMEDIATELY BELOW THE LATCH. THE LATCH SHALL BE FLIP-OVER STYLE, SLIDING, OR OTHER HARDWARE NOT REQUIRING THE USER TO GRASP OR TWIST. (1115B.3.1.4.5)

7. EXCEPT FOR DOOR OPENING WIDTHS AND DOOR SWINGS, SHOW A CLEAR UNOBSTRUCTED ACCESS NOT LESS THAN 44" SHALL BE PROVIDED TO WATER CLOSET COMPARTMENTS DESIGNED FOR USE BY PERSONS WITH DISABILITIES. THE SPACE IMMEDIATELY IN FRONT OF A WATER CLOSET COMPARTMENT SHALL BE NOT LESS THAN 48" AS MEASURED AT RIGHT ANGLES TO COMPARTMENT DOOR IN ITS CLOSED POSITION. (1115B.3.1.4.5, FIG 11B-1B)

8. WHERE SIX OR MORE COMPARTMENTS ARE PROVIDED WITHIN A MULTIPLE ACCOMMODATION TOILET ROOM, IN ADDITION TO THE STANDARD ACCESSIBLE STALL REQUIRED ABOVE, AT LEAST ONE ADDITIONAL AMBULATORY ACCESSIBLE COMPARTMENT SHALL BE 36" WIDE WITH AN OUTWARD SWINGING SELF-CLOSING DOOR AND PARALLEL GRAB BARS COMPLYING WITH SECTIONS 1115B.4.1, ITEM 3. (1115B.3.1.5)

9. PROVIDE AN 18 INCHES CLEARANCE AT THE STRIKE SIDE OF WATER CLOSET COMPARTMENT DOORS (NO EXCEPTION) (1115B.3.1, ITEM 4.4).

D. SANITARY FACILITY FIXTURES & ACCESSORIES

1. SHOW THE HEIGHT OF ACCESSIBLE WATER CLOSETS SHALL BE A MINIMUM OF 17" AND A MAXIMUM OF 19" MEASURED TO THE TOP OF A MAXIMUM 2" HIGH TOILET SEAT, EXCEPT THAT 3" SEATS SHALL BE PERMITTED ONLY IN ALTERATIONS WHERE THE EXISTING FIXTURE IS LESS THAN 15" HIGH. (1115B.4.4)

2. SHOW A CLEAR FLOOR SPACE 30" BY 48" IN FRONT OF A LAVATORY TO ALLOW A FORWARD APPROACH. SUCH CLEAR FLOOR SPACE SHALL ADJOIN OR OVERLAP AN ACCESSIBLE ROUTE AND SHALL EXTEND A MAXIMUM OF 19" INTO KNEE AND TOE SPACE UNDERNEATH THE LAVATORY. A DOOR SWING SHALL NOT ENCROACH INTO THIS CLEAR SPACE. (1115B.4.3.3, 1115B.3.2.2, FIG 11B-1B)

3. SHOW THAT ALL LAVATORIES, WHEN LOCATED ADJACENT TO A SIDE WALL OR PARTITION, SHALL BE A MINIMUM DISTANCE OF 18" TO THE CENTER LINE OF THE FIXTURE. (1115B.4.3.2, FIG 11B-1A)

4. SHOW THAT LAVATORIES THAT ARE DESIGNATED TO BE ACCESSIBLE SHALL BE A MINIMUM 17" IN HORIZONTAL DEPTH AND MOUNTED WITH THE RIM OR COUNTER EDGE NO HIGHER THAN 34" ABOVE THE FINISHED FLOOR AND WITH VERTICAL CLEARANCE MEASURED FROM THE BOTTOM OF THE APRON OR THE OUTSIDE BOTTOM EDGE OF THE LAVATORY OF 29", REDUCING TO 27" AT A POINT LOCATED 8" BACK FROM THE FRONT EDGE. IN ADDITION, A MINIMUM 9" HIGH TOE CLEARANCE MUST BE PROVIDED EXTENDING BACK TOWARD THE WALL TO A DISTANCE NO MORE THAN 6" FROM THE BACK WALL. THE TOE CLEARANCE SPACE MUST BE FREE OF EQUIPMENT OR OBSTRUCTIONS. (1115B.4.3.2, FIG.11B-1D)

5. SHOW THAT HOT WATER AND DRAIN PIPES UNDER ACCESSIBLE LAVATORIES SHALL BE INSULATED OR OTHERWISE COVERED. THERE SHALL BE NO SHARP OR ABRASIVE SURFACES UNDER LAVATORIES. (1115B.4.3.4)

6. WHERE URINALS ARE PROVIDED, AT LEAST ONE SHALL HAVE A CLEAR FLOOR SPACE 30" BY 48" IN FRONT OF THE URINAL TO ALLOW FORWARD APPROACH. (1115B.4.2.3)

7. SHOW THAT URINALS SHALL BE FLOOR MOUNTED, STALL-TYPE OR WALL HUNG. WHERE ONE OR MORE WALL HUNG URINALS ARE PROVIDED, AT LEAST ONE WITH AN ELONGATED RIM PROJECTING A MINIMUM OF 14" FROM THE WALL, A MAXIMUM OF 17" FROM THE WALL, AND A MAXIMUM OF 17" ABOVE THE FLOOR SHALL BE PROVIDED. (1115B.4.2.1)

C. MULTIPLE ACCOMMODATION SANITARY FACILITIES (CONT'D)

8. NOTE THAT CONTROLS FOR WATER CLOSET FLUSH VALVES SHALL BE MOUNTED ON THE WIDE SIDE OF TOILET AREAS. AUTOMATIC SPRING TO LIFTED POSITION SEATS ARE NOT ALLOWED. (1115B.4.1.5, 1115B.4.1.7)

9. NOTE THAT WATER CLOSET AND URINAL FLUSH VALVE CONTROLS, AND FAUCET AND OPERATING MECHANISM CONTROLS, SHALL BE OPERABLE WITH ONE HAND, SHALL NOT REQUIRE TIGHT GRASPING, PINCHING, OR TWISTING OF THE WRIST, AND SHALL BE MOUNTED NO MORE THAN 44" ABOVE THE FLOOR. (1115B.4.1.5, 1115B.4.2.2, 1115B.4.3.1)

10. NOTE THE FORCE REQUIRED TO ACTIVATE WATER CLOSET AND URINAL FLUSH VALVE CONTROLS, AND FAUCET AND OPERATING MECHANISM CONTROLS, SHALL BE NO GREATER THAN 5 LBF. ELECTRONIC OR AUTOMATIC FLUSHING CONTROLS ARE ACCEPTABLE AND PREFERABLE. (1115B.4.1.5, 115B.4.2.2, 1115B.4.3.1)

11. NOTE THAT SELF-CLOSING FAUCET CONTROL VALVES ARE ALLOWED IF THE FAUCET REMAINS OPEN FOR AT LEAST 10 SECONDS. (1115B.4.3.1)

12. SHOW THAT MIRRORS SHALL BE MOUNTED WITH THE BOTTOM EDGE OF THE REFLECTING SURFACE NO HIGHER THAN 40" FROM THE FLOOR. (1115B.8.1)

13. IF MEDICINE CABINETS ARE PROVIDED, AT LEAST ONE SHALL BE LOCATED WITH A USABLE SHELF NO HIGHER THAN 44" ABOVE THE FLOOR. A CLEAR FLOOR SPACE 30" BY 48" COMPLYING WITH SECTION 1118B.4 SHALL BE PROVIDED IN FRONT OF A MEDICINE CABINET TO ALLOW A FORWARD OR PARALLEL APPROACH. (1115B.8.2)

14. WHERE TOWEL, SANITARY NAPKINS, WASTE RECEPTACLES, DISPENSERS, OR OTHER EQUIPMENT AND CONTROLS ARE PROVIDED, SHOW AT LEAST ONE OF EACH TYPE SHALL BE LOCATED ON AN ACCESSIBLE ROUTE, WITH ALL OPERABLE PARTS, INCLUDING COIN SLOTS, WITHIN 40" FROM THE FINISHED FLOOR AND SHALL COMPLY WITH SECTION 1117B.6. (1115B.8.3)

15. SHOW THAT TOILET TISSUE DISPENSERS SHALL BE LOCATED ON THE WALL WITHIN 12" OF THE FRONT EDGE OF THE TOILET SEAT, MOUNTED BELOW THE GRAB BAR AT A MINIMUM HEIGHT OF 19", AND 36" MAXIMUM TO THE FAR EDGE FROM THE REAR WALL. DISPENSERS THAT CONTROL DELIVERY OR THAT DO NOT PERMIT CONTINUOUS PAPER FLOW SHALL NOT BE USED. (1115B.8.4, FIG 11B-1A)

16. SHOW THAT TOILET ROOM FLOORS SHALL HAVE A SMOOTH, HARD, NON-ABSORBENT SURFACE SUCH AS PORTLAND CEMENT, CONCRETE, CERAMIC TILE OR OTHER APPROVED MATERIAL WHICH EXTENDS UPWARD ONTO THE WALLS AT LEAST 5". WALLS WITHIN WATER CLOSET COMPARTMENTS AND WALLS WITHIN 24" OF THE FRONT AND SIDES OF URINALS SHALL BE SIMILARLY FINISHED TO A HEIGHT OF 48" AND, EXCEPT FOR STRUCTURAL ELEMENTS, THE MATERIALS USED IN SUCH WALLS SHALL BE A TYPE WHICH IS NOT ADVERSELY AFFECTED BY MOISTURE. (1115B.3.1.6)

E. GRAB BARS

1. SHOW THAT GRAB BARS FOR WATER CLOSETS NOT LOCATED WITHIN A COMPARTMENT SHALL COMPLY WITH SECTION 1115B.7 AND SHALL BE PROVIDED ON THE SIDE WALL CLOSEST TO THE WATER CLOSED AND ON THE REAR WALL. (1115B.4.1.3)

2. SHOW THAT GRAB BARS FOR WATER CLOSETS LOCATED WITHIN AN ACCESSIBLE COMPARTMENT SHALL COMPLY WITH SECTION 1115B.7 AND SHALL BE PROVIDED ON THE SIDE WALL CLOSEST TO THE WATER CLOSET AND ON THE REAR WALL. (1115B.4.1.3)

3. SHOW THAT GRAB BARS FOR WATER CLOSETS LOCATED WITHIN AMBULATORY ACCESSIBLE COMPARTMENTS SHALL BE PROVIDED ON BOTH SIDES OF THE COMPARTMENT. (1115B.4.1.3)

4. SHOW THAT THE SIDE GRAB BARS SHALL BE 42" LONG MINIMUM, LOCATED 12" MAXIMUM FROM THE REAR WALL, AND EXTEND 54" MINIMUM FROM THE REAR WALL. THE FRONT END SHALL BE POSITIONED 24" MINIMUM IN FRONT OF THE WATER CLOSET, AND SHALL BE SECURELY ATTACHED AND CENTERED 33" ABOVE AND PARALLEL TO THE FLOOR. (1115B.4.1.3.1, FIG 11B 1A & 1B)

5. SHOW THAT THE REAR GRAB BARS SHALL BE 36" LONG MINIMUM AND EXTEND FROM THE CENTERLINE OF THE WATER CLOSET 12" MINIMUM ON ONE SIDE AND 24" MINIMUM ON THE OTHER SIDE. THE REAR GRAB BAR SHALL BE SECURELY ATTACHED AND CENTERED 33" ABOVE AND PARALLEL TO THE FLOOR, EXCEPT THAT WHERE A TANK-TYPE TOILET IS USED, WHICH OBSTRUCTS PLACEMENT AT 33", THE BAR MAY BE AS HIGH AS 36", WITH 1-1/2" MINIMUM BETWEEN THE BAR AND TOP OF TANK. (1115B.4.1.3.2, FIG 11B-1A)

6. SHOW THE DIAMETER OR WIDTH OF THE GRIPPING SURFACES OF A GRAB BAR SHALL BE 1¼" TO 1½" NOMINAL, OR THE SHAPE SHALL PROVIDE AN EQUIVALENT GRIPPING SURFACE. IF GRAB BARS ARE MOUNTED ADJACENT TO A WALL, THE SPACE BETWEEN THE WALL AND THE GRAB BARS SHALL BE 1½". (1115B.7.1, FIG 11B-1C)

7. NOTE THAT THE STRUCTURAL STRENGTH OF GRAB BARS, TUB AND SHOWER SEATS, FASTENERS, AND MOUNTING DEVICES SHALL MEET THE FOLLOWING SPECIFICATIONS: (1115B.7.2)

A) BENDING STRESS IN A GRAB BAR OR SEAT INDUCED BY THE MAXIMUM BENDING MOMENT FROM THE APPLICATION OF A 250-LB POINT LOAD SHALL BE LESS THAN THE ALLOWABLE STRESS FOR THE MATERIAL OF THE GRAB BAR OR SEAT. (1115B.7.2.1)

B) SHEAR STRESS INDUCED IN A GRAB BAR OR SEAT BY THE APPLICATION OF A 250-LB POINT LOAD SHALL BE LESS THAN THE ALLOWABLE SHEAR STRESS FOR THE MATERIAL OF THE GRAB BAR OR SEAT, AND ITS MOUNTING BRACKET OR OTHER SUPPORT IS CONSIDERED TO BE FULLY RESTRAINED, THEN DIRECT AND TORSIONAL SHEAR STRESSES SHALL NOT EXCEED THE ALLOWABLE SHEAR STRESS. (1115B.7.2.2)

C) SHEAR FORCE INDUCED IN FASTENER OR MOUNTING DEVICES FROM THE APPLICATION OF A 250-LB POINT LOAD SHALL BE LESS THAN THE ALLOWABLE LATERAL LOAD OF EITHER THE FASTENER OR MOUNTING DEVICE OR THE SUPPORTING STRUCTURE, WHICHEVER HAS THE SMALLER ALLOWABLE LOAD. (1115B.7.2.3)

D) TENSILE FORCE INDUCED IN A FASTENER BY A DIRECT TENSION FORCE OF A 250-LB POINT LOAD, PLUS THE MAXIMUM MOMENT FROM THE APPLICATION OF A 250-LB POINT LOAD, SHALL BE LESS THAN THE ALLOWABLE WITHDRAWAL LOAD BETWEEN THE FASTENER AND SUPPORTING STRUCTURE. (1115B.7.2.4)

E) GRAB BARS SHALL NOT ROTATE WITHIN THEIR FITTINGS. (1115B.7.2.5)

8. NOTE THAT THE GRAB BAR AND ANY WALL OR OTHER SURFACE ADJACENT TO IT SHALL BE FREE OF ANY SHARP OR ABRASIVE ELEMENTS. EDGES SHALL HAVE A MINIMUM RADIUS OF 1/8". (1115B.7.3)

F. BATHING FACILITIES & LOCKERS

1. WHERE FACILITIES FOR BATHING ARE PROVIDED FOR THE PUBLIC, CLIENTS, OR EMPLOYEES, INCLUDING SHOWERS OR BATHTUBS, AT LEAST ONE SHOWER OR BATHTUB AND SUPPORT FACILITIES, SUCH AS LOCKERS, AND NOT LESS THAN 1% OF ALL FACILITIES SHALL BE MADE ACCESSIBLE. (1115B.2)

2. NOTE THAT SHOWERS IN ALL OCCUPANCIES SHALL BE FINISHED WITH A SMOOTH, HARD, NON-ABSORBENT SURFACE SUCH AS PORTLAND CEMENT, CONCRETE, CERAMIC TILE OR OTHER APPROVED MATERIAL TO A HEIGHT OF NOT LESS THAN 70" ABOVE THE DRAIN INLET. MATERIALS OTHER THAN STRUCTURAL ELEMENTS USED IN SUCH WALLS SHALL BE IF A TYPE WHICH IS NOT ADVERSELY AFFECTED BY MOISTURE. (1115B.2.1)

3. NOTE THAT DOORS AND PANELS OF SHOWER AND BATHTUB ENCLOSURES SHALL BE SUBSTANTIALLY CONSTRUCTED FROM APPROVED, SHATTER-RESISTANT MATERIALS. HINGED SHOWER DOORS SHALL OPEN OUTWARD. (1115B.2.2)

4. NOTE THAT GLAZING USED IN DOORS AND PANELS OF SHOWER AND BATHTUB ENCLOSURES SHALL BE FULLY TEMPERED, LAMINATED SAFETY GLASS, OR APPROVED PLASTIC. WHEN GLASS IS USED, IT SHALL HAVE A MINIMUM THICKNESS OF NOT LESS THAN 1/8" WHEN FULLY TEMPERED, OR 1/4" WHEN LAMINATED, AND SHALL PASS THE TEST REQUIREMENTS OF SECTION 2406. (1115B.2.3)

5. NOTE THAT PLASTIC USED IN DOORS AND PANELS OF SHOWERS AND BATHTUB ENCLOSURES SHALL BE OF SHATTER-RESISTANT TYPE. (1115B.2.4)

6. SHOW A CLEAR FLOOR SPACE WITH MINIMUM DIMENSIONS OF ADJACENT TO BATHTUB. (1115B.4.5.1, FIG 11B-8)

7. PROVIDE AND SHOW AN IN-TUB SEAT OR A SEAT AT THE HEAD END OF BATHTUBS WHICH IS MOUNTED SECURELY, DOES NOT SLIP DURING USE, AND IS DESIGNED, INCLUDING ATTACHMENT, TO MEET THE REQUIREMENTS OF SECTION 1115B.7.2. (1115B.4.5.2, FIG 11B-8 & B-9)

8. PROVIDE AND SHOW GRAB BARS FOR BATHTUBS WHICH COMPLY WITH SECTION 1115B.7. (1115B.4.5.3, FIG 11B-9)

9. SHOW THAT FAUCETS AND OTHER CONTROLS FOR BATHTUBS SHALL BE LOCATED AS SHOWN IN FIGURE 11B-9, SHALL BE OPERABLE WITH ONE HAND, AND SHALL NOT REQUIRE TIGHT GRASPING, PINCHING OR TWISTING OF THE WRIST. THE FORCE REQUIRED TO ACTIVATE CONTROLS SHALL BE NO GREATER THAN 5 POUNDS. (1115B.2.5.4, FIG 11B-9)

10. SHOW THAT BATHTUBS SHALL BE PROVIDED WITH A SHOWER SPRAY UNIT HAVING A HOSE AT LEAST 60" LONG THAT CAN BE USED AS A FIXED SHOWER HEAD OR AS A HANDHELD SHOWER. (1115B.4.5.5)

11. IF PROVIDED, ENCLOSURES FOR BATHTUBS SHALL NOT OBSTRUCT CONTROLS OR TRANSFER FROM WHEELCHAIR ONTO BATHTUB SEATS OR INTO TUBS. ENCLOSURES ON BATHTUBS SHALL NOT HAVE TRACKS MOUNTED ON THEIR RIMS. (1115B.4.5.6)

12. SHOWERS SHALL BE EITHER A) 60" MINIMUM IN WIDTH BETWEEN WALL SURFACES AND 30" MINIMUM IN DEPTH WITH A FULL OPENING WIDTH ON THE LONG SIDE, B) 60" IN WIDTH BETWEEN WALL SURFACES AND 36" IN DEPTH WITH AN ENTRANCE OPENING OF 36" MINIMUM, OR C) 60" MINIMUM IN WIDTH BETWEEN THE WALL SURFACES AND 36" MINIMUM IN DEPTH AS LONG AS THE ENTRANCE OPENING WIDTH IS A MINIMUM 36". (1115B.4.4.1, FIG 11B-2A, 2B & 2D)

13. SHOW THAT THRESHOLDS IN ROLL-IN TYPE SHOWERS SHALL BE A MAXIMUM OF ½" IN HEIGHT AND SHALL BE BEVELED OR SLOPED AT AN ANGLE NOT EXCEEDING 45 DEGREES FROM THE HORIZONTAL. (1115B.4.4.2, 1124B.2)

14. NOTE THAT THE MAXIMUM SLOPE OF THE FLOOR SHALL BE 2% IN ANY DIRECTION. WHERE DRAINS ARE PROVIDED, GRATE OPENINGS SHALL BE A MAXIMUM OF 1/4" AND LOCATED FLUSH WITH THE FLOOR SURFACE. (1115B.4.4.7)

15. WHERE, WITHIN THE SAME FUNCTIONAL AREA, TWO OR MORE ACCESSIBLE SHOWERS ARE PROVIDED, THERE SHALL BE AT LEAST ONE SHOWER CONSTRUCTED OPPOSITE HAND FROM THE OTHER OR OTHERS (I.E., ONE LEFT HAND CONTROL VS. RIGHT HAND CONTROL). (1115B.4.4.3)

16. NOTE THAT WATER CONTROLS SHALL BE OF A SINGLE LEVER DESIGN, OPERABLE WITH ONE HAND, AND SHALL NOT REQUIRE TIGHT GRASPING, PINCHING, OR TWISTING OF THE WRIST. THE CENTERLINE OF THE CONTROLS SHALL BE LOCATED AT 40" ABOVE THE SHOWER FLOOR. THE FORCE REQUIRED TO ACTIVATE CONTROLS SHALL BE NO GREATER THAN 5LBF. (1115B.4.4.4, FIG 11B-2A, 2B, & 2C)

17. PROVIDE AND SHOW A FLEXIBLE HAND-HELD SHOWER UNIT WITH A HOSE AT LEAST 60" LONG THAT CAN BE USED BOTH AS A FIXED SHOWER HEAD AND AS A HAND-HELD SHOWER. THIS UNIT SHALL BE MOUNTED SUCH THAT THE TOP OF THE MOUNTING BRACKET IS AT A MAXIMUM HEIGHT OF 48" ABOVE THE SHOWER FLOOR. (1115B.4.4.5 , FIG 11B-2A, 2B & 2C)

F. BATHING FACILITIES & LOCKERS (CONT'D)

18. SHOW THAT THE CONTROLS AND HAND-HELD SPRAYER UNIT IN A 60" MINIMUM BY 30" MINIMUM ROLL-IN SHOWER SHALL BE LOCATED ON THE BACK WALL OF THE COMPARTMENT ADJACENT TO THE SEAT AND THE CENTERLINE OF THE UNIT AND CONTROLS SHALL BE NO MORE THAN 27" FROM THE SEAT WALL, WITH THE CONTROLS HAVING A MINIMUM OF 19" TO THE SEAT WALL. (1115B.4.4.4.1,1115B.4.4.5.1, FIG 11B-2A)

19. SHOW THAT THE CONTROLS AND HAND-HELD SPRAYER UNIT IN A 60" MINIMUM BY 36" ALTERNATE ROLL-IN SHOWER SHALL BE LOCATED ON THE SIDE WALL OF THE COMPARTMENT ADJACENT TO THE SEAT. THE CENTERLINE OF THE CONTROLS SHALL BE WITHIN A RANGE OF NO LESS THAN 19" AND NO MORE THAN 27" FROM THE SEAT WALL. THE CENTERLINE OF THE SPRAYER UNIT SHALL BE 18" FROM THE SEAT WALL. (1115B.4.4.4.2, 1115B.4.4.5.2, FIG 11B-2B)

20. SHOW THAT THE CONTROLS AND HAND-HELD SPRAYER UNIT IN A 60" MINIMUM BY 36" MINIMUM ALTERNATE ROLL-IN SHOWER WITH OPTIONAL ENCLOSURE SHALL BE LOCATED ON THE BACK WALL OF THE COMPARTMENT ADJACENT TO THE SEAT AND THE CENTERLINE OF THE UNIT AND CONTROLS SHALL BE NO MORE THAN 27" FROM THE SEAT WALL, WITH THE CONTROLS HAVING A MINIMUM OF 19" TO THE SEAT WALL. (1115B.4.4.4.3, 1115B.4.4.5.3, FIG 11B-2C)

21. EXCEPT WITHIN GUEST ROOMS AND SUITES IN HOTELS, MOTELS, AND SIMILAR TRANSIENT LODGING ESTABLISHMENTS, WHERE ACCESSIBLE SHOWER FACILITIES ARE PROVIDED IN AREAS SUBJECT TO EXCESSIVE VANDALISM, IN LIEU OF PROVIDING THE FIXED FLEXIBLE HOSE, TWO WALL MOUNTED SHOWER HEADS SHALL BE INSTALLED. EACH SHOWER HEAD SHALL BE INSTALLED SO THAT IT CAN BE OPERATED INDEPENDENTLY OF THE OTHER AND SHALL HAVE SWIVEL ANGLE ADJUSTMENTS, BOTH VERTICALLY AND HORIZONTALLY. ONE SHOWER HEAD SHALL BE LOCATED AT A HEIGHT OF 48" ABOVE THE FLOOR. (115B.4.4.6)

22. THE FOLLOWING COMPARTMENT SHOWER ACCESSORIES SHALL BE PROVIDED: (1115B.4.4.8)

A) A FOLDING SEAT MOUNTED 18" ABOVE THE FLOOR, AND WITH A MINIMUM SPACE OF 1" AND A MAXIMUM SPACE OF 1-1/2" ALLOWED BETWEEN THE EDGE OF THE SEAT AND ANY WALL. WHEN FOLDED, THE SEAT SHALL NOT EXTEND MORE THAN 6" FROM THE MOUNTING WALL. THE SEAT DIMENSIONS AND MOUNTING POSITION SHALL COMPLY WITH FIGURES 11B-2A, 2B, 2C, AND 2D. THE STRUCTURAL STRENGTH OF SEATS AND THEIR ATTACHMENTS SHALL COMPLY WITH 1115B.7.2. (1115B.4.4.8.1)

B) GRAB BARS LOCATED ON WALLS ADJACENT TO AND OPPOSITE THE SEAT. GRAB BARS SHALL ALSO COMPLY WITH THE DIAMETER, LOADING AND PROJECTION REQUIREMENTS OF SECTION 1115B.7. GRAB BARS SHALL BE MOUNTED BETWEEN A MINIMUM OF 33" AND A MAXIMUM OF 36" ABOVE THE SHOWER FLOOR. (1115B.4.4.8.2, FIG 11B-2A, 2B, & 2C)

C) AN L-SHAPED GRAB BAR MOUNTED ON WALLS OPPOSITE AND ADJACENT TO THE FRONT EDGE OF THE SEAT, BUT NOT EXTENDED TO INCLUDE THAT PORTION OF WALL OVER THE SEAT. (1115B.4.4.8.2, FIG 11B-2A, 2B, & 2C)

D) A SOAP DISH, WHEN PROVIDED, LOCATED ON THE CONTROL WALL AT A MAXIMUM HEIGHT OF 40" ABOVE THE SHOWER FLOOR AND WITHIN REACH LIMITS FROM THE SEAT. (1115B.4.4.9)

23. NOTE THAT ENCLOSURES, WHEN PROVIDED FOR SHOWER STALLS, SHALL NOT OBSTRUCT CONTROLS OR OBSTRUCT TRANSFER FROM WHEELCHAIRS ONTO SHOWER SEATS. (1115B.4.4.10, FIG 11B-2A, 2B, 2C, & 2D)

24. WHERE LOCKERS ARE PROVIDED FOR THE PUBLIC, CLIENTS, EMPLOYEES, MEMBERS, OR PARTICIPANTS, AT LEAST ONE LOCKER AND NOT LESS THAN 1% OF ALL LOCKERS SHALL BE MADE ACCESSIBLE TO PERSONS WITH DISABILITIES. A PATH OF TRAVEL NOT LESS THAN 36" IN CLEAR WIDTH SHALL BE PROVIDED TO THESE LOCKERS. (1115B.8.5)

G. DRINKING FOUNTAINS

1. WHERE ONLY ONE DRINKING FOUNTAIN AREA IS PROVIDED ON A FLOOR, THERE SHALL BE A DRINKING FOUNTAIN WHICH IS ACCESSIBLE TO INDIVIDUALS WHO USE WHEELCHAIRS, AND ONE ACCESSIBLE TO THOSE WHO HAVE DIFFICULTY BENDING OR STOOPING. THIS CAN BE ACCOMMODATED BY THE USE OF "HI-LOW" FOUNTAINS, OR BY SUCH OTHER MEANS AS WOULD ACHIEVE THE REQUIRED ACCESSIBILITY FOR EACH GROUP ON EACH FLOOR. (1115B.4.6.1)

2. WHERE MORE THAN ONE DRINKING FOUNTAIN IS PROVIDED ON A FLOOR, 50% OF THOSE PROVIDED SHALL COMPLY WITH ITEMS 1, 2, 4, AND 5 OF SECTION 1115B.4.6 AND SHALL BE ON AN ACCESSIBLE ROUTE. ALL DRINKING FOUNTAINS SHALL COMPLY WITH 1115B.4.6.3. (1115B.4.6.1)

3. SHOW THAT WALL- AND POST-MOUNTED CANTILEVERED DRINKING FOUNTAINS SHALL BE A MINIMUM OF 18" AND A MAXIMUM OF 19" IN DEPTH AND SHALL HAVE A CLEAR KNEE SPACE BETWEEN THE BOTTOM OF THE APRON AND THE FLOOR OR GROUND NOT LESS THAN 27" IN HEIGHT, 30" IN WIDTH, AND 8" IN DEPTH. THE DEPTH SHALL BE TAKEN FROM THE FRONT EDGE OF THE FOUNTAIN BACK TOWARD THE WALL OR MOUNTING POST. (1115B.4.6.2, FIG 11B-3B)

4. NOTE THAT THE KNEE AND TOE CLEARANCE SPACE SHALL BE FREE OF EQUIPMENT OR OBSTRUCTIONS. (1115B.4.6.2)

5. SHOW A TOE CLEARANCE OF 9" IN HEIGHT ABOVE THE FLOOR, AND 17" IN DEPTH FROM THE FRONT EDGE OF THE FOUNTAIN. (1115B.4.6.2)

6. SHOW A CLEAR FLOOR SPACE AT LEAST 30" BY 48" SHALL BE PROVIDED IN FRONT OF THE DRINKING FOUNTAIN TO ALLOW FORWARD APPROACH. A SIDE APPROACH DRINKING FOUNTAIN IS NOT ACCEPTABLE. (1115B.4.6.2)

7. ALL DRINKING FOUNTAINS SHALL BE LOCATED COMPLETELY WITHIN ALCOVES OR OTHERWISE POSITIONED SO AS NOT TO ENCROACH INTO PEDESTRIAN WAYS. THE ALCOVE IN WHICH THE DRINKING FOUNTAIN IS LOCATED SHALL NOT BE LESS THAN 32" IN WIDTH AND 18" IN DEPTH. PROTRUDING OBJECTS LOCATED IN ALCOVES OR ENCROACHING INTO PEDESTRIAN WAYS ARE PERMITTED TO PROJECT 4" INTO WALKS, HALLS, CORRIDORS, PASSAGEWAYS, OR AISLES. (1115B.4.6.3, FIG 11B-3)

8. SHOW THAT THE DRINKING FOUNTAIN BUBBLER SHALL BE ACTIVATED BY A MANUALLY OPERATED SYSTEM NOT REQUIRING A FORCE GREATER THAN 5 LBF., THAT IS FRONT MOUNTED OR SIDE MOUNTED AND LOCATED WITHIN 6" OF THE FRONT EDGE OF THE FOUNTAIN OR PREFERABLY AN ELECTRONICALLY CONTROLLED DEVICE. (1115B.4.6.4, FIG 11B-3)

9. NOTE THAT THE BUBBLER OUTLET ORIFICE SHALL BE LOCATED WITHIN 6" OF THE FRONT OF THE DRINKING FOUNTAIN AND SHALL BE WITHIN 36" OF THE FLOOR. THE WATER STREAM FROM THE BUBBLER SHALL BE SUBSTANTIALLY PARALLEL TO THE FRONT EDGE OF THE DRINKING FOUNTAIN. (1115B.4.6.4, FIG 11B-3)

10. NOTE THAT THE SPOUT SHALL PROVIDE A FLOW OF WATER AT LEAST 4" HIGH SO AS TO ALLOW THE INSERTION OF A CUP OR GLASS UNDER THE FLOW OF WATER. ON AN ACCESSIBLE DRINKING FOUNTAIN WITH A ROUND OR OVAL BOWL, THE SPOUT MUST BE POSITIONED SO THE FLOW OF WATER IS WITHIN 3" OF THE FRONT EDGE OF THE FOUNTAIN. (1115B.4.6.5)

H. ACCESSIBLE SINKS

1. WHERE PROVIDED, SHOW THAT ACCESSIBLE KITCHEN SINKS AND NONCOMMERCIAL KITCHEN AND COUNTER BAR SINKS SHALL HAVE A CLEAR FLOOR SPACE AT LEAST 30" BY 48" COMPLYING WITH 1118B.4 AND PROVIDING A FORWARD APPROACH. THE CLEAR FLOOR SPACE SHALL BE ON AN ACCESSIBLE ROUTE AND SHALL EXTEND A MAXIMUM OF 19" UNDERNEATH THE SINK. (1115B.4.7, FIG 11B-1D)

2. SHOW THAT EACH ACCESSIBLE SINK SHALL BE A MAXIMUM OF 6-1/2" DEEP. SINKS SHALL BE MOUNTED WITH THE COUNTER OR RIM NO HIGHER THAN 34" ABOVE THE FINISH FLOOR. SHOW KNEE CLEARANCE THAT IS AT LEAST 27" HIGH, 30" WIDE, AND 19" DEEP UNDER SINKS. (1115B.4.7, ITEM 1)

3. NOTE THAT HOT WATER AND DRAIN PIPES EXPOSED UNDER SINKS SHALL BE INSULATED OR OTHERWISE CONFIGURED SO AS TO PROTECT AGAINST CONTACT. THERE SHALL BE NO SHARP OR ABRASIVE SURFACES UNDER SINKS. (1115B.4.7, ITEM 1)

4. NOTE THAT FAUCET CONTROLS AND OPERATING MECHANISMS SHALL BE OPERABLE WITH ONE HAND AND SHALL NOT REQUIRE TIGHT GRASPING, PINCHING, OR TWISTING OF THE WRIST. THE FORCE REQUIRED TO ACTIVATE CONTROLS SHALL BE NOT GREATER THAN 5 LBF. LEVER-OPERATED, PUSH-TYPE, AND ELECTRONICALLY CONTROLLED MECHANISMS ARE EXAMPLES OF ACCEPTABLE DESIGNS. (1115B.4.7, ITEM 1)

5. NOTE THAT SELF-CLOSING FAUCET CONTROL VALVES ARE ALLOWED IF THE FAUCET REMAINS OPEN FOR AT LEAST 10 SECONDS. (1115B.4.7, ITEM 1)

I. PUBLIC TELEPHONES

1. IF PUBLIC TELEPHONES ARE PROVIDED, THEY SHALL BE MADE ACCESSIBLE TO THE EXTENT REQUIRED BY THE FOLLOWING TABLE: (1117B.2.1)

# OF EACH TYPE OF TELEPHONE PROVIDED ON EACH FLOOR	MINIMUM # OF TELEPHONES REQUIRED TO COMPLY WITH 1117B.2*
1 OR MORE SINGLE UNITS	1 OR AT LEAST 50% OF TELEPHONE UNITS PER FLOOR
1 TELEPHONE BANK	1 OR AT LEAST 50% OF TELEPHONE UNITS PER BANK
2 OR MORE BANK	1 OR LEAST 50% OF TELEPHONE UNITS PER BANK ... AT LEAST 1 TELEPHONE PER FLOOR SHALL MEET THE REQUIREMENTS FOR A FORWARD REACH TELEPHONE

* ADDITIONAL PUBLIC TELEPHONES MAY BE INSTALLED AT ANY HEIGHT.

2. SHOW A CLEAR FLOOR OR GROUND SPACE AT LEAST 30" BY 48" THAT ALLOWS EITHER A FORWARD OR PARALLEL APPROACH BY A PERSON USING A WHEELCHAIR SHALL BE PROVIDED AT TELEPHONES. (1117B.2.2, FIG 11B-4)

N/A

3. SHOW THAT BASES, ENCLOSURES, AND FIXED SEATS SHALL NOT IMPEDE APPROACHES TO TELEPHONES BY PEOPLE WHO USE WHEELCHAIRS. (1117B.2.5)

4. SHOW THE HIGHEST OPERABLE PART OF THE TELEPHONE SHALL BE WITHIN 48" OF THE FLOOR IF FORWARD APPROACHED AND 54" IF SIDE APPROACHED. (1117B.2.6, FIG 11B-4)

5. NOTE THAT TELEPHONES MOUNTED DIAGONALLY IN A CORNER THAT REQUIRE WHEELCHAIR USERS TO REACH DIAGONALLY SHALL HAVE THE HIGHEST OPERABLE PART NO HIGHER THAN 54" ABOVE THE FLOOR. (1117B.2.6, FIG 11B-4)

6. NOTE THAT THE CORD FROM THE TELEPHONE TO THE HANDSET SHALL BE AT LEAST 29" LONG. (1117B.2.11)

7. NOTE THAT TELEPHONES SHALL HAVE PUSH-BUTTON CONTROLS WHERE SERVICE

8. IF TELEPHONE ENCLOSURES ARE PROVIDED, THEY SHALL COMPLY WITH THE FOLLOWING: (1117B.2.7)

A) WHERE A PARALLEL APPROACH IS PROVIDED AT A TELEPHONE WITHIN AN ENCLOSURE, THE ENCLOSURE AND COUNTER MAY EXTEND BEYOND THE FACE OF THE TELEPHONE A MAXIMUM OF 10 INCHES. HE ENCLOSURE AND COUNTER MAY NOT OVERLAP THE REQUIRED CLEAR FLOOR OR GROUND SPACE. (1117B.2.7.1, FIG 11B-4)

D. PUBLIC TELEPHONES (CONT'D)

B) WHERE A FRONT APPROACH IS PROVIDED AT A TELEPHONE WITHIN AN ENCLOSURE, THE COUNTER MAY EXTEND BEYOND THE FACE OF THE TELEPHONE A MAXIMUM OF 20 INCHES INTO THE REQUIRED CLEAR FLOOR OR GROUND SPACE AND THE ENCLOSURE MAY EXTEND BEYOND THE FACE OF THE TELEPHONE A MAXIMUM OF 24 INCHES. IF AN ADDITIONAL 6 INCHES IN WIDTH OF CLEAR FLOOR SPACE IS PROVIDED, CREATING A CLEAR FLOOR SPACE OF 36 INCHES BY 48 INCHES, THE ENCLOSURE MAY EXTEND MORE THAN 24 INCHES BEYOND THE FACE OF THE TELEPHONE. (1117B.2.7.3, FIG 11B-4)

C) ENTRANCES TO FULL-HEIGHT ENCLOSURES SHALL BE 30" MINIMUM. (1117B.2.7.2, FIG 11B-4)

D) WHERE TELEPHONE ENCLOSURES PROTRUDE INTO WALLS, HALLS, CORRIDORS, OR AISLES, THEY SHALL COMPLY WITH SECTION 1133B.8.6 (1117B.2.7.4)

9. TELEPHONES SHALL BE EQUIPPED WITH A RECEIVER THAT GENERATES A MAGNETIC FIELD IN THE AREA OF THE RECEIVER CAP. IF BANKS OF PUBLIC TELEPHONES ARE PROVIDED, AT LEAST ONE IN EACH BANK AND A TOTAL OF AT LEAST 25% OF THE TOTAL NUMBER OF PUBLIC TELEPHONES, INCLUDING CLOSED CIRCUIT TELEPHONES IN A BUILDING OR FACILITY, SHALL BE EQUIPPED WITH A VOLUME CONTROL. SUCH TELEPHONES SHALL BE CAPABLE OF A MINIMUM OF 12 DBA AND A MAXIMUM OF 18 DBA ABOVE NORMAL. IF AN AUTOMATIC RESET IS PROVIDED, 18 DBA MAY BE EXCEEDED. PUBLIC TELEPHONES WITH VOLUME CONTROL SHALL BE HEARING AID COMPATIBLE AND SHALL BE IDENTIFIED BY A SIGN CONTAINING A DEPICTION OF A TELEPHONE HANDSET WITH RADIATING SOUND WAVES. (1117B.2.8,FIG 11B-14B)

10. IF A TOTAL OF FOUR OR MORE PUBLIC PAY TELEPHONES ARE PROVIDED AT THE INTERIOR AND EXTERIOR OF A SITE, AND IF AT LEAST ONE OF THE TOTAL IS IN AN INTERIOR LOCATION, THEN AT LEAST ONE INTERIOR PUBLIC TEXT TELEPHONE SHALL BE PROVIDED. (1117B.2.9.1)

11. TEXT TELEPHONES SHALL COMPLY WITH THE FOLLOWING: (1117B.2.9.2)

A) TEXT TELEPHONES USED WITH A PAY TELEPHONE SHALL BE PERMANENTLY AFFIXED WITHIN OR ADJACENT TO THE TELEPHONE ENCLOSURE. IF AN ACOUSTIC COUPLER IS USED, THE TELEPHONE CORD SHALL BE SUFFICIENTLY LONG TO ALLOW CONNECTION OF THE TEXT TELEPHONE AND TELEPHONE RECEIVER. (1117B.2.9.2.1)

B) PAY TELEPHONES DESIGNED TO ACCOMMODATE A PORTABLE TEXT TELEPHONE SHALL BE EQUIPPED WITH A SHELF AND AN ELECTRICAL OUTLET WITHIN OR ADJACENT TO THE TELEPHONE ENCLOSURE. THE TELEPHONE HANDSET SHALL BE CAPABLE OF BEING PLACED FLUSH ON THE SURFACE OF THE SHELF. THE SHELF SHALL BE CAPABLE OF ACCOMMODATING A TEXT TELEPHONE AND SHALL HAVE 6" MINIMUM VERTICAL CLEARANCE IN THE AREA WHERE THE TEXT TELEPHONE IS TO BE PLACED. (1117B.2.9.2.2)

C) EQUIVALENT FACILITATION MAY BE SUBSTITUTED FOR THE ABOVE REQUIREMENTS. (1117B.2.9.2.3)

D) TEXT TELEPHONES SHALL BE IDENTIFIED BY THE INTERNATIONAL TTY SYMBOL (SEE FIGURE 11B-14). IF A FACILITY HAS A PUBLIC TEXT TELEPHONE, DIRECTIONAL SIGNAGE INDICATING THE LOCATION OF THE NEAREST SUCH TELEPHONE SHALL BE PLACED ADJACENT TO ALL BANKS OF TELEPHONES THAT DO NOT CONTAIN A TEXT TELEPHONE. SUCH DIRECTIONAL SIGNAGE SHALL INCLUDE THE INTERNATIONAL TTY SYMBOL. IF A FACILITY HAS NO BANKS OF TELEPHONES, THE DIRECTIONAL SIGNAGE SHALL BE PROVIDED AT THE ENTRANCE OR IN A BUILDING DIRECTORY. (1117B.2.9.3)

12. NOTE THAT IF TELEPHONE BOOKS ARE PROVIDED, THEY SHALL BE LOCATED WITHIN 48" OF THE FLOOR IF FORWARD APPROACHED AND WITHIN 54" IF SIDE APPROACHED. (1117B.2.12)

J. SPECIAL ACCESS (WHEELCHAIR) LIFTS

N/A

NOTE: SPECIAL ACCESS (WHEELCHAIR) LIFTS MAY BE PROVIDED BETWEEN LEVELS, IN LIEU OF PASSENGER ELEVATORS, WHEN THE VERTICAL DISTANCE BETWEEN LANDINGS, STRUCTURAL DESIGN, AND SAFEGUARDS ARE AS ALLOWED BY ASME A18.1, SAFETY STANDARD FOR PLATFORM LIFTS AND STAIRWAY CHAIR LIFTS; THE STATE OF CALIFORNIA, DIVISION OF THE STATE ARCHITECT - ACCESS COMPLIANCE; THE DEPARTMENT OF INDUSTRIAL RELATIONS, DIVISION OF OCCUPATIONAL SAFETY AND HEALTH, AND ANY APPLICABLE SAFETY REGULATIONS OF OTHER ADMINISTRATIVE AUTHORITIES HAVING JURISDICTION.

IF LIFTS ARE PROVIDED, THEY SHALL BE DESIGNED AND CONSTRUCTED TO FACILITATE UNASSISTED ENTRY, OPERATION AND EXIT FROM THE LIFT AND SHALL COMPLY WITH THE RESTRICTIONS AND ENHANCEMENTS OF THIS SECTION IN CONJUNCTION WITH TITLE 8 OF THE CALIFORNIA CODE OF REGULATIONS. (1116B.2)

1. LIFTS MAY BE PROVIDED AS PART OF AN ACCESSIBLE ROUTE ONLY FOR THE FOLLOWING CONDITIONS: (1116B.2)

A) TO PROVIDE AN ACCESSIBLE ROUTE TO A PERFORMING AREA IN AN ASSEMBLY OCCUPANCY, OR TO A SPEAKING AREA OR SIMILAR PLACE (SUCH AS A DAIS OR "HEAD TABLE") IN AN ASSEMBLY OR GROUP B OCCUPANCY. (1116B.2.1)

B) TO COMPLY WITH THE WHEELCHAIR VIEWING POSITION LINE-OF-SIGHT AND DISPERSION REQUIREMENTS OF SECTION 1104B.3.5. (1116B.2.2)

C) TO PROVIDE ACCESS TO INCIDENTAL OCCUPIABLE SPACES AND ROOMS WHICH ARE NOT OPEN TO THE GENERAL PUBLIC AND WHICH HOUSE NO MORE THAN 5 PERSONS, INCLUDING BUT NOT LIMITED TO EQUIPMENT CONTROL ROOMS AND PROJECTION BOOTHS. (1116B.2.3)

D) TO PROVIDE ACCESS WHERE EXISTING SITE CONSTRAINTS OR OTHER CONSTRAINTS MAKE USE OF A RAMP OR AN ELEVATOR INFEASIBLE. (1116B.2.4)

NOTE: SECTIONS 1116B.2.4 EXCEPTION 3 DOES NOT LIMIT THE USE OF A SPECIAL ACCESS (WHEELCHAIR) LIFT TO THE FOUR CONDITIONS LISTED ABOVE WHEN THE LIFT IS BEING INSTALLED AS PART OF AN ACCESSIBLE ROUTE FOR ADDITIONS OR ALTERATIONS.

2. SPECIAL ACCESS LIFTS, WHEN PROVIDED AS A COMPONENT IN AN ACCESSIBLE MEANS OF EGRESS SHALL MEET THE FOLLOWING REQUIREMENTS:

A) THE SPECIAL ACCESS LIFTS ARE PROVIDED WITH STANDBY POWER OR WITH SELF-RECHARGEABLE BATTERY POWER THAT PROVIDES SUFFICIENT POWER TO OPERATE ALL PLATFORM LIFT FUNCTIONS FOR A MINIMUM OF FIVE UPWARD AND DOWNWARD TRIPS. (1116B.3.1)

B) WHEN THE SPECIAL ACCESS LIFT IS PROVIDED PER SECTION 1116B.2.2, THE AREA SERVED BY THE LIFT SHALL NOT SERVE MORE THAN FOUR WHEELCHAIR VIEWING POSITIONS. (1116B.3.2)

3. WHEN THE SPECIAL ACCESS LIFT IS PROVIDED PER SECTION 1116B.2.2, THE BUILDING SHALL HAVE A SUPERVISED AUTOMATIC SPRINKLER SYSTEM. (1116B.3.2.1)

4. WHEN THE SPECIAL ACCESS LIFT IS PROVIDED PER SECTION 1116B.2.2, THE MAXIMUM DISTANCE FROM THE POINT WHERE THE WHEELCHAIR OCCUPANT IS SEATED TO A POINT WHERE THE OCCUPANT HAS A CHOICE OF TWO DIRECTIONS OF TRAVEL TO AN EXIT SHALL NOT EXCEED 30 FEET. THE LENGTH OF THE COMMON PATH OF TRAVEL SHALL INCLUDE THE VERTICAL TRAVEL DISTANCE OF THE LIFT. (1116B.3.2.2)

5. IN NEW CONSTRUCTION, THE MINIMUM SIZE OF LANDINGS SHALL BE 60" BY 60". OTHER DIMENSIONS MAY BE SUBSTITUTED WHERE IT CAN BE DEMONSTRATED THAT A PERSON USING A WHEELCHAIR MEASURING 30" BY 48" CAN ENTER AND OPERATE THE LIFT SAFELY. (1116B.2.4.1)

NOTE: LEVEL AND CLEAR FLOOR AREAS OR LANDINGS AS SPECIFIED IN THIS SECTION SHALL BE PART OF "PATH OF TRAVEL" REQUIREMENTS. (1116B.2.4.2)

6. NOTE THAT LIFTS SHALL HAVE LOW ENERGY POWER-OPERATED DOORS OR GATES. DOORS AND GATES SHALL REMAIN OPEN FOR 20 SECONDS MINIMUM. END DOORS SHALL BE 32" MINIMUM CLEAR WIDTH, AND SIDE DOORS SHALL BE 42" CLEAR WIDTH. (1116B.4)

ACCESSIBILITY NOTES 4

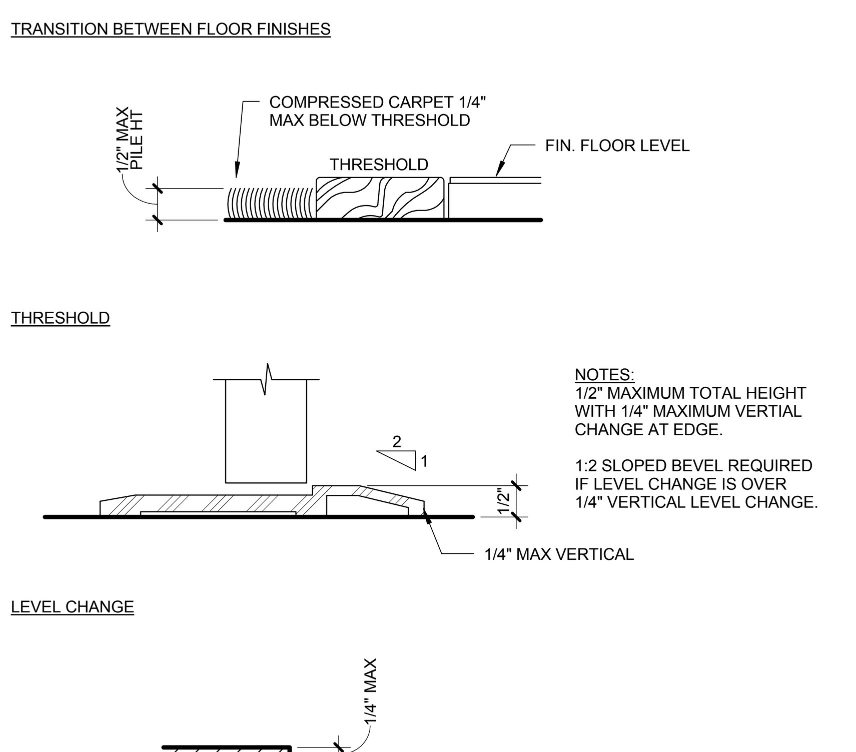

THRESHOLD 3

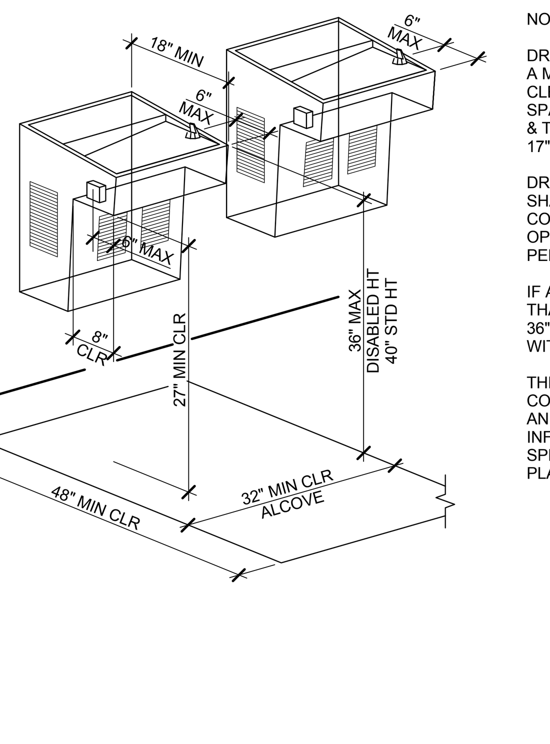

NOTES:

DRINKING FOUNTAINS SHALL BE A MINIMUM OF 18" DEEP WITH A CLEAR UNOBSTRUCTED KNEE SPACE OF 27" HIGH BY 8" DEEP & TOE SPACE OF 9" HIGH BY 17" DEEP.

DRINKING FOUNTAIN BUBBLER SHALL BE ACTIVATED BY A CONTROL WHICH IS EASILY OPERATED BY A DISABLED PERSON

IF ALCOVE DEPTH IS GREATER THAN 24" MIN WIDTH MUST BE 36" (BOTH COOLERS MAY BE WITHIN MIN ALCOVE WIDTH.)

THE DF DELINEATED IS ONLY TO CONVEY MOUNTING HEIGHT AND MIN CLEARANCE INFORMATION SEE SPECIFICATIONS & PLUMBING PLANS FOR SPECIFIC MODEL.

NOT TO SCALE

DRINKING FOUNTAIN 2

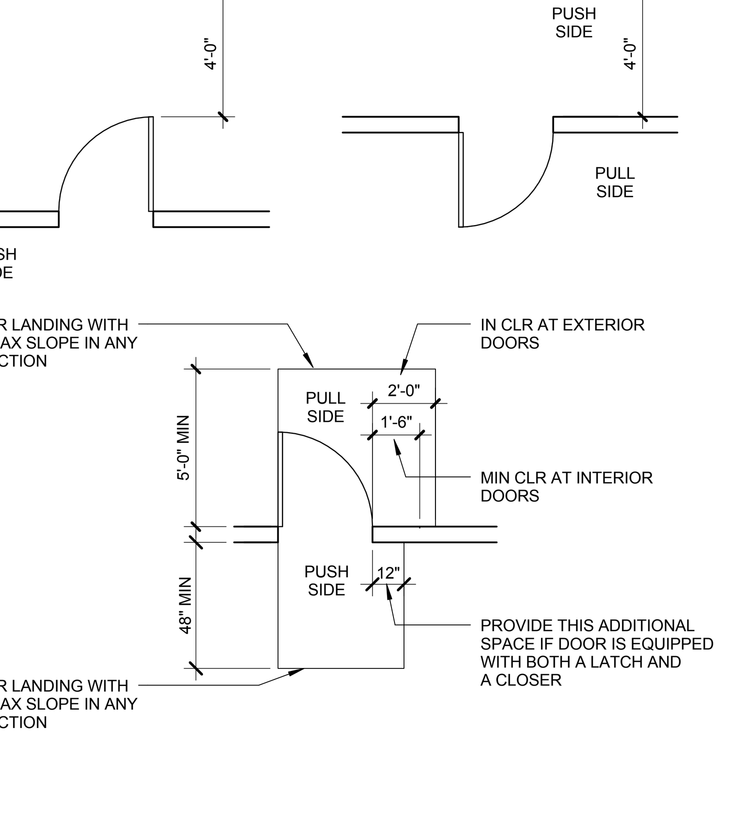

ACCESSIBLE DOORS 0 1' 2' 4' 1/4" = 1'-0" 1

PICO BRANCH LIBRARY
2201 Pico Blvd.
Santa Monica, CA 90404

PROJECT

KoningEizenbergArchitecture
1454 25th St, Santa Monica, CA 90404
310.828.6131 info@kearch.com
310.828.0719 fax www.kearch.com

ARCHITECT'S PROJECT NO.
1001

ARCHITECT

All designs, ideas, arrangements and plans indicated by these drawings are the property and copyright of the Architect and shall neither be used on any other work nor be disclosed to any other person for any use whatsoever without written permission.

Koning Eizenberg Architecture and/or its principals and employees waives any and all liability or responsibility for problems that may occur when these plans, drawings, specifications, and/or designs are followed without the professional's guidance with ambiguities, or conflicts which are alleged.

CONSULTANT

City of Santa Monica
Architecture Services
1437 4TH STREET, SUITE 300
SANTA MONICA, CA 90401
TEL. (310) 458-2205
FAX. (310) 399-1541
architecture@smgov.net

DATE : 20
SUBMITTED BY :

DATE : 20
APPROVED BY :
Miriam Mulder,
Architecture Services Manager
CITY OF SANTA MONICA
DEPARTMENT OF PUBLIC WORKS

REVIEWED BY : DATE : 20

REVIEWED BY : DATE : 20

REVIEWED BY : DATE : 20

CITY CLIENT

NO.	DATE	BY	DESCRIPTION

REVISIONS

ISSUE
65% CONSTRUCTION DOCUMENTS / BID SET
DATE
01/23/2012
DRAWING NO. **6693**
SHEET OF SHEETS
SHEET TITLE
ADA NOTES & DIAGRAMS

SHEET NO.
A0.60

SHEET OF
DWG. NO. : -
TITLE OF PROJECT :

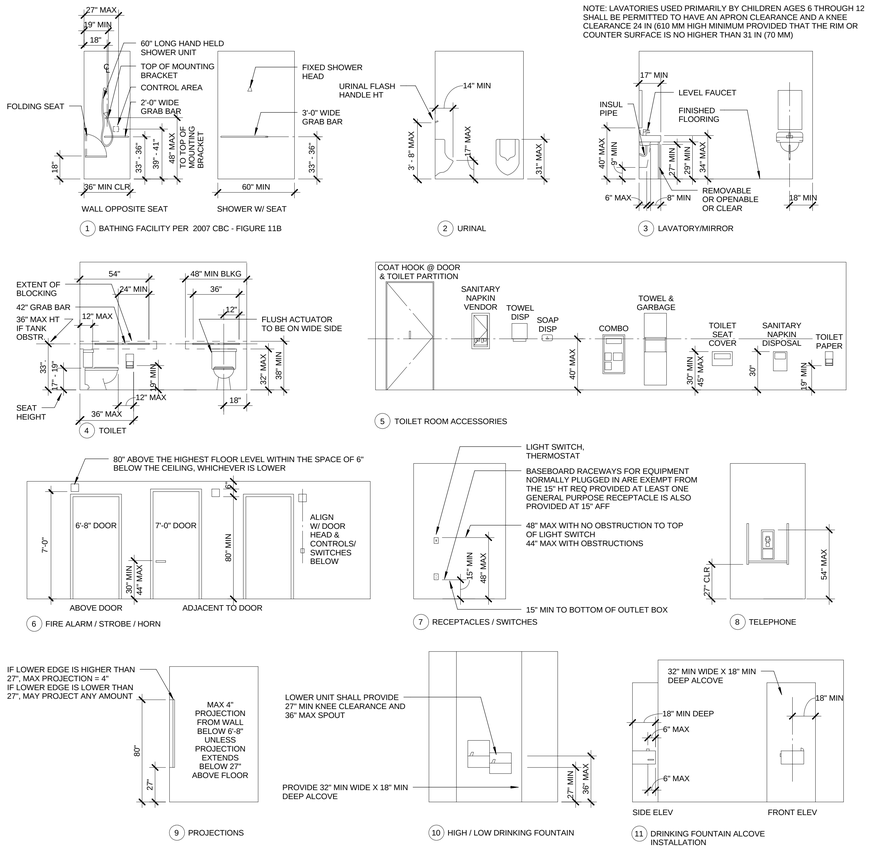

1 BATHING FACILITY PER 2007 CBC - FIGURE 11B

2 URINAL

NOTE: LAVATORIES USED PRIMARILY BY CHILDREN AGES 6 THROUGH 12 SHALL BE PERMITTED TO HAVE AN APRON CLEARANCE AND A KNEE CLEARANCE 24 IN (610 MM HIGH MINIMUM PROVIDED THAT THE RIM OR COUNTER SURFACE IS NO HIGHER THAN 31 IN (70 MM)

3 LAVATORY/MIRROR

4 TOILET

5 TOILET ROOM ACCESSORIES

6 FIRE ALARM / STROBE / HORN

7 RECEPTACLES / SWITCHES

8 TELEPHONE

9 PROJECTIONS

10 HIGH / LOW DRINKING FOUNTAIN

11 DRINKING FOUNTAIN ALCOVE INSTALLATION

ACCESSIBILITY MOUNTING HEIGHTS

0 1' 2' 4' | 1/4" = 1'-0" | 5

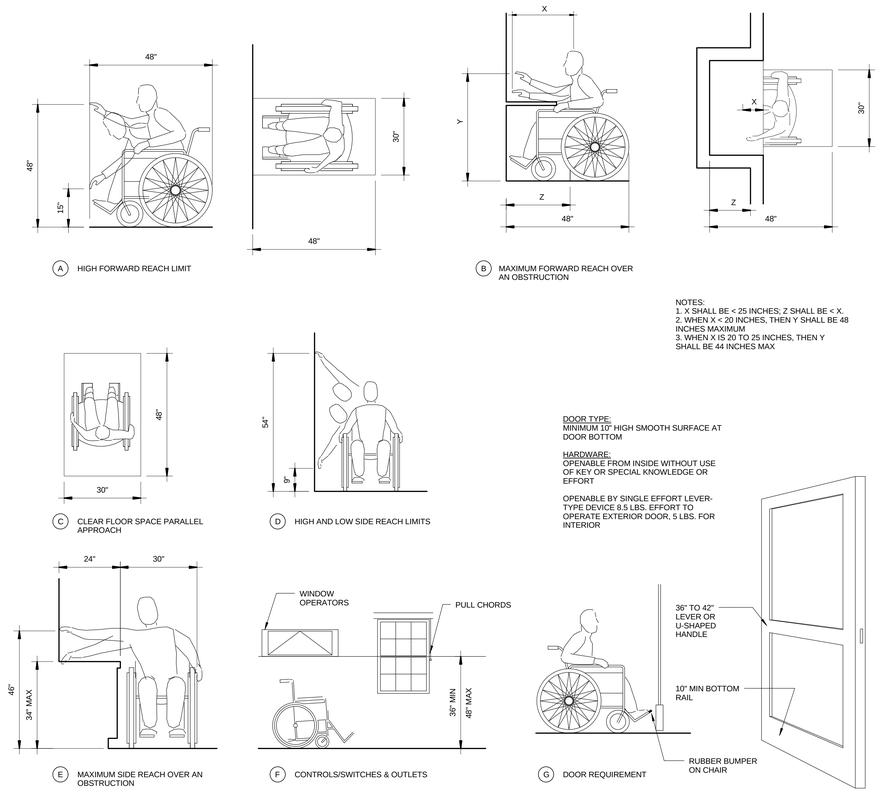

A HIGH FORWARD REACH LIMIT

B MAXIMUM FORWARD REACH OVER AN OBSTRUCTION

NOTES:
1. X SHALL BE < 25 INCHES; Z SHALL BE < X.
2. WHEN X < 20 INCHES, THEN Y SHALL BE 48 INCHES MAXIMUM
3. WHEN X IS 20 TO 25 INCHES, THEN Y SHALL BE 44 INCHES MAX

C CLEAR FLOOR SPACE PARALLEL APPROACH

D HIGH AND LOW SIDE REACH LIMITS

DOOR TYPE:
MINIMUM 10" HIGH SMOOTH SURFACE AT DOOR BOTTOM

HARDWARE:
OPENABLE FROM INSIDE WITHOUT USE OF KEY OR SPECIAL KNOWLEDGE OR EFFORT

OPENABLE BY SINGLE EFFORT LEVER-TYPE DEVICE 8.5 LBS. EFFORT TO OPERATE EXTERIOR DOOR, 5 LBS. FOR INTERIOR

E MAXIMUM SIDE REACH OVER AN OBSTRUCTION

F CONTROLS/SWITCHES & OUTLETS

G DOOR REQUIREMENT

REACH REQUIREMENTS

0 6" 1' 2' | 1/2" = 1'-0" | 2

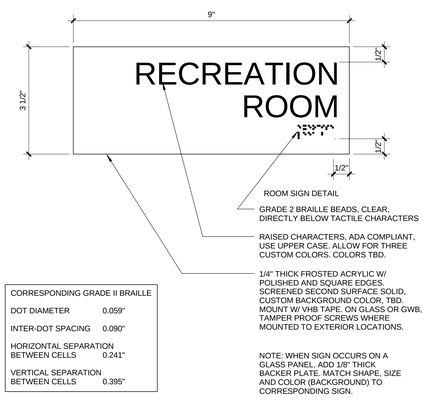

CORRESPONDING GRADE II BRAILLE	
DOT DIAMETER	0.059"
INTER-DOT SPACING	0.090"
HORIZONTAL SEPARATION BETWEEN CELLS	0.241"
VERTICAL SEPARATION BETWEEN CELLS	0.395"

ROOM SIGNAGE | 6

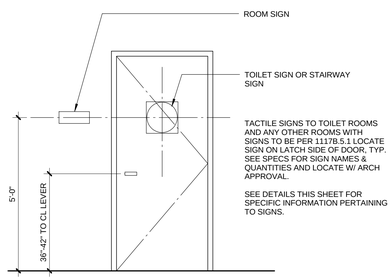

SIGNAGE PLACEMENT

0 6" 1' 2' | 1/2" = 1'-0" | 4

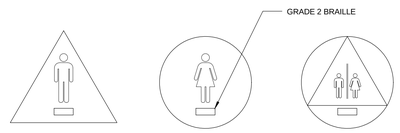

MEN'S (BOY'S) RESTROOM: EQUILATERAL TRIANGLE W/ 12" SIDE AND VERTEX POINTING UP

WOMEN'S (GIRL'S) RESTROOM: 12" DIA CIRCLE

UNISEX RESTROOM: 12" DIA CIRCLE W/ EQUILATERAL TRIANGLE

GENERAL NOTES

1. TEXT, FONT AND CONFIGURATION TO COMPLY W/ LOCAL CODES AND A.D.A
2. EACH PLAQUE 1/4" THICK FROSTED ACRYLIC W/ POLISHED & SQUARE EDGES. SECOND SURFACE SOLID COLOR BACKGROUND. COLOR TB. MOUNT W/ VHB TAPE. FIRST SURFACE VDC SYMBOLS SCOTCHCAL PREMIUM FILM. COLOR TBD.
3. RAISED CHARACTERS SHALL BE RAISED 1/32" MIN. IN SANS SERIF FONT, ACCOMPANIED BY GRADE 2 BRAILLE.
4. SYMBOL TO BE CENTERED ON DOOR AT 60" HEIGHT, COLOR AND CONTRAST TO BE DISTINCTLY DIFFERENT FROM DOOR.
5. SEE ROOM SIGNAGE DETAIL FOR BRAILLE NOTES.
6. SIGNS ARE REQUIRED TO BE MTD. BOTH CENTERED ON THE DOOR INTO THE TOILET AND ON THE WALL ADJACENT TO THE LATCH SIDE OF THE DOOR.

TOILET ROOM SIGNAGE | 3

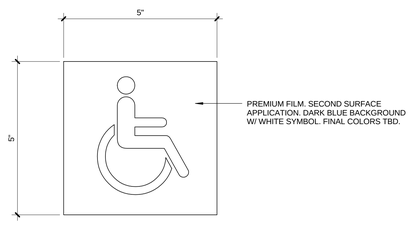

ACCESS SYMBOL | 1

PICO BRANCH LIBRARY

2201 Pico Blvd.
Santa Monica, CA 90404

PROJECT

KoningEizenbergArchitecture
1454 25th St, Santa Monica, CA 90404

310.828.6131 info@kearch.com
310.828.0719 fax www.kearch.com

ARCHITECT'S PROJECT NO.
1001

ARCHITECT

All designs, ideas, arrangements and plans indicated by these drawings are the property and copyright of the Architect and shall neither be used on any other work nor be disclosed to any other person for any use whatsoever without written permission.

Koning Eizenberg Architecture and/or its principals and employees waives any and all liability or responsibility for problems that may occur when these plans, drawings, specifications, and/or designs are followed without the professional's guidance with ambiguities, or conflicts which are alleged.

CONSULTANT

City of Santa Monica Architecture Services

1437 4TH STREET, SUITE 300
SANTA MONICA, CA 90401
TEL. (310) 458-2205
FAX. (310) 399-1541
architecture@smgov.net

DATE : 20
SUBMITTED BY :

DATE : 20
APPROVED BY :
Miriam Mulder,
Architecture Services Manager

CITY OF SANTA MONICA
DEPARTMENT OF PUBLIC WORKS

REVIEWED BY : DATE : 20

REVIEWED BY : DATE : 20

REVIEWED BY : DATE : 20

CITY CLIENT

NO.	DATE	BY	DESCRIPTION

REVISIONS

ISSUE
65% CONSTRUCTION DOCUMENTS / BID SET

DATE
01/23/2012

DRAWING NO. **6693**

SHEET OF SHEETS

SHEET TITLE
ADA DIAGRAMS

SHEET NO.
A0.70

SHEET OF

DWG. NO. -

TITLE OF PROJECT

GENERAL NOTES:

1. WORK SHOWN HEREON SHALL BE DONE IN ACCORDANCE WITH THE "STANDARD SPECIFICATIONS FOR PUBLIC WORKS CONSTRUCTION," LATEST EDITION AND SUPPLEMENTS, THE CALIFORNIA BUILDING CODE (EXCAVATION AND GRADING), AND CITY OF SANTA MONICA LOCAL ORDINANCES AS APPLICABLE.
2. ALL GRADING WORK SHALL BE PERFORMED IN ACCORDANCE WITH THE REQUIREMENTS AND RECOMMENDATIONS CONTAINED IN THE GEOTECHNICAL ENGINEERING SERVICES BY GEO DESIGN, INC. DATED OCTOBER 8, 2010.
3. EXISTING TOPOGRAPHY SHOWN HEREON WAS TAKEN FROM A SURVEY DATED FEBRUARY 8, 2011 BY JMC^2 .
4. THE CONTRACTOR SHALL ASSUME SOLE AND COMPLETE RESPONSIBILITY FOR THE JOB SITE CONDITIONS, INCLUDING SAFETY OF ALL PERSONS AND PROPERTY, DURING THE COURSE OF CONSTRUCTION OF THIS PROJECT. THIS REQUIREMENT SHALL APPLY CONTINUOUSLY, AND SHALL NOT BE LIMITED TO NORMAL WORKING HOURS.
5. PRIOR TO COMMENCING CONSTRUCTION, THE CONTRACTOR SHALL VERIFY ALL JOIN CONDITIONS FOR GRADING, DRAINAGE AND UNDERGROUND FACILITIES INCLUDING LOCATION AND ELEVATION OF EXISTING UNDERGROUND FACILITIES AT CROSSINGS WITH PROPOSED UNDERGROUND FACILITIES. IF CONDITIONS DIFFER FROM THOSE SHOWN ON THE PLANS, THE CONTRACTOR SHALL NOTIFY THE ENGINEER AND SHALL NOT BEGIN CONSTRUCTION UNTIL THE CHANGED CONDITIONS HAVE BEEN EVALUATED.
6. ALL DRAWINGS ARE CONSIDERED TO BE A PART OF THE CONTRACT DOCUMENTS. THE CONTRACTOR SHALL BE RESPONSIBLE FOR THE REVIEW AND COORDINATION OF ALL DRAWINGS AND SPECIFICATIONS PRIOR TO THE START OF CONSTRUCTION. ANY DISCREPANCIES THAT OCCUR SHALL BE BROUGHT TO THE ATTENTION OF THE ARCHITECT PRIOR TO THE START OF CONSTRUCTION SO THAT A CLARIFICATION CAN BE ISSUED. ANY WORK PERFORMED IN CONFLICT WITH THE CONTRACT DOCUMENTS OR ANY CODE REQUIREMENTS SHALL BE CORRECTED BY THE CONTRACTOR AT THEIR OWN EXPENSE AND AT NO EXPENSE TO THE OWNER OR ARCHITECT.
7. THE ENGINEER PREPARING THESE PLANS WILL NOT BE RESPONSIBLE FOR, OR LIABLE FOR, UNAUTHORIZED CHANGES TO OR USES OF THESE PLANS. ALL CHANGES TO THE PLANS MUST BE IN WRITING AND MUST BE APPROVED BY THE PREPARER OF THESE PLANS.
8. NOTES AND DETAILS ON DRAWINGS SHALL TAKE PRECEDENCE OVER GENERAL NOTES AND TYPICAL DETAILS. WHERE NO DETAILS ARE GIVEN, CONSTRUCTION SHALL BE AS SHOWN FOR SIMILAR WORK.
9. THE EXISTENCE, LOCATION AND CHARACTERISTICS OF UNDERGROUND UTILITY INFORMATION SHOWN ON THESE PLANS HAVE BEEN OBTAINED FROM A REVIEW OF AVAILABLE RECORD DATA. NO REPRESENTATION IS MADE AS TO THE ACCURACY OR COMPLETENESS OF SAID UTILITY INFORMATION. THE CONTRACTOR SHALL TAKE PRECAUTIONARY MEASURES TO PROTECT THE UTILITY LINES SHOWN AND ANY OTHER LINES NOT OF RECORD OR NOT SHOWN ON THESE PLANS.
10. IF AT ANY TIME DURING GRADING OPERATIONS, ANY UNFAVORABLE GEOLOGICAL CONDITIONS ARE ENCOUNTERED, GRADING IN THAT AREA WILL STOP UNTIL APPROVED CORRECTIVE MEASURES ARE OBTAINED.
11. THE PROPOSED GRADE IS THE FINAL GRADE AND NOT THE ROUGH GRADE. THE CONTRACTOR SHALL SUBTRACT THE THICKNESS OF THE PAVED SECTION AND/OR LANDSCAPE TOPSOIL SECTION TO ARRIVE AT THE ROUGH GRADE ELEVATION.
12. STRAIGHT GRADE SHALL BE MAINTAINED BETWEEN CONTOUR LINES AND SPOT ELEVATIONS UNLESS OTHERWISE SHOWN ON THE PLANS.
13. ALL DEBRIS AND FOREIGN MATERIAL SHALL BE REMOVED FROM THE SITE AND DISPOSED OF AT APPROVED DISPOSAL SITES. THE CONTRACTOR SHALL OBTAIN NECESSARY PERMITS FOR THE TRANSPORTATION OF MATERIAL TO AND FROM THE SITE.
14. ALL FILL SOILS OR SOILS DISTURBED OR OVEREXCAVATED DURING CONSTRUCTION SHALL BE COMPACTED PER THE REQUIREMENTS OF THE SOILS REPORT BUT NOT LESS THAN 90% MAXIMUM DENSITY AS DETERMINED BY A.S.T.M. SOIL COMPACTION TEST D-1557.
15. THE CONTRACTOR SHALL OBTAIN AN O.S.H.A. PERMIT FROM THE CALIFORNIA DIVISION OF INDUSTRIAL SAFETY PRIOR TO THE CONSTRUCTION OF TRENCHES OR EXCAVATIONS WHICH ARE FIVE FEET OR DEEPER.
16. DIMENSIONS TO PIPELINES ARE TO CENTERLINE UNLESS OTHERWISE NOTED.
17. ALL WATER LINES SHALL BE INSTALLED WITH 36" MINIMUM COVER FROM TOP OF PIPE TO FINISHED GRADE, UNLESS OTHERWISE NOTED.
18. THRUST BLOCKS SHALL BE INSTALLED AT WATERLINE HORIZONTAL AND VERTICAL BENDS, TEES, CAPPED ENDS AND REDUCERS ACCORDING TO THE DETAILS PROVIDED ON THESE PLANS.
19. CONSTRUCTION STAKING FOR IMPROVEMENTS SHOWN ON THESE PLANS SHALL BE PERFORMED BY A LICENSED LAND SURVEYOR.
20. THE CONTRACTOR SHALL REPLACE ALL EXISTING IMPROVEMENTS DAMAGED DURING CONSTRUCTION TO MATCH EXISTING, INCLUDING PERMANENT TRENCH RESURFACING.
21. CONTRACTOR TO CONTACT UNDERGROUND SERVICE ALERT (800-227-2600) PRIOR TO EXCAVATION.
22. ALL DIMENSIONS ARE IN FEET OR DECIMALS THEREOF.
23. ALL CURB DIMENSIONS AND RADII ARE TO PAVEMENT FACE OF CURB.
24. CONTRACTOR TO BE AWARE OF ALL OVERHEAD LINES AT ALL TIMES, SO AS NOT TO DISTURB THEM.
25. WATER SHALL BE PROVIDED ONSITE AND USED TO CONTROL DUST DURING CONSTRUCTION OPERATIONS.
26. CONTRACTOR SHALL OBTAIN ANY NECESSARY PERMITS FROM THE CITY OF SANTA MONICA FOR ALL WORK WITHIN THE PUBLIC RIGHT-OF-WAY.
27. STORM DRAINAGE SYSTEMS SHOWN ON THESE PLANS HAVE BEEN DESIGNED FOR THE FINAL SITE CONDITION AT COMPLETION OF THE PROJECT. THE CONTRACTOR IS RESPONSIBLE FOR MAINTAINING ADEQUATE DRAINAGE OF THE SITE, DURING INTERIM CONDITIONS OF CONSTRUCTION.
28. CONTRACTOR SHALL OBTAIN ALL REQUIRED PERMITS, INCLUDING NPDES, FROM THE APPROPRIATE JURISDICTIONAL AGENCIES FOR DISCHARGE OF GROUNDWATER THAT MAY BE NECESSARY TO ACCOMPLISH EXCAVATIONS SHOWN ON THESE PLANS.

CITY OF SANTA MONICA PUBLIC WORKS GENERAL NOTES:

1. NO WORK SHALL BE DONE WITHIN THE PUBLIC RIGHT OF WAY WITHOUT THE PRIOR APPROVAL AND PERMIT FROM PUBLIC WORKS DEPARTMENT – ADMINISTRATIVE SERVICES, ROOM 113.
2. OWNER IS RESPONSIBLE FOR REPAIR OF ALL DAMAGE TO OFFSITE IMPROVEMENTS CAUSED BY CONSTRUCTION. CALL PUBLIC WORKS INSPECTOR FOR INSPECTION OF OFFSITE IMPROVEMENTS AT SUBSTANTIAL COMPLETION OF ONSITE WORK AT (310) 458-8737.
3. NEW PROPOSED IMPROVEMENTS SHALL NOT OBSTRUCT DRAINAGE OR DRAIN INTO NEIGHBORING PRIVATE PROPERTIES.
4. WATER SHALL BE DRAINED AWAY FROM THE FOUNDATION AND SHALL BE MITIGATED FROM PERMEATING INTO FOUNDATION WALL AND FOOTING OF THE NEW PROPOSED IMPROVEMENTS.
5. NO CONSTRUCTION DEBRIS SHALL BE SPILLED OR STORED ONTO PUBLIC RIGHT-OF-WAY.
6. NO RUNOFF OF SEDIMENT OR WASTES IS ALLOWED IN WATER LEAVING THE SITE.
7. ALL SITE UTILITIES SHALL BE CONSTRUCTED UNDERGROUND TO THE NEAREST OFFSITE UTILITY POLE. CONTRACTOR/DEVELOPER HAS MADE ARRANGEMENTS WITH THE UTILITY COMPANIES TO PLACE ALL OVERHEAD UTILITIES UNDERGROUND.
8. THE CITY STRONGLY URGES THE APPLICANT TO INSPECT THE EXISTING SEWER CONNECTION. IF THE CONNECTION IS DAMAGED OR OVER 30 YEARS OLD, THE CITY RECOMMENDS THAT THE APPLICANT SHOW ON THE PLANS THE CONSTRUCTION OF A NEW 6-INCH DIAMETER VCP SANITARY SEWER CONNECTION FROM PROPERTY LINE TO SANITARY SEWER MAIN IN ACCORDANCE WITH CITY OF SANTA MONICA STANDARDS. (SEWER PERMIT REQUIRED).
9. ALL LABOR, EQUIPMENT AND MATERIAL REQUIRED FOR OFF-SITE IMPROVEMENTS ARE THE RESPONSIBILITY OF THE DEVELOPER.
10. ALL OFFSITE WORK SHALL BE DONE IN ACCORDANCE WITH THE STANDARD SPECIFICATIONS/DRAWINGS FOR PUBLIC WORKS CONSTRUCTION, CURRENT EDITION AS AMENDED BY THE CITY OF SANTA MONICA AND CITY OF SANTA MONICA STANDARDS.
11. OWNER/CONTRACTOR SHALL COMPLY WITH THE UTILITY DIVISION CROSS CONNECTION GUIDELINES. PRIOR TO ISSUANCE OF CERTIFICATE OF OCCUPANCY, CROSS CONNECTION CONTROL INSPECTION MUST BE COMPLETED. CONTACT THE CITY WATER DIVISION AT (310) 458-8531.
12. PRIOR TO INSTALLATION OF ANY CROSS-CONNECTION DEVICE, PLEASE CONTACT THE CITY'S CROSS-CONNECTION INSPECTOR AT (310) 458-8535.
13. PRIOR TO BACKFILLING OR COVERING UP ANY URBAN RUNOFF MITIGATION RELATED EXCAVATIONS AND/OR STRUCTURES, CONTACT THE CITY URBAN RUNOFF COORDINATOR AT (310) 458-8223 FOR INSPECTION.
14. PRIOR TO COMMENCING ANY UNDERGROUND UTILITY WORK, OBTAIN SEPARATE UTILITY EXCAVATION PERMITS AND STREET USE PERMITS FOR UTILITY EXCAVATION. CONTACT PW ADMINISTRATIVE SERVICES, ROOM 113.
15. THE SITE MUST COMPLY WITH SMMC CHAPTER 7.10.060 URBAN RUNOFF POLLUTION ORDINANCE FOR CONSTRUCTION ACTIVITIES AND TEMPORARY BMPS.

TREE PROTECTION ZONE (TPZ) GUIDELINES:

1. TREES WITHIN THE PUBLIC RIGHT-OF-WAY MAY NOT BE REMOVED FOR ANY REASON AND ARE TO BE PROTECTED FROM INJURY OR DAMAGE DURING CONSTRUCTION. THIS TREE IS A SIGNIFICANT TREE IN THE CITY OF SANTA MONICA. PRUNING SHALL ONLY BE DONE BY CITY TREE TRIMMERS TO PROVIDE CLEARANCE FOR CONSTRUCTION ACTIVITIES. ALL QUESTIONS REGARDING STREET TREES ARE TO BE DIRECTED TO THE COMMUNITY FORESTER.
2. THE TYPICAL TPZ SHOULD ENCOMPASS THE CANOPY PLUS AN ADDITIONAL RADIAL WIDTH OF TEN FEET (10'). HOWEVER, SINCE THESE CONDITIONS ARE UNIQUE, THE APPLICATION SHOULD BE EVALUATED WITH THE FINAL LIMITS OF THE TPZ BEING ESTABLISHED BY THE COMMUNITY FORESTER.
3. MULCH THE ENTIRE AREA OF THE TPZ IN AN EFFORT TO IMPROVE THE GROWING ENVIRONMENT FOR THE ROOTS. DURING CONSTRUCTION PHASE MAINTAIN A FOUR TO SIX INCH LAYER OF CHIP MULCH OVER THE SOIL SURFACE TO REDUCE SOIL COMPACTION, IMPROVE AERATION, ENHANCE MOISTURE RETENTION AND REDUCE TEMPERATURE EXTREMES. MULCH GENERALLY CONSISTS OF SHREDDED LEAVES OR BARK, PINE STRAW, PEAT MOSS, WOOD CHIPS OR COMPOSTED GREENWASTE.
4. FENCE THE TPZ WITH SUITABLE FENCING MATERIAL TO PREVENT WOUNDS TO THE TREE AND SOIL COMPACTION WITHIN THE ROOT ZONE. POST THE FENCE WITH A SIGN STATING "TREE PROTECTION ZONE – KEEP OUT".
5. SHOULD IT BE NECESSARY TO TRENCH WITHIN THE TPZ ALL TRENCHES SHALL BE HAND DUG. NO ROOTS LARGER THAN TWO INCHES (2") SHALL BE CUT UNLESS NO OTHER ALTERNATIVE IS FEASIBLE. ALL SMALLER ROOTS THAT REQUIRE CUTTING SHALL BE CUT WITH PRUNING SAWS. CUTS SHALL BE MADE FLUSH WITH THE SIDE OF THE TRENCH. IF AT ANY TIME TWENTY-FIVE PERCENT (25%) OF THE AREA WITHIN THE TPZ IS BEING SEPARATED FROM THE TREE BY A TRENCH, THEN THE LINE SHALL BE EITHER RELOCATED OF INSTALLED BY BORING.
6. REMOVAL OF HARDSCAPE MATERIALS FROM WITHIN THE TPZ SHALL BE DONE MANUALLY.
7. THE MINIMUM DISTANCE BETWEEN AN OPEN TRENCH AND ANY THREE SHALL BE BETWEEN SIX INCHES (6") TO ONE FOOT (1') FOR EVERY INCH OF TRUNK DIAMETER MEASURED AT FOUR AND A HALF FEET (4 ½') ABOVE EXISTING GRADE, DEPENDING ON THE SPECIES OF TREE. MINIMUM CLEARANCE SHALL BE TEN FEET (10') FROM THE TRUNK OF THE TREE.
8. IN THE EVENT ROOT PRUNING IS REQUIRED TO ACCOMMODATE GRADE CHANGES OR THE INSTALLATION OF HARDSCAPE FEATURES THE ROOT PRUNING PROCEDURES DESCRIBED IN THIS OUTLINE SHOULD BE FOLLOWED.
9. AT NO TIME SHALL ANY EQUIPMENT, MATERIALS, SUPPLIES OR FILL SOIL BE ALLOWED IN THE TPZ.
10. PRUNE AND FERTILIZE THE TREES AFTER THE COMPLETION OF ALL EXTERIOR WORK ON THE BUILDING AND AT THE BEGINNING OF THE LANDSCAPE PHASE.
11. CALL THE COMMUNITY FORESTERS OFFICE TO SET A SITE VISIT TO DETERMINE THE EXACT LOCATION OF THE TPZ FENCE BEFORE START OF WORK. (310) 458-8974.
12. ALL QUESTIONS REGARDING THE CITY TREE ADJACENT TO YOUR PROJECT MAY BE DIRECTED TO THE COMMUNITY FORESTER, WALT WARRINER AT (310) 458-8974.

LEGEND:

GENERAL

CIVIL LIMITS OF WORK

ANNOTATION

Symbol	Description
100.00 XX	SURFACE ELEVATION/UTILITY ELEVATION
(100.00 XX)	EXISTING SURFACE ELEVATION/UTILITY ELEVATION
XX	CONSTRUCTION NOTE
2.0%	FLOW (DIRECTION AND GRADE)
2:1	SLOPE (DIRECTION AND RUN:RISE)
XX	HORIZONTAL CONTROL POINT LABEL
CX	CURVE DATA LABEL
FF=100.00	PAD/FINISHED FLOOR ELEVATION

SITE

CURB/BACK OF CURB/GUTTER
RETAINING WALL/SITE WALL
FOUNTAIN
PROPERTY LINE/RIGHT OF WAY
CENTER LINE
FENCE
TO BE DEMOLISHED

EROSION CONTROL

SANDBAGS
EXISTING DRAINAGE DIRECTION OF FLOW

GRADING

Symbol	Description
100	PROPOSED MAJOR CONTOUR
102	PROPOSED MINOR CONTOUR
	FLOW LINE
GB	GRADE BREAK LINE
R	RIDGE LINE

UTILITY

Symbol	Description
SD	STORM DRAIN
	PERFORATED PIPE
	CAP OR PLUG
	UTILITY CLEANOUT
	STORM DRAIN INLET
	AREA DRAIN/PLANTER DRAIN
	TRENCH DRAIN

ABBREVIATIONS:

AC	ASPHALTIC CONCRETE	(N)	NORTH
BW	BACK OF WALK	NTS	NOT TO SCALE
BLDG	BUILDING	PA	PLANTER AREA
BM	BENCH MARK	POC	POINT OF CONNECTION
BOS	BOTTOM OF STAIRS	PIV	POST INDICATOR VALVE
BMP	BEST MANAGEMENT PRACTICES	PCC	PORTLAND CEMENT CONCRETE
CB	CATCH BASIN	PRV	PRESSURE REDUCING VALVE
CI	CAST IRON	PVC	POLYVINYL CHLORIDE
CL	CENTER LINE	R	RADIUS
CMU	CONCRETE MASONRY UNIT	RCIP	RECTANGULAR CAST IRON PIPE
CO	CLEANOUT	RD	ROOF DRAIN
CONC	CONCRETE	RW	RIGHT-OF-WAY
CF	CURB FACE	(S)	SOUTH
DW	DOMESTIC WATER	S=	SLOPE EQUALS
(E)	EAST	SD	STORM DRAIN
EG	EDGE OF GUTTER	SSMH	SANITARY SEWER MANHOLE
EL. OR ELEV	ELEVATION	SS	SANITARY SEWER
ELEC	ELECTRIC, ELECTRICAL	STD	STANDARD
EX. OR EXIST.	EXISTING	SDMH	STORM DRAIN MANHOLE
FDC	FIRE DEPARTMENT CONNECTION	TC	TOP OF CURB
FF	FINISHED FLOOR	TEL	TELEPHONE
FG	FINISHED GRADE (LANDSCAPE)	TG	TOP OF GRATE
FS	FINISHED SURFACE (HARDSCAPE)	TOS	TOP OF STAIRS
FH	FIRE HYDRANT	TPZ	TREE PROTECTION ZONE
FL	FLOW LINE	TW	TOP OF WALL
FT	FOOT OR FEET	TS	TRAFFIC SIGNAL
FU	FIXTURE UNITS	TSB	TRAFFIC SIGNAL BOX
FV	GATE VALVE	TYP	TYPICAL
FW	FIRE WATER	TV	TELEVISION
GPM	GALLONS PER MINUTE	VIF	VERIFY IN FIELD
HDPE	HIGH DENSITY POLYETHEYNE	VLT	VAULT
HP	HIGH POINT	VCP	VITRIFIED CLAY PIPE
INV.	INVERT	(W)	WEST
LP	LOW POINT	W	WATER
MAX.	MAXIMUM	WM	WATER METER
MIN.	MINIMUM	WV	WATER VALVE
MH	MANHOLE		

SHEET INDEX:

CIVIL DRAWINGS

C0.10	TITLE SHEET
C1.00	EROSION CONTROL PLAN
C1.10	DEMOLITION PLAN
C1.20	GRADING AND DRAINAGE PLAN
C1.21	GRADING AND DRAINAGE PLAN
C1.30	HORIZONTAL CONTROL AND PAVING PLAN
C1.40	UTILITY PLAN
C5.00	CIVIL DETAILS
C5.01	CIVIL DETAILS

ESTIMATED EARTHWORK QUANTITIES

CUT:	540 CUBIC YARDS
FILL:	395 CUBIC YARDS
NET CUT:	145 CUBIC YARDS

NOTES:
1. THE ESTIMATED QUANTITIES PROVIDED ABOVE ARE TO BE USED FOR JURISDICTIONAL PLAN CHECKING AND PERMITTING PURPOSES ONLY.
2. ESTIMATED EARTHWORK ABOVE IS BASED ON DESIGN FINISH GRADES TO EXISTING GRADES AND/OR CONTOURS AS PROVIDED ON THE BASE SURVEY. THE ESTIMATED EARTHWORK DOES NOT ACCOUNT FOR THE THICKNESS OF PAVEMENTS, FOUNDATIONS AND SLABS ON GRADE, FOOTINGS, CLEARING AND GRUBBING, OVER EXCAVATION AND RECOMPACTION, AND CONSTRUCTION MEANS AND METHODS.
3. THE ESTIMATED EARTHWORK QUANTITIES DO NOT INCLUDE SHRINKAGE AND/OR EXPANSION FACTORS DUE TO COMPACTION OR OVER EXCAVATION QUANTITIES.
4. THE CONTRACTOR SHALL CALCULATE HIS OWN EARTHWORK QUANTITIES NECESSARY FOR HIS BID AND WORK.
5. ESTIMATED EARTHWORK QUANTITIES ABOVE ASSUME THAT ALL ONSITE MATERIALS ARE SUITABLE FOR BACKFILLING. HOWEVER, ACTUAL EXISTING ONSITE MATERIALS AND IMPORTED MATERIALS MUST FIRST BE APPROVED BY THE GEOTECHNICAL ENGINEER PRIOR TO INSTALLATION, REMOVAL, OR REPLACEMENT.
6. THE ESTIMATED QUANTITIES PROVIDED ABOVE INCLUDE EXCAVATION FOR THE PROPOSED POOL AND SPA

1-800-227-2600
CALL USA/SC FOR UNDERGROUND LOCATING 48 HOURS BEFORE YOU DIG!

IMPORTANT NOTICE
SECTION 4216/4217 OF THE GOVERNMENT CODE REQUIRES A DIGALERT IDENTIFICATION NUMBER BE ISSUED BEFORE A "PERMIT TO EXCAVATE" WILL BE VALID. FOR YOUR DIGALERT I.D. NUMBER CALL UNDERGROUND SERVICE ALERT TOLL FREE 1-800-227-2600 TWO WORKING DAYS BEFORE YOU DIG

THIS PLAN HAS BEEN REVIEWED AND CONFORMS TO RECOMMENDATIONS OF SOILS ENGINEERING/GEOLOGICAL REPORT BY GEO DESIGN, INC. DATED OCTOBER 8, 2010. THE GEOTECHNICAL ENGINEER HAS REVIEWED AND APPROVED THE URBAN RUN-OFF MITIGATION SYSTEM, INCLUDING CONFIRMING ADEQUATE PERCOLATION.

SIGNATURE ____________ DATE ________ STAMP

PROJECT SITE

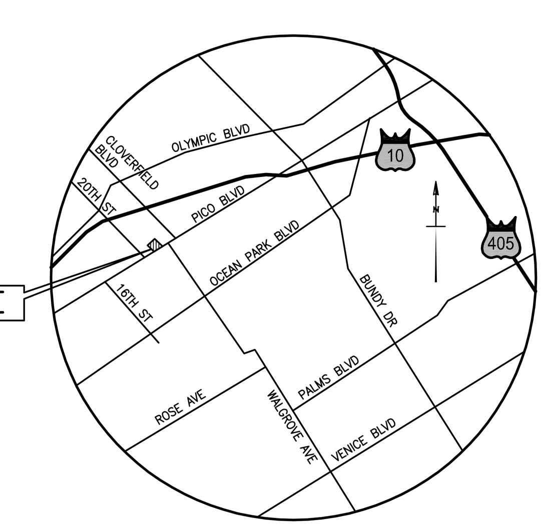

VICINITY MAP
NOT TO SCALE
THOMAS GUIDE LOS ANGELES EDITION
PAGE: 671 GRID: H1

PICO BRANCH LIBRARY
2201 Pico Blvd.
Santa Monica, CA 90404

PROJECT

KoningEizenbergArchitecture
1454 25th St, Santa Monica, CA 90404
310.828.6131 info@kearch.com
310.828.0719 fax www.kearch.com

ARCHITECT'S PROJECT NO.
1001

ARCHITECT

All designs, ideas, arrangements and plans indicated by these drawings are the property and copyright of the Architect and shall neither be used on any other work nor be disclosed to any other person for any use whatsoever without written permission.

Koning Eizenberg Architecture and/or its principals and employees waives any and all liability or responsibility for problems that may occur when these plans, drawings, specifications, and/or designs are followed without the professional's guidance with ambiguities, or conflicts which are alleged.

kpff Consulting Engineers
6080 Center Dr. Suite 700
Los Angeles, California 90045
(310) 665-2800 Fax (310) 665-9075

CONSULTANT

City of Santa Monica Architecture Services
1437 4TH STREET, SUITE 300
SANTA MONICA, CA 90401
TEL. (310) 458-2205
FAX. (310) 399-1541
architecture@smgov.net

________ DATE : ________ 20 __
SUBMITTED BY :

________ DATE : ________ 20 __
APPROVED BY :
Miriam Mulder,
Architecture Services Manager

CITY OF SANTA MONICA
DEPARTMENT OF PUBLIC WORKS

REVIEWED BY : DATE : ________ 20 __

REVIEWED BY : DATE : ________ 20 __

REVIEWED BY : DATE : ________ 20 __

CITY CLIENT

NO.	DATE	BY	DESCRIPTION

REVISIONS

ISSUE
65% CONSTRUCTION DOCUMENTS / BID SET

DATE
01/23/2012

DRAWING NO. **6693**

SHEET OF SHEETS

SHEET TITLE
Title Sheet

SHEET NO.
C0.10

SHEET OF

DWG. NO.: -

TITLE OF PROJECT : P:\2009\109294 Pico Branch Library, Santa Monica\DWG\SHEET\109294C-0.10GN.dwg, Jan 20, 2012 - 2:00pm

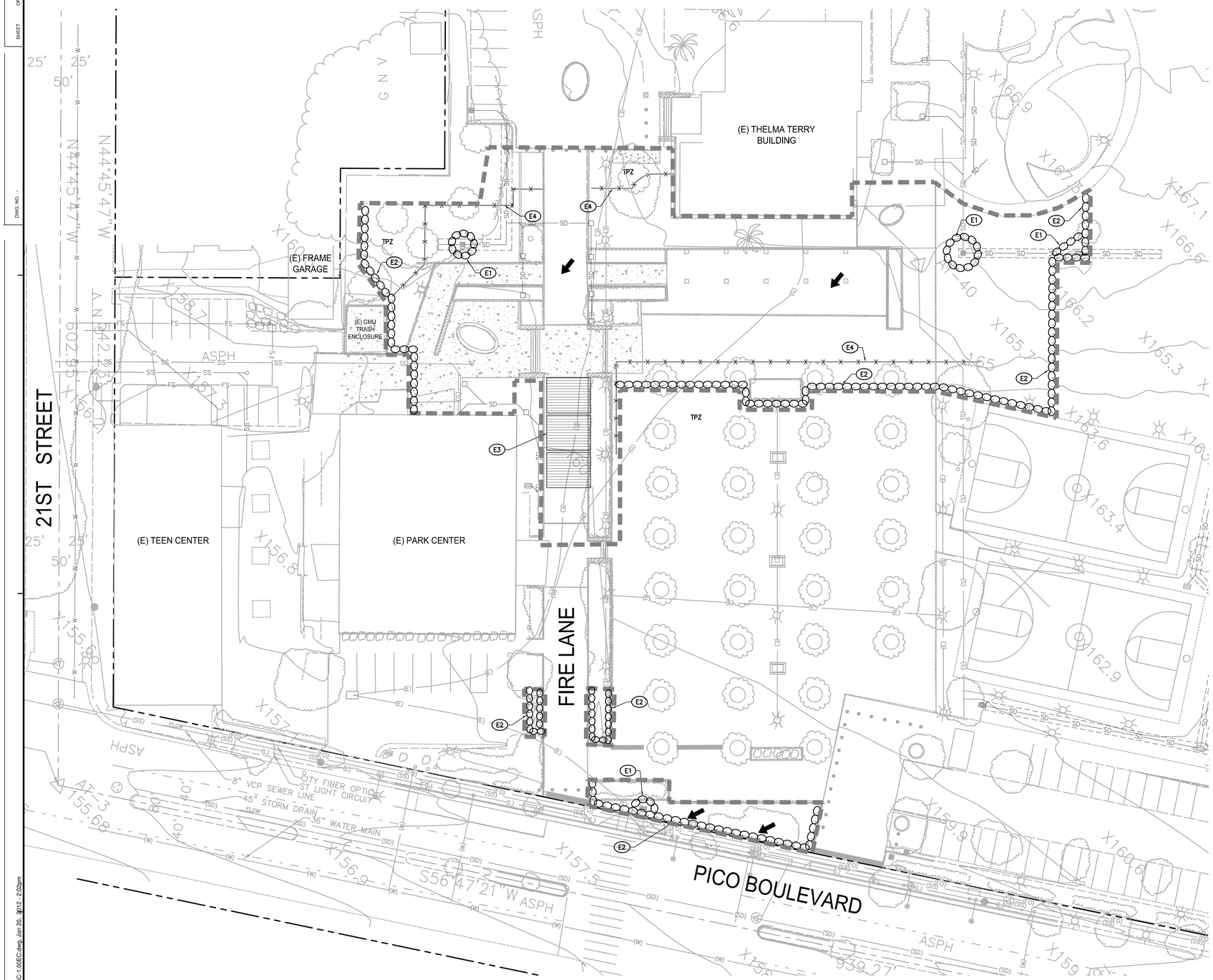

BMP NOTES:

THE FOLLOWING BMPS AS OUTLINED IN, BUT NOT LIMITED TO, THE BEST MANAGEMENT PRACTICE HANDBOOK, CALIFORNIA STORMWATER QUALITY TASK FORCE, SACRAMENTO, CALIFORNIA, NOVEMBER 2009, MAY APPLY DURING THE CONSTRUCTION OF THIS PROJECT (ADDITIONAL MEASURES MAY BE REQUIRED IF DEEMED APPROPRIATE BY CITY INSPECTORS):

EROSION CONTROL

EC1–SCHEDULING
EC2–PRESERVATION OF EXISTING VEGETATION
EC3–HYDRAULIC MULCH
EC4–HYDROSEEDING
EC5–SOIL BINDERS
EC6–STRAW MULCH
EC7–GEOTEXTILES AND MATS
EC8–WOOD MULCHING
EC9–EARTH DIKES AND DRAINAGE SWALES
EC10–VELOCITY DISSIPATION DEVICES
EC11–SLOPE DRAINS
EC12–STREAMBANK STABILIZATION
EC13–RESERVED
EC14–COMPOST BLANKET
EC15–SOIL PREPARATION/ROUGHENING
EC16–NON–VEGETATIVE STABILIZATION

TEMPORARY SEDIMENT CONTROL

SE1–SILT FENCE
SE2–SEDIMENT BASIN
SE3–SEDIMENT TRAP
SE4–CHECK DAM
SE5–FIBER ROLLS
SE6–GRAVEL BAG BERM
SE7–STREET SWEEPING AND VACUUMING
SE8–SANDBAG BARRIER
SE9–STRAW BALE BARRIER
SE10–STORM DRAIN INLET PROTECTION
SE11–ACTIVE TREATMENT SYSTEMS
SE12–TEMPORARY SILT DIKE
SE13–COMPOST SOCKS AND BERMS
SE14–BIOFILTER BAGS

EQUIPMENT TRACKING CONTROL

TC1–STABILIZED CONSTRUCTION ENTRANCE/EXIT
TC2–STABILIZED CONSTRUCTION ROADWAY
TC3–ENTRANCE/OUTLET TIRE WASH

WIND EROSION CONTROL

WE1–WIND EROSION CONTROL

NON–STORMWATER MANAGEMENT

NS1–WATER CONSERVATION PRACTICES
NS2–DEWATERING OPERATIONS
NS3–PAVING AND GRINDING OPERATIONS
NS4–TEMPORARY STREAM CROSSING
NS5–CLEAR WATER DIVERSION
NS6–ILLICIT CONNECTION/DISCHARGE
NS7–POTABLE WATER/IRRIGATION
NS8–VEHICLE AND EQUIPMENT CLEANING
NS9–VEHICLE AND EQUIPMENT FUELING
NS10–VEHICLE AND EQUIPMENT MAINTENANCE
NS11–PILE DRIVING OPERATIONS
NS12–CONCRETE CURING
NS13–CONCRETE FINISHING
NS14–MATERIAL AND EQUIPMENT USE
NS15–DEMOLITION ADJACENT TO WATER
NS16–TEMPORARY BATCH PLANTS

WASTE MANAGEMENT & MATERIALS POLLUTION CONTROL

WM1–MATERIAL DELIVERY AND STORAGE
WM2–MATERIAL USE
WM3–STOCKPILE MANAGEMENT
WM4–SPILL PREVENTION AND CONTROL
WM5–SOLID WASTE MANAGEMENT
WM6–HAZARDOUS WASTE MANAGEMENT
WM7–CONTAMINATED SOIL MANAGEMENT
WM8–CONCRETE WASTE MANAGEMENT
WM9–SANITARY/SEPTIC WASTE MANAGEMENT
WM10–LIQUID WASTE MANAGEMENT

EROSION CONTROL NOTES:

1. TEMPORARY EROSION CONTROL DEVICES SHOWN ON THE GRADING PLAN WHICH INTERFERE WITH THE WORK SHALL BE RELOCATED OR MODIFIED AS AND WHEN THE INSPECTOR SO DIRECTS AS THE WORK PROGRESSES TO MEET "AS GRADED" CONDITIONS.
2. ALL LOOSE SOIL AND DEBRIS SHALL BE REMOVED FROM THE STREET AREAS UPON STARTING OPERATIONS AND PERIODICALLY THEREAFTER AS DIRECTED BY THE INSPECTOR
3. WHEN THE INSPECTOR SO DIRECTS, A 12–INCH BERM SHALL BE MAINTAINED ALONG THE TOP OF THE SLOPE OF THOSE FILLS ON WHICH GRADING IS NOT IN PROGRESS.
4. STORM AND SEWER DRAIN TRENCHES THAT ARE CUT THROUGH BASIN DIKES OR BASIN INLET DIKES SHALL BE PLUGGED WITH SANDBAGS.
5. EXCEPT WHEN THE INSPECTOR DIRECTS OTHERWISE, ALL DEVICES SHOWN SHALL BE IN PLACE AT THE END OF EACH WORKING DAY WHEN RAIN IS FORECAST, AND SHALL BE MAINTAINED DURING THE RAINY SEASON (OCTOBER 15 TO APRIL 15).
6. SANDBAGS SHALL BE STOCKPILED ON SITE, READY TO BE PLACED IN POSITION WHEN RAIN IS FORECAST, OR WHEN THE INSPECTOR SO DIRECTS.
7. A "STANDBY EMERGENCY CREW" SHALL BE ALERTED BY THE PERMITTEE OR THE CONTRACTOR TO PERFORM EMERGENCY WORK DURING RAINSTORMS. THE PARTY TO BE CONTACTED IS:
   NAME: _____ (TO BE FILLED IN BY CONTRACTOR)
   PHONE NUMBER: _____

EROSION CONTROL NOTES:

1. DUST SHALL BE CONTROLLED BY WATERING AND/OR APPLYING A DUST PALLIATIVE. THE DUST PALLIATIVE SHALL BE APPLIED IN THE AMOUNT AT THE LOCATIONS AS DIRECTED BY THE ENGINEER.
2. WATER FOR DUST CONTROL SHALL BE APPLIED BY MEANS OF PRESSURE TYPE DISTRIBUTORS OR PIPE LINES EQUIPPED WITH A SPAY SYSTEM OR HOSES WITH NOZZLES THAT WILL INSURE A UNIFORM APPLICATION OF WATER.
3. UNLESS WATER IS APPLIED BY MEANS OF PIPE LINES, AT LEAST ONE MOBILE UNIT WITH A MINIMUM CAPACITY OF 100 GALLONS SHALL BE AVAILABLE FOR APPLYING WATER.
4. ALL SOIL MATERIALS OR DEBRIS TRUCKED FROM THE SITE SHALL BE COVERED AND SPRINKLED PRIOR TO ENTERING PUBLIC STREETS.
5. PROVIDE FOR WET SUPPRESSION OR CHEMICAL STABILIZING OF EXPOSED SOILS.
6. PROVIDE FOR RAPID CLEAN–UP OF SEDIMENTS DEPOSITED ON THE PAVED ROADS.
7. LIMIT THE AMOUNT OF AREAS DISTURBED BY CLEARING & EARTH MOVING OPERATIONS BY SCHEDULING THESE ACTIVITIES IN PHASES.

EROSION CONTROL CONSTRUCTION NOTES:

E1 PROVIDE INLET PROTECTION PER DETAIL 1, ON SHEET C5.00.
E2 PLACE SANDBAGS TRIPLE ROW PER DETAIL 2, ON SHEET C5.00.
E3 STABILIZED CONSTRUCTION ENTRANCE PER DETAIL 3, ON SHEET C5.00.
E4 6' CHAIN LINK FENCE AROUND PARKWAY, TREE PROTECTION ZONE, PER CITY OF SANTA MONICA STANDARDS.

LEGEND:

	LIMIT LINE OF EROSION CONTROL
	SANDBAGS
	FLOW ARROWS
	6' CHAIN LINK FENCE AROUND CITY STREET TREES PROTECTION ZONE DURING ALL STAGES OF CONSTRUCTION
TPZ	TREE PROTECTION ZONE, SEE SHEET C0.10 FOR ADDITIONAL DETAILS

TREE PROTECTION ZONE (TPZ) NOTES:

1. COORDINATE ALL OFF–SITE IMPROVEMENTS WITHIN THE TPZ WITH THE COMMUNITY FORESTERS OFFICE.
2. NO CONSTRUCTION MATERIALS OR ACTIVITIES ALLOWED IN THIS AREA.
3. PRUNING OF CITY TREES TO PROVIDE CLEARANCE FOR CONSTRUCTION ACTIVITIES SHALL ONLY BE DONE BY CITY OF SANTA MONICA COMMUNITY FOREST OPERATIONS.
4. FENCE THE TPZ AS SHOWN WITH A 6' CHAIN LINK FENCE TO PREVENT WOUNDS TO THE TREE AND SOIL COMPACTION WITHIN THE ROOT ZONE. POST THE FENCE WITH A SIGN STATING "TREE PROTECTION ZONE – KEEP OUT".

REFER TO TREE PROTECTION ZONE GUIDELINES ON SHEET C0.10 FOR FURTHER INFORMATION.

PLAN
SCALE: 1" = 20'–0"
0 10' 20' 40'
GRAPHIC SCALE

PICO BRANCH LIBRARY

2201 Pico Blvd.
Santa Monica, CA 90404

PROJECT

KoningEizenberg Architecture
1454 25th St, Santa Monica, CA 90404
310.828.6131 info@kearch.com
310.828.0719 fax www.kearch.com

ARCHITECT'S PROJECT NO.
1001

ARCHITECT

All designs, ideas, arrangements and plans indicated by these drawings are the property and copyright of the Architect and shall neither be used on any other work nor be disclosed to any other person for any use whatsoever without written permission.

Koning Eizenberg Architecture and/or its principals and employees waives any and all liability or responsibility for problems that may occur when these plans, drawings, specifications, and/or designs are followed without the professional's guidance with ambiguities, or conflicts which are alleged.

REGISTERED PROFESSIONAL ENGINEER JEFFREY B. CAU No. C59894 Exp. 12/31/11 CIVIL STATE OF CALIFORNIA
PRELIMINARY

kpff Consulting Engineers
6080 Center Dr, Suite 700
Los Angeles, California 90045
(310) 665-2800 Fax (310) 665-9075

CONSULTANT

City of Santa Monica
Architecture Services
1437 4TH STREET, SUITE 300
SANTA MONICA, CA 90401
TEL. (310) 458-2205
FAX. (310) 399-1541
architecture@smgov.net

DATE : _____ 20 __
SUBMITTED BY :

DATE : _____ 20 __
APPROVED BY :
Miriam Mulder,
Architecture Services Manager
CITY OF SANTA MONICA
DEPARTMENT OF PUBLIC WORKS

REVIEWED BY : DATE : _____ 20 __

REVIEWED BY : DATE : _____ 20 __

REVIEWED BY : DATE : _____ 20 __

CITY CLIENT

NO.	DATE	BY	DESCRIPTION

REVISIONS

ISSUE
65% CONSTRUCTION DOCUMENTS / BID SET

DATE
01/23/2012

DRAWING NO. **6693**

SHEET OF SHEETS

SHEET TITLE
Erosion Control Plan

SHEET NO.
C1.00

TITLE OF PROJECT P:\2009\109294 Pico Branch Library, Santa Monica\DWG\SHEET\109294C-1.00EC.dwg, Jan 20, 2012 - 2:02pm

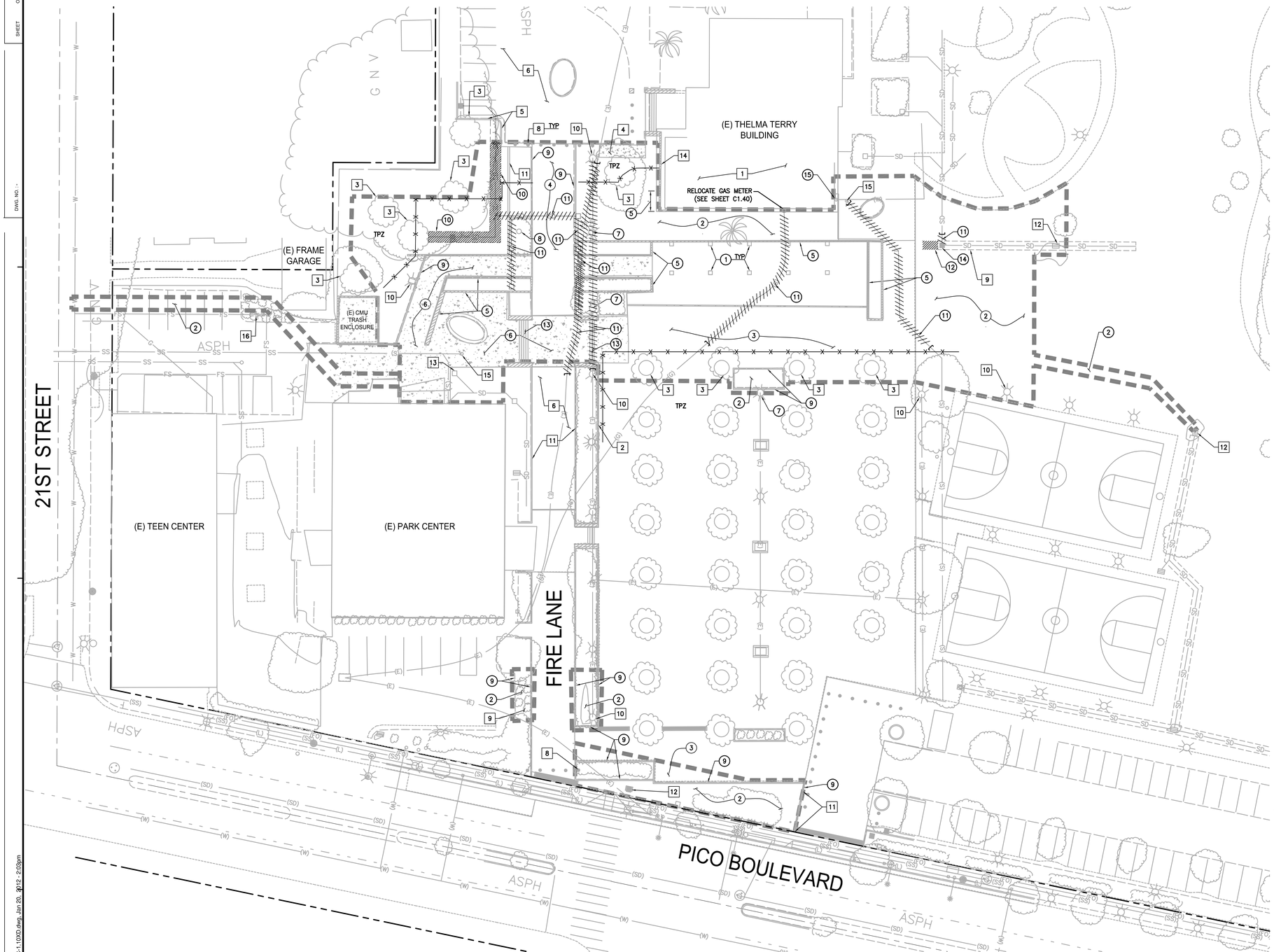

GENERAL DEMOLITION NOTES:

1. CONTRACTOR TO CLEAR PROJECT SITE AREA WITHIN THE CONFINES OF THE DEMOLITION LIMIT LINE. THE CONTRACTOR SHALL DEMOLISH AND REMOVE FROM THE SITE ALL EXISTING UTILITIES, STRUCTURES, PLANTERS, TREES, AND ALL OTHER SITE FEATURES, UNLESS OTHERWISE NOTED ON THE PLAN.
2. REMOVAL OF LANDSCAPING SHALL INCLUDE ROOTS AND ORGANIC MATERIALS.
3. THE CONTRACTOR SHALL BE RESPONSIBLE FOR OBTAINING ANY AND ALL PERMITS AND SHALL PAY ALL FEES NECESSARY FOR ENCROACHMENT, GRADING, DEMOLITION AND DISPOSAL OF SAID MATERIALS AS REQUIRED BY PRIVATE, LOCAL AND STATE JURISDICTIONS.
4. THE CONTRACTOR SHALL BE RESPONSIBLE FOR A SITE INSPECTION TO FULLY ACKNOWLEDGE THE EXTENT OF THE DEMOLITION WORK.
5. THE CONTRACTOR SHALL VERIFY AND LOCATE ALL EXISTING ABOVE AND UNDERGROUND UTILITIES. LOCATIONS SHOWN ON THE PLANS ARE APPROXIMATE AND ARE SHOWN FOR GENERAL INFORMATION ONLY.
6. DAMAGE TO ANY EXISTING UTILITIES AND SERVICES TO REMAIN SHALL BE THE RESPONSIBILITY OF THE CONTRACTOR. CONTRACTOR SHALL REPAIR AND/OR REPLACE IN KIND.
7. EROSION CONTROL MEASURES SHALL BE IMPLEMENTED TO PREVENT DEBRIS AND UNSUITABLE MATERIALS FROM ENTERING STORM DRAINS, SANITARY SEWERS AND STREETS.
8. DUST CONTROL SHALL BE IMPLEMENTED DURING DEMOLITION.
9. DEMOLITION IS LIMITED TO WITHIN DEMOLITION LIMIT LINE UNLESS NOTED OTHERWISE.
10. THE CONTRACTOR SHALL VERIFY THE LOCATION AND QUANTITY OF EXISTING SURFACE STRUCTURES AND SHALL BE SOLELY RESPONSIBLE FOR ANY UNIDENTIFIED UTILITIES, IMPROVEMENTS, TREES, ETC. TO BE DEMOLISHED AND REMOVED WITHIN THE DEMOLITION LIMIT LINE, INCLUDING APPURTENANT FOUNDATIONS OR SUPPORTS.
11. DEMOLITION CALLOUTS IN THIS SECTION ARE REPRESENTATIVE OF WHAT IS TO BE DONE, NOT AN ITEMIZED ACCOUNTING FOR EACH PIPE, CATCH BASIN, MANHOLE, VAULT, ETC. THAT IS TO BE DEMOLISHED, REMOVED AND DISPOSED OF.

DEMOLITION NOTES:

PROTECT–IN–PLACE

1. PROTECT–IN–PLACE EXISTING BUILDING. SEE ARCHITECTURAL PLANS FOR SELECTIVE DEMOLITION.
2. PROTECT–IN–PLACE EXISTING SEAT WALL.
3. PROTECT–IN–PLACE EXISTING TREE.
4. PROTECT–IN–PLACE EXISTING SIDEWALK.
5. PROTECT–IN–PLACE EXISTING CURB AND GUTTER.
6. PROTECT–IN–PLACE EXISTING ASPHALT PAVEMENT.
7. NOT USED.
8. PROTECT–IN–PLACE EXISTING BOLLARDS.
9. PROTECT–IN–PLACE PORTION OF EXISTING INFILTRATION TRENCH.
10. PROTECT–IN–PLACE EXISTING YARD LIGHT.
11. PROTECT–IN–PLACE EXISTING CURB.
12. PROTECT–IN–PLACE EXISTING CATCH BASIN.
13. PROTECT–IN–PLACE EXISTING PLANTER DRAIN.
14. PROTECT–IN–PLACE EXISTING SITE WALL.
15. PROTECT–IN–PLACE EXISTING SANITARY SEWER CLEANOUT.
16. PROTECT–IN–PLACE EXISTING BACKFLOW PREVENTION DEVICE.

REMOVE & DEMOLISH

1. DEMOLISH EXISTING TRELLIS. SEE ARCHITECTURAL PLANS AND SPECIFICATIONS FOR DETAILS.
2. SEE GENERAL DEMOLITION NOTES HEREON.
3. DEMOLISH EXISTING RESIN PAVEMENT.
4. DEMOLISH EXISTING ASPHALT PAVEMENT.
5. DEMOLISH EXISTING SITEWALL.
6. DEMOLISH EXISTING CONCRETE PAVEMENT.
7. REMOVE AND RELOCATE EXISTING YARD LIGHT. SEE ELECTRICAL PLANS FOR NEW LOCATION.
8. REMOVE AND RELOCATE EXISTING FLAG POLE. SEE ARCHITECTURAL PLANS FOR NEW LOCATION.
9. DEMOLISH EXISTING CONCRETE CURB.
10. DEMOLISH EXISTING INFILTRATION TRENCH INCLUDING ITS LONGITUDINAL PERFORATED PIPE AND TEST STATION.
11. DEMOLISH EXISTING UTILITY. CONTRACTOR TO CONFIRM SIZE AND LOCATION OF EXISTING UTILITY PRIOR TO CONSTRUCTION.
12. DEMOLISH PORTION OF EXISTING INFILTRATION TRENCH INCLUDING ITS LONGITUDINAL PERFORATED PIPE.
13. DEMOLISH EXISTING CONCRETE STAIRS.
14. REMOVE EXISTING CATCH BASIN.
15. REMOVE AND RELOCATE EXISTING WATER VALVE.

LEGEND:

— — — —	LIMIT LINE OF DEMOLITION
—X—X—X—	6' CHAIN LINK FENCE AROUND CITY STREET TREES PROTECTION ZONE DURING ALL STAGES OF CONSTRUCTION
//////////////	TO BE DEMOLISHED
TPZ	TREE PROTECTION ZONE, SEE SHEET C0.10 FOR ADDITIONAL DETAILS
]	CAP PIPE FUTURE FOR POINT OF CONNECTION/STUB OUT

TREE PROTECTION ZONE (TPZ) NOTES:

1. COORDINATE ALL OFF–SITE IMPROVEMENTS WITHIN THE TPZ WITH THE COMMUNITY FORESTERS OFFICE.
2. NO CONSTRUCTION MATERIALS OR ACTIVITIES ALLOWED IN THIS AREA.
3. PRUNING OF CITY TREES TO PROVIDE CLEARANCE FOR CONSTRUCTION ACTIVITIES SHALL ONLY BE DONE BY CITY OF SANTA MONICA COMMUNITY FOREST OPERATIONS.
4. FENCE THE TPZ AS SHOWN WITH A 6' CHAIN LINK FENCE TO PREVENT WOUNDS TO THE TREE AND SOIL COMPACTION WITHIN THE ROOT ZONE. POST THE FENCE WITH A SIGN STATING "TREE PROTECTION ZONE – KEEP OUT".

REFER TO TREE PROTECTION ZONE GUIDELINES ON SHEET C0.10 FOR FURTHER INFORMATION.

PLAN
SCALE: 1" = 20'–0"
0 10' 20' 40'
GRAPHIC SCALE

PICO BRANCH LIBRARY

2201 Pico Blvd.
Santa Monica, CA 90404

PROJECT

KoningEizenbergArchitecture
1454 25th St, Santa Monica, CA 90404
310.828.6131 info@kearch.com
310.828.0719 fax www.kearch.com

ARCHITECT'S PROJECT NO.
1001

ARCHITECT

All designs, ideas, arrangements and plans indicated by these drawings are the property and copyright of the Architect and shall neither be used on any other work nor be disclosed to any other person for any use whatsoever without written permission.

Koning Eizenberg Architecture and/or its principals and employees waives any and all liability or responsibility for problems that may occur when these plans, drawings, specifications, and/or designs are followed without the professional's guidance with ambiguities, or conflicts which are alleged.

REGISTERED PROFESSIONAL ENGINEER JEFFREY B. CAVE BOZZER No. C59894 Exp. 12/31/11 CIVIL STATE OF CALIFORNIA
UNOFFICIAL

kpff Consulting Engineers
6080 Center Dr, Suite 700
Los Angeles, California 90045
(310) 665-2800 Fax (310) 665-9075

CONSULTANT

City of Santa Monica Architecture Services
1437 4TH STREET, SUITE 300
SANTA MONICA, CA 90401
TEL. (310) 458-2205
FAX. (310) 399-1541
architecture@smgov.net

DATE : _____ 20 __
SUBMITTED BY :

DATE : _____ 20 __
APPROVED BY :
Miriam Mulder,
Architecture Services Manager
CITY OF SANTA MONICA
DEPARTMENT OF PUBLIC WORKS

REVIEWED BY : DATE : _____ 20 __

REVIEWED BY : DATE : _____ 20 __

REVIEWED BY : DATE : _____ 20 __

CITY CLIENT

NO.	DATE	BY	DESCRIPTION

REVISIONS

ISSUE
65% CONSTRUCTION DOCUMENTS / BID SET

DATE
01/23/2012

DRAWING NO. **6693**

SHEET OF SHEETS

SHEET TITLE
Demolition Plan

SHEET NO.
C1.10

TITLE OF PROJECT P:\2009\109294 Pico Branch Library, Santa Monica\DWG\SHEET\109294C-1.10XD.dwg, Jan 20, 2012 - 2:03pm

DWG NO. -

SHEET OF

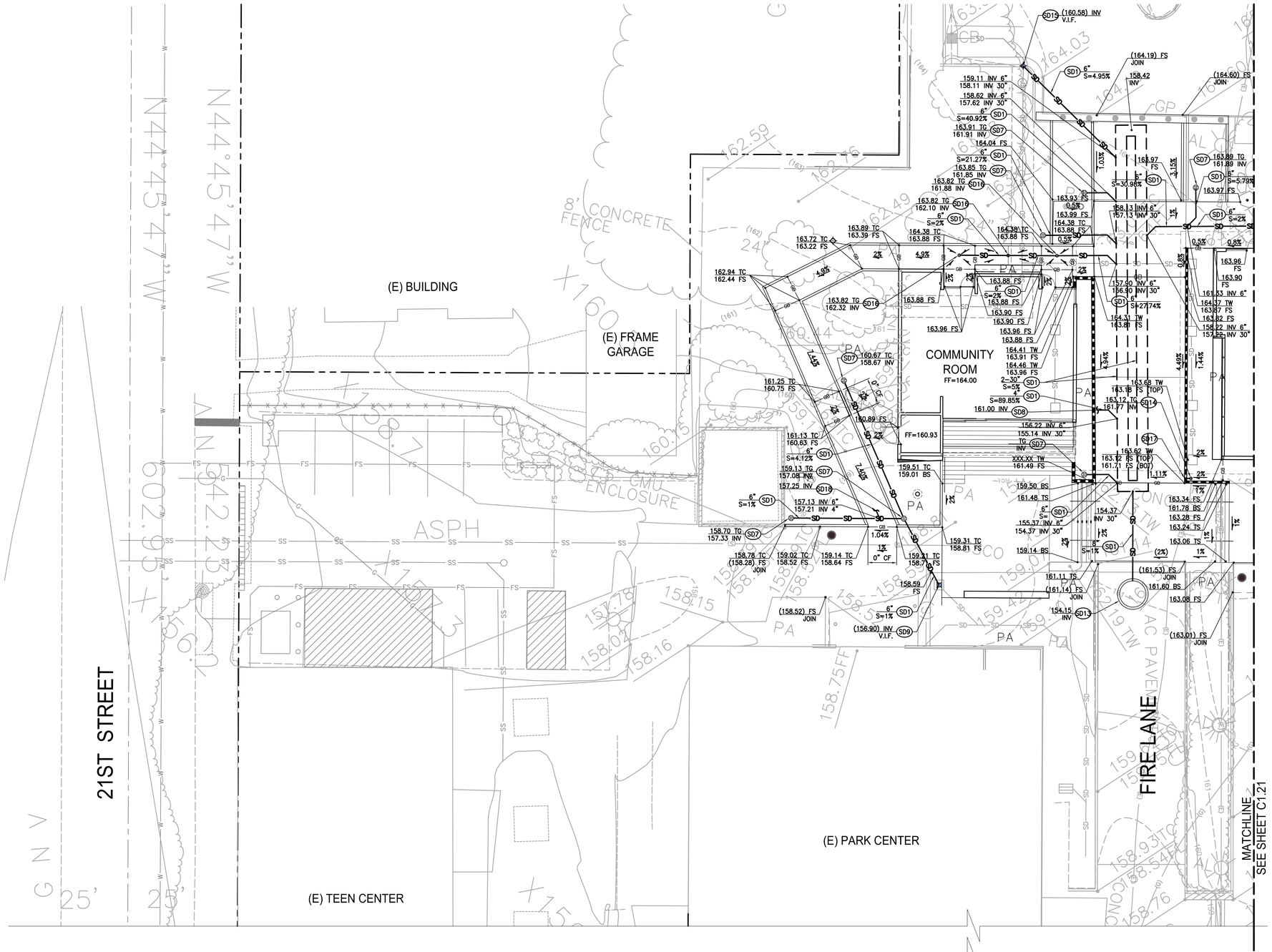

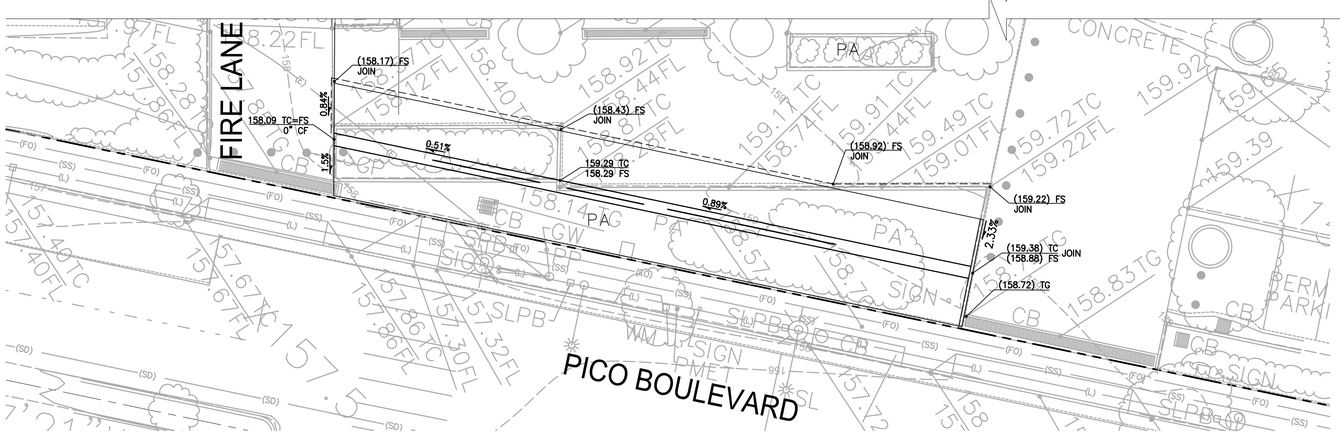

UTILITY CONSTRUCTION NOTES:

STORM DRAIN

SD1 PVC, SDR-35 STORM DRAIN PIPE PER DETAIL 8, ON SHEET C5.00. SIZE AND SLOPE PER PLAN.

SD2 24"X24" PRECAST CONCRETE CATCH BASIN PER BROOKS PRODUCTS 2424 CB WITH PARKWAY RATED CAST IRON GRATE OR APPROVED EQUAL. SEE DETAIL 2, ON SHEET C5.01.

SD3 CONSTRUCT TEST STATION MARKER PER DETAIL 5, ON SHEET C5.00. REFER TO INFILTRATION TRENCH DETAIL 7, ON SHEET C5.00 FOR APPLICATION.

SD4 CONSTRUCT INFILTRATION TRENCH PER DETAIL 7, ON SHEET C5.00. LONGITUDINAL PIPE IS 6" DIAMETER PERFORATED PIPE. WHILE EXCAVATING TRENCH ALL TREE ROOTS ENCOUNTERED SHALL BE HAND SAWN.

SD5 CDS STORMWATER TREATMENT UNIT.

SD6 STANDARD CLEANOUT PER DETAIL 6, ON SHEET C5.00.

SD7 PLANTER DRAIN PER DETAIL 1, ON SHEET C5.01.

SD8 POINT OF CONNECTION 5 FEET FROM BUILDING FACE. SEE PLUMBING DRAWINGS FOR CONTINUATION.

SD9 CONNECTION TO EXISTING PLANTER DRAIN. CONTRACTOR TO COORDINATE LOCATION AND INVERT ELEVATIONS PRIOR TO CONSTRUCTION.

SD10 NOT USED.

SD11 12"X12" PRECAST CONCRETE CATCH BASIN PER BROOKS PRODUCTS 1212 CB WITH PARKWAY RATED CAST IRON GRATE OR APPROVED EQUAL. SEE DETAIL 5, ON SHEET C5.01.

SD12 SHALLOW DEPTH CLEANOUT PER DETAIL 6, ON SHEET C5.01.

SD13 MAXWELL PLUS DRYWELL SYSTEM. 6'ø X 10' DEEP.

SD14 AREA DRAIN PER JAY R. SMITH 2005 Y-PIPE SIZE A8PB OR APPROVED EQUIVALENT. LATERALS FROM AREA DRAIN SHALL BE 3" PVC UNLESS NOTED OTHERWISE.

SD15 CONNECT TO EXISTING 6" PVC STORM DRAIN PIPE. CONTRACTOR TO COORDINATE LOCATION AND INVERT ELEVATIONS PRIOR TO CONSTRUCTION.

SD16 AREA DRAIN PER JAY R. SMITH 2005 Y-PIPE SIZE A8PB OR APPROVED EQUIVALENT. LATERALS FROM AREA DRAIN CONNECTING TO MAIN SHALL BE 6" PVC UNLESS NOTED OTHERWISE.

SD17 DISCHARGE PIPE THROUGH FACE OF CONCRETE RETAINING WALL. INVERT OF PIPE SHALL BE SET 1/2" HIGHER THAN THE FINISHED SURFACE.

SD18 POINT OF CONNECTION. SEE LANDSCAPE DRAWINGS FOR CONTINUATION.

SD19 BREAK INTO EXISTING CATCH BASIN AND CONNECT NEW OVERFLOW PIPE. CONTRACTOR TO COORDINATE LOCATION AND INVERT ELEVATIONS PRIOR TO CONSTRUCTION.

TREE PROTECTION ZONE (TPZ) NOTES:

1. COORDINATE ALL OFF-SITE IMPROVEMENTS WITHIN THE TPZ WITH THE COMMUNITY FORESTERS OFFICE.
2. NO CONSTRUCTION MATERIALS OR ACTIVITIES ALLOWED IN THIS AREA.
3. PRUNING OF CITY TREES TO PROVIDE CLEARANCE FOR CONSTRUCTION ACTIVITIES SHALL ONLY BE DONE BY CITY OF SANTA MONICA COMMUNITY FOREST OPERATIONS.
4. FENCE THE TPZ AS SHOWN WITH A 6' CHAIN LINK FENCE TO PREVENT WOUNDS TO THE TREE AND SOIL COMPACTION WITHIN THE ROOT ZONE. POST THE FENCE WITH A SIGN STATING "TREE PROTECTION ZONE – KEEP OUT".

REFER TO TREE PROTECTION ZONE GUIDELINES ON SHEET C0.10 FOR FURTHER INFORMATION.

PLAN
SCALE: 1" = 10'-0"
0 5' 10' 20'
GRAPHIC SCALE

PICO BRANCH LIBRARY

2201 Pico Blvd.
Santa Monica, CA 90404

PROJECT

KoningEizenberg Architecture
1454 25th St, Santa Monica, CA 90404
310.828.6131 info@kearch.com
310.828.0719 fax www.kearch.com

ARCHITECT'S PROJECT NO.
1001

ARCHITECT

All designs, ideas, arrangements and plans indicated by these drawings are the property and copyright of the Architect and shall neither be used on any other work nor be disclosed to any other person for any use whatsoever without written permission.

Koning Eizenberg Architecture and/or its principals and employees waives any and all liability or responsibility for problems that may occur when these plans, drawings, specifications, and/or designs are followed without the professional's guidance with ambiguities, or conflicts which are alleged.

REGISTERED PROFESSIONAL ENGINEER JEFFREY B. CHU, PE
No. C59894
Exp. 12/31/11
CIVIL
STATE OF CALIFORNIA
SIGNATURE

kpff Consulting Engineers
6080 Center Dr, Suite 700
Los Angeles, California 90045
(310) 665-2800 Fax (310) 665-9075

CONSULTANT

City of Santa Monica
Architecture Services
1437 4TH STREET, SUITE 300
SANTA MONICA, CA 90401
TEL. (310) 458-2205
FAX. (310) 399-1541
architecture@smgov.net

DATE : 20
SUBMITTED BY :

DATE : 20
APPROVED BY :
Miriam Mulder,
Architecture Services Manager

CITY OF SANTA MONICA
DEPARTMENT OF PUBLIC WORKS

REVIEWED BY : DATE : 20

REVIEWED BY : DATE : 20

REVIEWED BY : DATE : 20

CITY CLIENT

NO.	DATE	BY	DESCRIPTION

REVISIONS

ISSUE
65% CONSTRUCTION DOCUMENTS / BID SET

DATE
01/23/2012

DRAWING NO. **6693**

SHEET OF SHEETS

SHEET TITLE
Grading and Drainage Plan

SHEET NO.
C1.20

TITLE OF PROJECT P:\2009\109294 Pico Branch Library, Santa Monica\DWG\SHEET\109294C-1.20GP.dwg, Jan 23, 2012 - 2:08pm

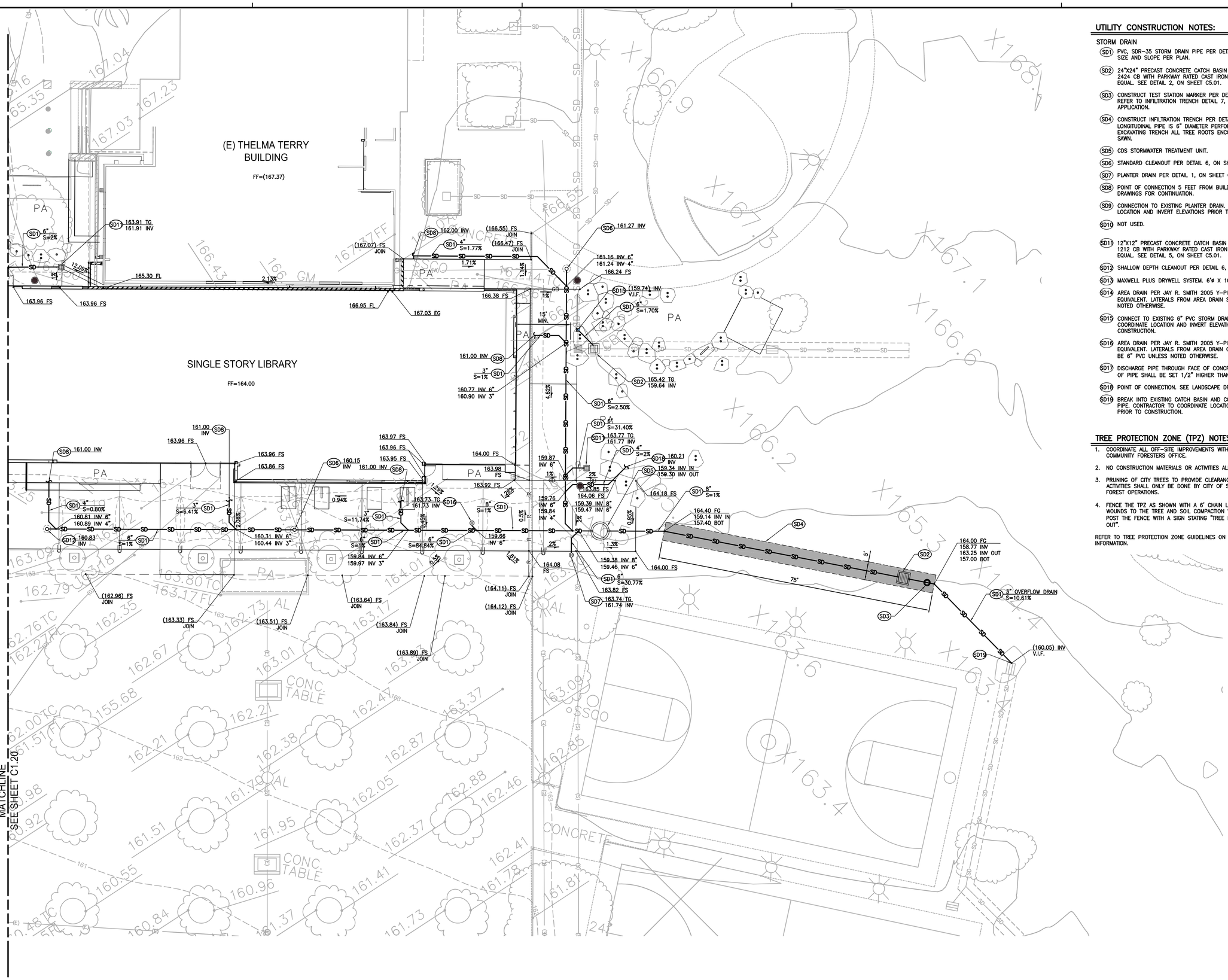

UTILITY CONSTRUCTION NOTES:

STORM DRAIN

- SD1 PVC, SDR-35 STORM DRAIN PIPE PER DETAIL 8, ON SHEET C5.00. SIZE AND SLOPE PER PLAN.
- SD2 24"X24" PRECAST CONCRETE CATCH BASIN PER BROOKS PRODUCTS 2424 CB WITH PARKWAY RATED CAST IRON GRATE OR APPROVED EQUAL. SEE DETAIL 2, ON SHEET C5.01.
- SD3 CONSTRUCT TEST STATION MARKER PER DETAIL 5, ON SHEET C5.00. REFER TO INFILTRATION TRENCH DETAIL 7, ON SHEET C5.00 FOR APPLICATION.
- SD4 CONSTRUCT INFILTRATION TRENCH PER DETAIL 7, ON SHEET C5.00. LONGITUDINAL PIPE IS 6" DIAMETER PERFORATED PIPE. WHILE EXCAVATING TRENCH ALL TREE ROOTS ENCOUNTERED SHALL BE HAND SAWN.
- SD5 CDS STORMWATER TREATMENT UNIT.
- SD6 STANDARD CLEANOUT PER DETAIL 6, ON SHEET C5.00.
- SD7 PLANTER DRAIN PER DETAIL 1, ON SHEET C5.01.
- SD8 POINT OF CONNECTION 5 FEET FROM BUILDING FACE. SEE PLUMBING DRAWINGS FOR CONTINUATION.
- SD9 CONNECTION TO EXISTING PLANTER DRAIN. CONTRACTOR TO COORDINATE LOCATION AND INVERT ELEVATIONS PRIOR TO CONSTRUCTION.
- SD10 NOT USED.
- SD11 12"X12" PRECAST CONCRETE CATCH BASIN PER BROOKS PRODUCTS 1212 CB WITH PARKWAY RATED CAST IRON GRATE OR APPROVED EQUAL. SEE DETAIL 5, ON SHEET C5.01.
- SD12 SHALLOW DEPTH CLEANOUT PER DETAIL 6, ON SHEET C5.01.
- SD13 MAXWELL PLUS DRYWELL SYSTEM. 6'ø X 10' DEEP.
- SD14 AREA DRAIN PER JAY R. SMITH 2005 Y-PIPE SIZE A8PB OR APPROVED EQUIVALENT. LATERALS FROM AREA DRAIN SHALL BE 3" PVC UNLESS NOTED OTHERWISE.
- SD15 CONNECT TO EXISTING 6" PVC STORM DRAIN PIPE. CONTRACTOR TO COORDINATE LOCATION AND INVERT ELEVATIONS PRIOR TO CONSTRUCTION.
- SD16 AREA DRAIN PER JAY R. SMITH 2005 Y-PIPE SIZE A8PB OR APPROVED EQUIVALENT. LATERALS FROM AREA DRAIN CONNECTING TO MAIN SHALL BE 6" PVC UNLESS NOTED OTHERWISE.
- SD17 DISCHARGE PIPE THROUGH FACE OF CONCRETE RETAINING WALL. INVERT OF PIPE SHALL BE SET 1/2" HIGHER THAN THE FINISHED SURFACE.
- SD18 POINT OF CONNECTION. SEE LANDSCAPE DRAWINGS FOR CONTINUATION.
- SD19 BREAK INTO EXISTING CATCH BASIN AND CONNECT NEW OVERFLOW PIPE. CONTRACTOR TO COORDINATE LOCATION AND INVERT ELEVATIONS PRIOR TO CONSTRUCTION.

TREE PROTECTION ZONE (TPZ) NOTES:

1. COORDINATE ALL OFF-SITE IMPROVEMENTS WITHIN THE TPZ WITH THE COMMUNITY FORESTERS OFFICE.
2. NO CONSTRUCTION MATERIALS OR ACTIVITIES ALLOWED IN THIS AREA.
3. PRUNING OF CITY TREES TO PROVIDE CLEARANCE FOR CONSTRUCTION ACTIVITIES SHALL ONLY BE DONE BY CITY OF SANTA MONICA COMMUNITY FOREST OPERATIONS.
4. FENCE THE TPZ AS SHOWN WITH A 6' CHAIN LINK FENCE TO PREVENT WOUNDS TO THE TREE AND SOIL COMPACTION WITHIN THE ROOT ZONE. POST THE FENCE WITH A SIGN STATING "TREE PROTECTION ZONE – KEEP OUT".

REFER TO TREE PROTECTION ZONE GUIDELINES ON SHEET C0.10 FOR FURTHER INFORMATION.

PICO BRANCH LIBRARY

2201 Pico Blvd.
Santa Monica, CA 90404

PROJECT

KoningEizenberg Architecture
1454 25th St, Santa Monica, CA 90404
310.828.6131 info@kearch.com
310.828.0719 fax www.kearch.com

ARCHITECT'S PROJECT NO.
1001

ARCHITECT

All designs, ideas, arrangements and plans indicated by these drawings are the property and copyright of the Architect and shall neither be used on any other work nor be disclosed to any other person for any use whatsoever without written permission.

Koning Eizenberg Architecture and/or its principals and employees waives any and all liability or responsibility for problems that may occur when these plans, drawings, specifications, and/or designs are followed without the professional's guidance with ambiguities, or conflicts which are alleged.

REGISTERED PROFESSIONAL ENGINEER JEFFREY B. CAW No. C59894 Exp. 12/31/11 CIVIL STATE OF CALIFORNIA
PRELIMINARY

kpff Consulting Engineers
6080 Center Dr, Suite 700
Los Angeles, California 90045
(310) 665-2800 Fax (310) 665-9075

CONSULTANT

City of Santa Monica
Architecture Services
1437 4TH STREET, SUITE 300
SANTA MONICA, CA 90401
TEL. (310) 458-2205
FAX. (310) 399-1541
architecture@smgov.net

SUBMITTED BY : DATE : 20

APPROVED BY : DATE : 20
Miriam Mulder,
Architecture Services Manager

CITY OF SANTA MONICA
DEPARTMENT OF PUBLIC WORKS

REVIEWED BY : DATE : 20

REVIEWED BY : DATE : 20

REVIEWED BY : DATE : 20

CITY CLIENT

NO.	DATE	BY	DESCRIPTION

REVISIONS

ISSUE
65% CONSTRUCTION DOCUMENTS / BID SET

DATE
01/23/2012

DRAWING NO. **6693**

SHEET OF SHEETS

SHEET TITLE
Grading and Drainage Plan

SHEET NO.
C1.21

SHEET OF

DWG NO. -

TITLE OF PROJECT P:\2009\109294 Pico Branch Library, Santa Monica\DWG\SHEET\109294C-1.20GP.dwg, Jan 23, 2012 - 2:09pm

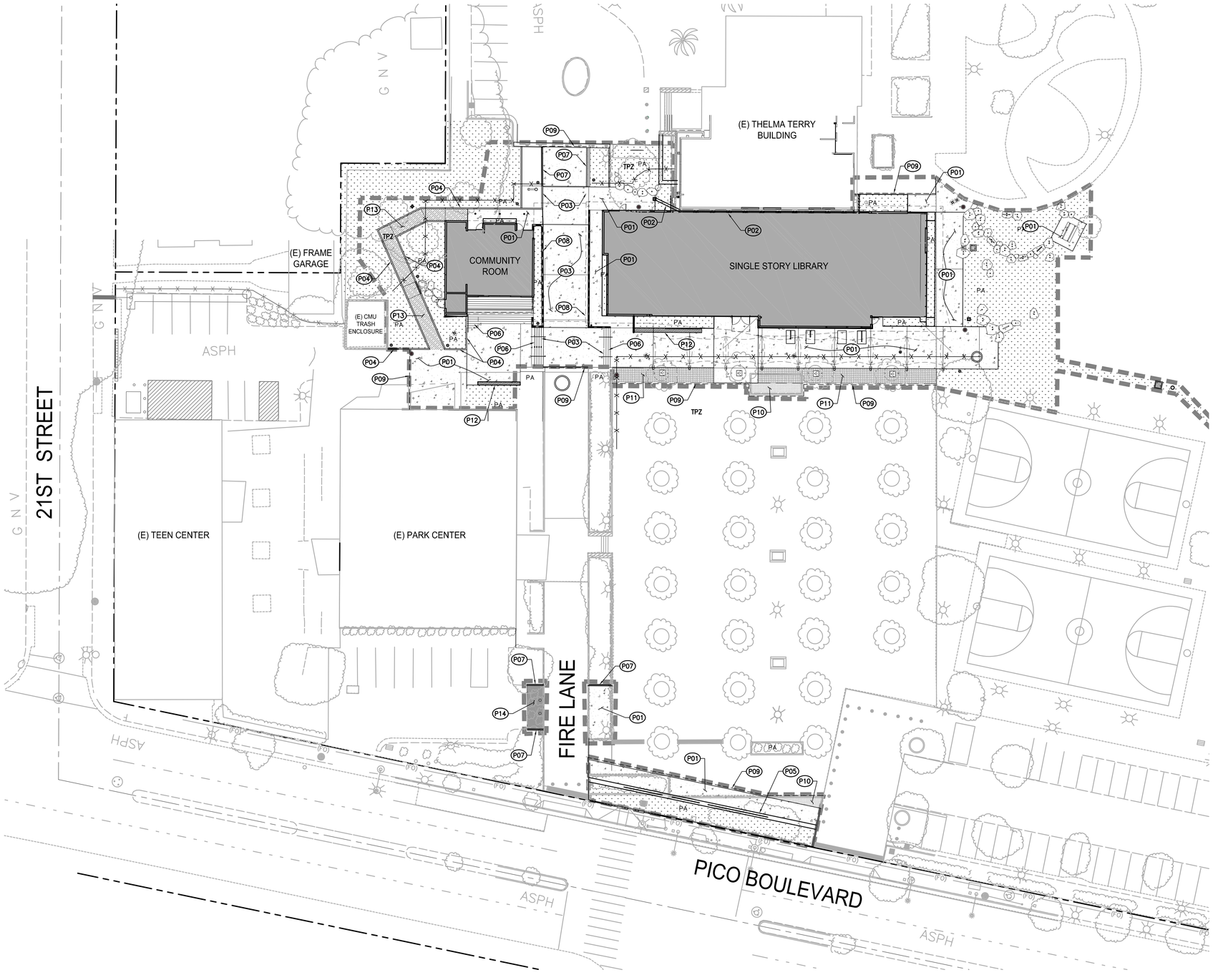

PAVING CONSTRUCTION NOTES:

- P01 CONCRETE WALK PER DETAIL 4 ON SHEET C5.01.
- P02 CONCRETE VALLEY GUTTER PER DETAIL 2 ON SHEET C5.01.
- P03 CONCRETE PAVEMENT PER DETAIL 10 ON SHEET C5.00.
- P04 RAISED CURB, TYPE 1. REFER TO LANDSCAPE PLANS FOR DETAILS.
- P05 RAISED CURB, TYPE 3. REFER TO LANDSCAPE PLANS FOR DETAILS.
- P06 C.I.P. CONCRETE STEPS WITH HANDRAILS. REFER TO ARCHITECTURAL PLANS FOR DETAILS.
- P07 MOW CURB. REFER TO LANDSCAPE PLANS FOR DETAILS.
- P08 C.I.P. CONCRETE RETAINING WALL. REFER TO LANDSCAPE PLANS FOR DETAILS.
- P09 SAWCUT AND JOIN EXISTING ASPHALT CONCRETE PAVEMENT/CONCRETE WALK/CONCRETE PAVEMENT.
- P10 RESIN PAVEMENT. REFER TO LANDSCAPE PLANS FOR DETAILS.
- P11 PERMEABLE PAVING. REFER TO LANDSCAPE PLANS FOR DETAILS.
- P12 C.I.P. CONCRETE SEAT WALL. REFER TO LANDSCAPE PLANS FOR DETAILS.
- P13 POROUS PAVING. REFER TO LANDSCAPE PLANS FOR DETAILS.
- P14 ASPHALT CONCRETE PAVEMENT PER DETAIL 9 ON SHEET C5.00.

LEGEND:

- PROPOSED BUILDING (REFER TO ARCHITECTURAL PLANS FOR DETAILS)
- CONCRETE (REFER TO SHEET C5.00 AND C5.01 FOR DETAILS)
- PLANTER AREA/LANDSCAPE (REFER TO LANDSCAPE PLANS FOR DETAILS)
- PERMEABLE PAVING (REFER TO LANDSCAPE PLANS FOR DETAILS)
- RESIN PAVEMENT (REFER TO LANDSCAPE PLANS FOR DETAILS)
- CONCRETE SEAT WALL (REFER TO LANDSCAPE PLANS FOR DETAILS)
- POROUS PAVING (REFER TO LANDSCAPE PLANS FOR DETAILS)
- ASPHALT PAVING (REFER TO SHEET C5.00 FOR DETAILS)
- CIVIL LIMIT OF WORK
- 6' CHAIN LINK FENCE AROUND CITY STREET TREES PROTECTION ZONE DURING ALL STAGES OF CONSTRUCTION
- TPZ — TREE PROTECTION ZONE, SEE SHEET C0.10 FOR ADDITIONAL DETAILS
- SAWCUT AND JOIN

TREE PROTECTION ZONE (TPZ) NOTES:

1. COORDINATE ALL OFF-SITE IMPROVEMENTS WITHIN THE TPZ WITH THE COMMUNITY FORESTERS OFFICE.
2. NO CONSTRUCTION MATERIALS OR ACTIVITIES ALLOWED IN THIS AREA.
3. PRUNING OF CITY TREES TO PROVIDE CLEARANCE FOR CONSTRUCTION ACTIVITIES SHALL ONLY BE DONE BY CITY OF SANTA MONICA COMMUNITY FOREST OPERATIONS.
4. FENCE THE TPZ AS SHOWN WITH A 6' CHAIN LINK FENCE TO PREVENT WOUNDS TO THE TREE AND SOIL COMPACTION WITHIN THE ROOT ZONE. POST THE FENCE WITH A SIGN STATING "TREE PROTECTION ZONE – KEEP OUT".

REFER TO TREE PROTECTION ZONE GUIDELINES ON SHEET C0.10 FOR FURTHER INFORMATION.

PLAN
SCALE: 1" = 20'-0"
0 10' 20' 40'
GRAPHIC SCALE

PICO BRANCH LIBRARY

2201 Pico Blvd.
Santa Monica, CA 90404

PROJECT

KoningEizenberg Architecture
1454 25th St, Santa Monica, CA 90404
310.828.6131 info@kearch.com
310.828.0719 fax www.kearch.com

ARCHITECT'S PROJECT NO. 1001

ARCHITECT

All designs, ideas, arrangements and plans indicated by these drawings are the property and copyright of the Architect and shall neither be used on any other work nor be disclosed to any other person for any use whatsoever without written permission.

Koning Eizenberg Architecture and/or its principals and employees waives any and all liability or responsibility for problems that may occur when these plans, drawings, specifications, and/or designs are followed without the professional's guidance with ambiguities, or conflicts which are alleged.

REGISTERED PROFESSIONAL ENGINEER JEFFREY B. CRUZ No. C59894 Exp. 12/31/11 CIVIL STATE OF CALIFORNIA
PRELIMINARY

kpff Consulting Engineers
6080 Center Dr, Suite 700
Los Angeles, California 90045
(310) 665-2800 Fax (310) 665-9075

CONSULTANT

City of Santa Monica Architecture Services
1437 4TH STREET, SUITE 300
SANTA MONICA, CA 90401
TEL. (310) 458-2205
FAX. (310) 399-1541
architecture@smgov.net

SUBMITTED BY : DATE : 20

APPROVED BY : Miriam Mulder, Architecture Services Manager DATE : 20

CITY OF SANTA MONICA
DEPARTMENT OF PUBLIC WORKS

REVIEWED BY : DATE : 20

REVIEWED BY : DATE : 20

REVIEWED BY : DATE : 20

CITY CLIENT

NO.	DATE	BY	DESCRIPTION

REVISIONS

ISSUE
65% CONSTRUCTION DOCUMENTS / BID SET

DATE
01/23/2012

DRAWING NO. 6693

SHEET OF SHEETS

SHEET TITLE
Paving and Horizontal Control Plan

SHEET NO.
C1.30

TITLE OF PROJECT: P:\2009\109294 Pico Branch Library, Santa Monica\DWG\SHEET\109294C-130HC.dwg, Jan 20, 2012 - 1:59pm

DWG NO. -

SHEET OF

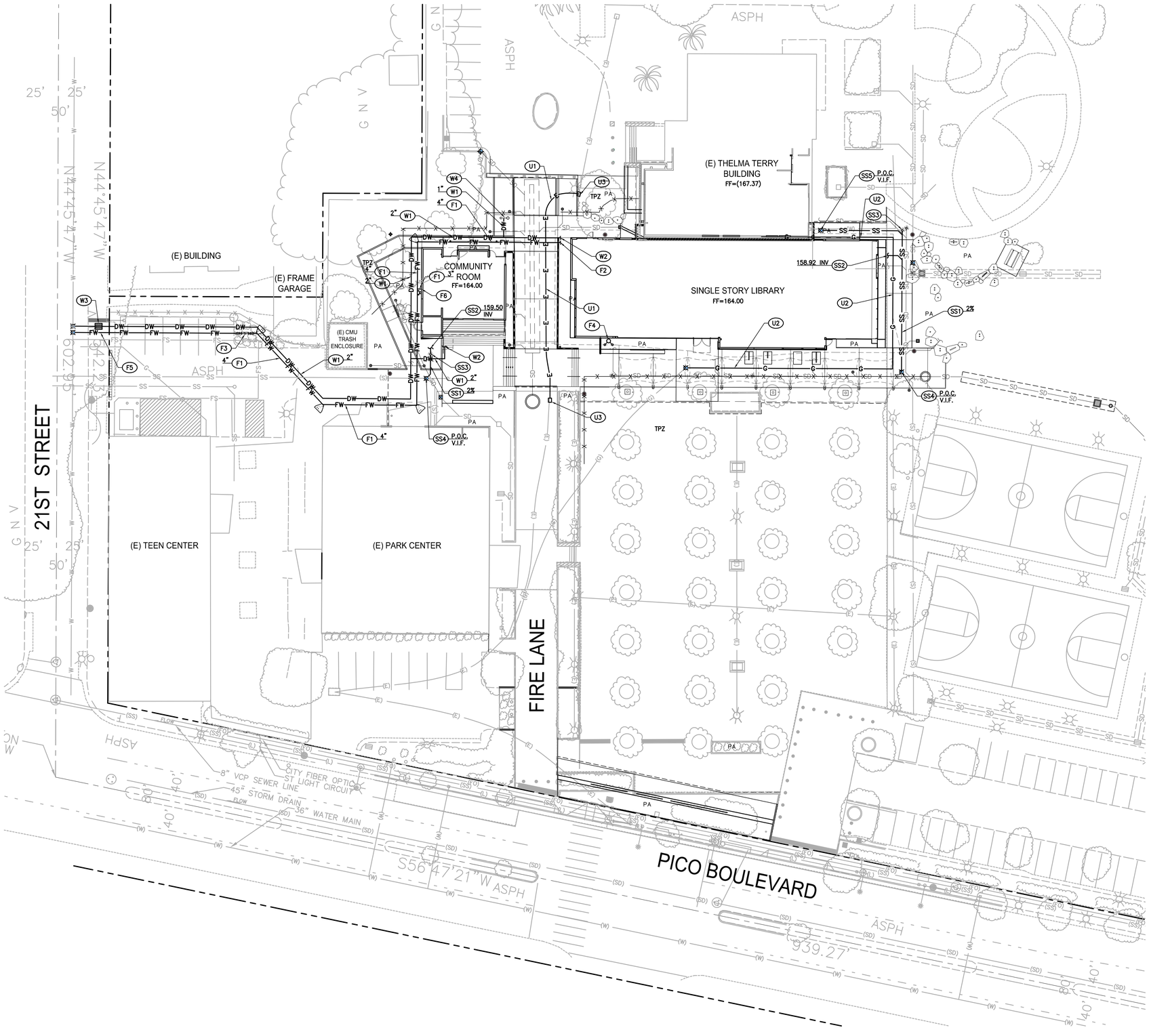

UTILITY CONSTRUCTION NOTES:

SANITARY SEWER

- SS1 4" PVC, SDR-35 SANITARY SEWER PIPE PER DETAIL 8, ON SHEET C5.00. SLOPE PER PLAN.
- SS2 POINT OF CONNECTION 5 FEET FROM BUILDING FACE. SEE PLUMBING DRAWINGS FOR CONTINUATION.
- SS3 CLEANOUT. PER DETAIL 6, ON SHEET C5.00.
- SS4 CONNECTION TO EXISTING SANITARY SEWER PIPE. CONTRACTOR TO COORDINATE LOCATION AND INVERT ELEVATIONS PRIOR TO CONSTRUCTION.
- SS5 CONNECTION TO EXISTING SANITARY SEWER CLEANOUT. CONTRACTOR TO COORDINATE LOCATION AND INVERT ELEVATIONS.

DOMESTIC WATER

- W1 PVC SCH-40 DOMESTIC WATER PIPE. SIZE PER PLAN.
- W2 POINT OF CONNECTION 5 FEET FROM BUILDING FACE. SEE PLUMBING DRAWINGS FOR CONTINUATION.
- W3 WATER METER VAULT. INSTALLATION BY CITY OF SANTA MONICA WATER DEPARTMENT. SHOWN FOR COORDINATION PURPOSES ONLY. CONTRACTOR TO COORDINATE WATER SERVICE CONNECTION WITH LOCAL PROVIDER.
- W4 CONNECT TO PROPOSED DRINKING FOUNTAIN. SEE ARCHITECTURAL PLANS FOR DETAILS.

FIRE WATER

- F1 PVC SCH-80 FIRE WATER PIPE. SIZE PER PLAN.
- F2 POINT OF CONNECTION 5 FEET FROM BUILDING FACE. SEE PLUMBING DRAWINGS FOR CONTINUATION.
- F3 BACKFLOW PREVENTION DEVICE PER DETAIL 4, ON SHEET C5.00.
- F4 FIRE DEPARTMENT CONNECTION. SEE PLUMBING DRAWINGS FOR DETAILS.
- F5 FIRE SERVICE CONNECTION. INSTALLATION BY CITY OF SANTA MONICA WATER DEPARTMENT. SHOWN FOR COORDINATION PURPOSES ONLY. CONTRACTOR TO COORDINATE WATER SERVICE CONNECTION WITH LOCAL PROVIDER.
- F6 POINT OF CONNECTION. SEE PLUMBING DRAWINGS FOR CONTINUATION.

OTHER UTILITIES

- U1 ELECTRICAL CONDUIT. SEE ELECTRICAL DRAWINGS FOR DETAILS AND SPECIFICATIONS. SHOWN FOR COORDINATION PURPOSES ONLY.
- U2 GAS LINE. SEE GAS COMPANY DRAWINGS FOR DETAILS AND SPECIFICATIONS. SHOWN FOR COORDINATION PURPOSES ONLY.
- U3 ELECTRICAL PULL BOX. SEE ELECTRICAL DRAWINGS FOR DETAILS AND SPECIFICATIONS. SHOWN FOR COORDINATION PURPOSES ONLY.

LEGEND:

—X—X—X— 6' CHAIN LINK FENCE AROUND CITY STREET TREES PROTECTION ZONE DURING ALL STAGES OF CONSTRUCTION

TPZ — TREE PROTECTION ZONE, SEE SHEET C0.10 FOR ADDITIONAL DETAILS

TREE PROTECTION ZONE (TPZ) NOTES:

1. COORDINATE ALL OFF-SITE IMPROVEMENTS WITHIN THE TPZ WITH THE COMMUNITY FORESTERS OFFICE.
2. NO CONSTRUCTION MATERIALS OR ACTIVITIES ALLOWED IN THIS AREA.
3. PRUNING OF CITY TREES TO PROVIDE CLEARANCE FOR CONSTRUCTION ACTIVITIES SHALL ONLY BE DONE BY CITY OF SANTA MONICA COMMUNITY FOREST OPERATIONS.
4. FENCE THE TPZ AS SHOWN WITH A 6' CHAIN LINK FENCE TO PREVENT WOUNDS TO THE TREE AND SOIL COMPACTION WITHIN THE ROOT ZONE. POST THE FENCE WITH A SIGN STATING "TREE PROTECTION ZONE – KEEP OUT".

REFER TO TREE PROTECTION ZONE GUIDELINES ON SHEET C0.10 FOR FURTHER INFORMATION.

PLAN
SCALE: 1" = 20'-0"
0 10' 20' 40'
GRAPHIC SCALE

PICO BRANCH LIBRARY

2201 Pico Blvd.
Santa Monica, CA 90404

PROJECT

KoningEizenberg Architecture
1454 25th St, Santa Monica, CA 90404
310.828.6131 info@kearch.com
310.828.0719 fax www.kearch.com

ARCHITECT'S PROJECT NO.
1001

ARCHITECT

All designs, ideas, arrangements and plans indicated by these drawings are the property and copyright of the Architect and shall neither be used on any other work nor be disclosed to any other person for any use whatsoever without written permission.

Koning Eizenberg Architecture and/or its principals and employees waives any and all liability or responsibility for problems that may occur when these plans, drawings, specifications, and/or designs are followed without the professional's guidance with ambiguities, or conflicts which are alleged.

REGISTERED PROFESSIONAL ENGINEER JEFFREY B. CHU 62224 No. C59894 Exp. 12/31/11 CIVIL STATE OF CALIFORNIA
UNOFFICIAL

kpff Consulting Engineers
6080 Center Dr, Suite 700
Los Angeles, California 90045
(310) 665-2800 Fax (310) 665-9075

CONSULTANT

City of Santa Monica
Architecture Services
1437 4TH STREET, SUITE 300
SANTA MONICA, CA 90401
TEL. (310) 458-2205
FAX. (310) 399-1541
architecture@smgov.net

SUBMITTED BY : DATE : 20

APPROVED BY : Miriam Mulder, Architecture Services Manager DATE : 20

CITY OF SANTA MONICA
DEPARTMENT OF PUBLIC WORKS

REVIEWED BY : DATE : 20

REVIEWED BY : DATE : 20

REVIEWED BY : DATE : 20

CITY CLIENT

NO.	DATE	BY	DESCRIPTION

REVISIONS

ISSUE
65% CONSTRUCTION DOCUMENTS / BID SET

DATE
01/23/2012

DRAWING NO. **6693**

SHEET OF SHEETS

SHEET TITLE
Utility Plan

SHEET NO.
C1.40

TITLE OF PROJECT P:\20109\109294 Pico Branch Library, Santa Monica\DWG\SHEET\109294C-1.40UT.dwg, Jan 20, 2012 - 2:11pm

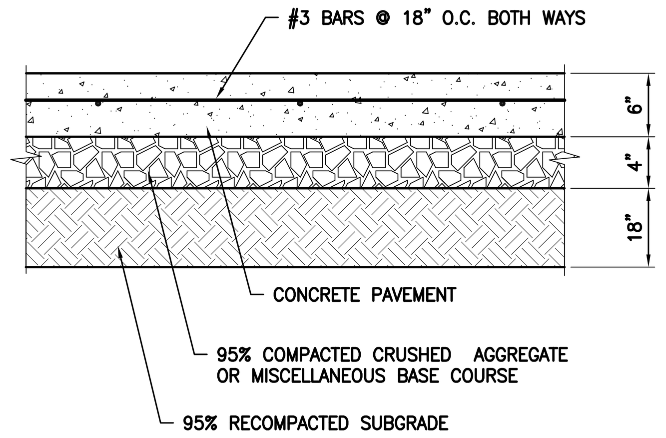

NOTES:

1. PAVEMENT SECTIONS ARE BASED ON RECOMMENDATIONS FROM THE PROJECT GEOTECHNICAL REPORT.
2. REFER TO LANDSCAPE PLANS FOR CONCRETE COLOR, PATTERN, TEXTURE, AND FINISH.
3. SEE PLAN FOR LOCATION OF CONTROL JOINTS.

10 REINFORCED CONCRETE PAVEMENT — N.T.S.

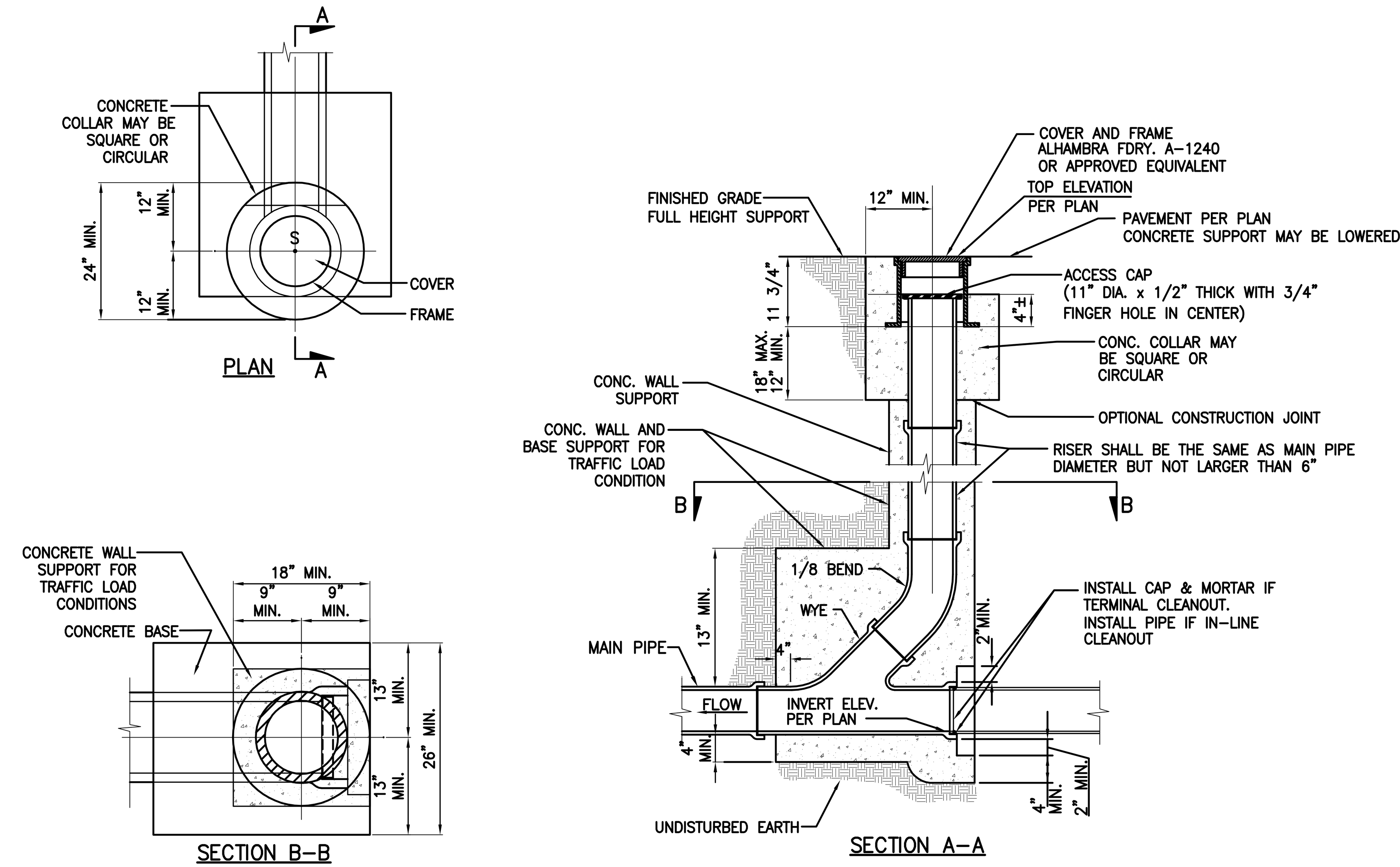

NOTES

1. SEE PROJECT PLANS FOR INVERT ELEVATION.
2. PIPE AND FITTINGS, EXCEPT AS OTHERWISE SHOWN ON HEREON, SHALL BE OF THE SAME MATERIAL AS THE SEWER, UNLESS APPROVED ADAPTERS ARE UTILIZED AND MAY BE ANY OF THE FOLLOWING:
   A. VC PIPE
   B. PE PIPE
   C. ABS SOLID PIPE
   D. ABS COMPOSITE PIPE
   E. PVC PLASTIC PIPE
3. PIPES AND FITTINGS SHALL BE PROPERLY ALIGNED AND MAINTAINED WHILE CONCRETE IS BEING PLACED AND ALLOWED TO HARDEN. JOINTS FOR PIPES AND FITTINGS SHALL BE MADE PRIOR TO PLACING CONCRETE. CONCRETE FOR BEDDING, ENCASEMENT, AND WALL SUPPORT FOR PIPES AND FITTINGS SHALL BE PLACED UNIFORMLY AROUND THE PIPE AND FITTINGS AS SHOWN HEREON TO MAINTAIN PROPER ALIGNMENT.
4. THE ACCESS FRAME, COVER AND CAP SHALL BE CAST IRON. THE FINGER HOLES MAY BE DRILLED OUT OR MAY BE BLOCKED OUT PRIOR TO CASTING; THEY SHALL NOT BE PUNCHED OUT.
5. THE CONTRACTOR, AT HIS OPTION, MAY PLACE EITHER CIRCULAR OR SQUARE CONCRETE PIPE WALL SUPPORTS AS SHOWN HEREON.

6 STANDARD CLEANOUT — N.T.S.

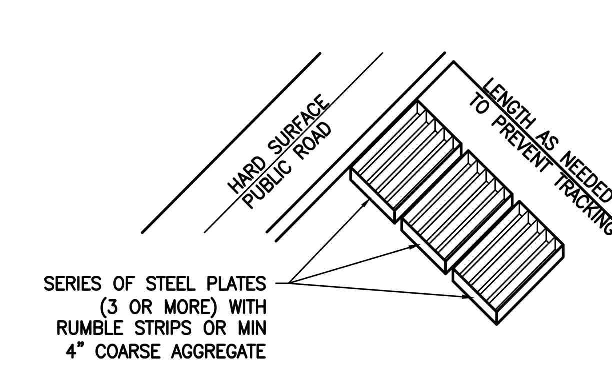

NOTES:

1. THE CONSTRUCTION ENTRANCE ROADWAYS SHALL BE STABILIZED SO AS TO PREVENT SEDIMENTS FROM BEING DEPOSITED INTO THE PUBLIC ROADS. DEPOSITIONS MUST BE SWEPT UP IMMEDIATELY AND MAY NOT BE WASHED DOWN BY RAIN OR OTHER MEANS INTO THE STORM DRAIN SYSTEM.
2. STABILIZED CONSTRUCTION ENTRANCE SHALL BE:
   A. LOCATED AT ANY POINT WHERE TRAFFIC WILL BE ENTERING OR LEAVING A CONSTRUCTION SITE OR FROM A PUBLIC RIGHT OF WAY, STREET, ALLEY, AND SIDEWALK OR PARKING AREA.
   B. SERIES OF STEEL PLATES WITH "RUMBLE STRIPS", AND/OR MIN 4" COARSE AGGREGATE WITH LENGTH, WIDTH AND THICKNESS AS NEEDED TO ADEQUATELY PREVENT ANY TRACKING ONTO PAVED SURFACE.
3. ADD A WASH RACK WITH SEDIMENT TRAP LARGE ENOUGH TO COLLECT ALL WASH WATER.
4. ALL VEHICLES ACCESSING THE CONSTRUCTION SITE SHALL UTILIZE THE STABILIZED CONSTRUCTION ENTRANCE SITES.

STREET MAINTENANCE:

1. REMOVE ALL SEDIMENT DEPOSITED ON PAVED ROADWAYS IMMEDIATELY.
2. SWEEP PAVED AREAS THAT RECEIVE CONSTRUCTION TRAFFIC WHENEVER SEDIMENT BECOMES VISIBLE.
3. PAVEMENT WASHING WITH WATER IS PROHIBITED IF IT RESULTS IN A DISCHARGE TO THE STORM DRAIN SYSTEM.

3 STABILIZED CONSTRUCTION ENTRANCE — N.T.S.

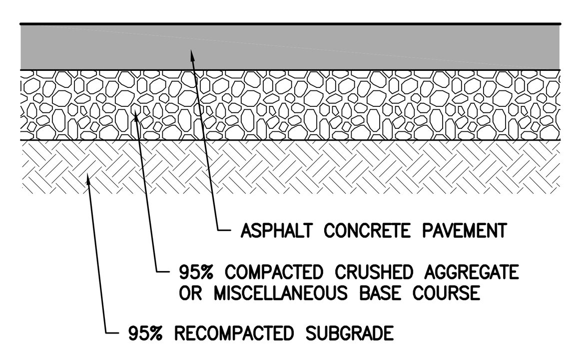

A.C. PAVEMENT TYPE	ASPHALT CONCRETE (INCHES)	BASE COURSE (INCHES)	RECOMPACTED SUBGRADE (INCHES)
VEHICULAR PARKING	3"	4"	18"
HEAVY TRUCK TRAFFIC	4"	4"	18"

NOTE:
1. PAVEMENT SECTIONS ARE BASED ON RECOMMENDATIONS FROM THE PROJECT GEOTECHNICAL REPORT.

9 ASPHALT PAVEMENT SECTION — N.T.S.

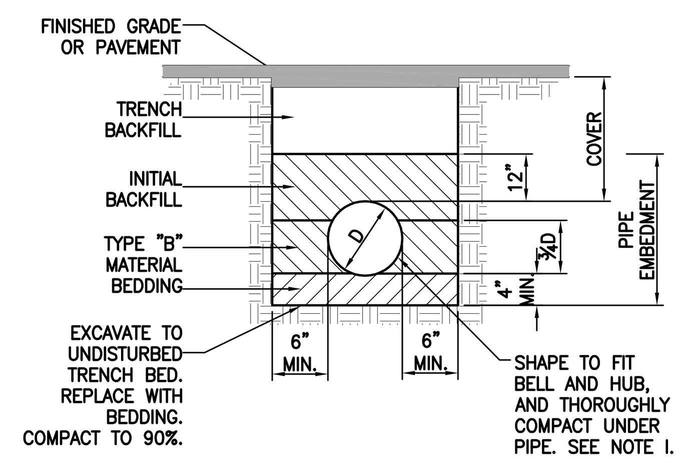

PIPE	FOR GRAVITY FLOW SAN. SEWERS AND DRAINAGE P.V.C. CONFORMING TO A.S.T.M. D–3034 MAXIMUM SDR 35, GASKETED JOINTS FOR 4" TO 15" DIA PIPE AND ASTM F–679 FOR 18" DIA AND LARGER.
BEDDING	CLEAN COARSE SAND.
INITIAL BACKFILL	NATIVE MATERIAL – MAXIMUM SIZE NOT TO EXCEED 1 1/2".
TRENCH BACKFILL:	NATIVE MATERIAL – 90% COMPACTION MIN. (95% COMPACTION IN UPPER 3.0' OF PAVED AREAS). UP TO CLASS IV SOILS, TYPE ML,CL. FINE GRAINED, LL<50, MEDIUM TO NO PLASTICITY. NOTE, IF CLASS IV SOIL, TYPE MH OR ALL CLASS V SOILS THEN USE CLEAN COURSE SAND.
CLEAN COURSE SAND	SHALL CONFORM TO THE REQUIREMENTS OF SAND FOR PORTLAND CEMENT CONCRETE AS SPECIFIED IN SECTION 200–1.5.5 OF THE STANDARD SPECIFICATIONS FOR PUBLIC WORKS CONSTRUCTION, LATEST EDITION.
TYPE "B" MATERIAL	SHALL BE ONE OF THE FOLLOWING: 1. NATIVE FREE DRAINING MATERIAL OR CRUSHED ROCK CONFORMING TO SUBSECTION 200–1.2 OF THE "STANDARD SPECIFICATIONS FOR PUBLIC WORKS CONSTRUCTION" WITH 1/2" MAXIMUM ROCK GRADATION. 2. CLEAN COARSE SAND.

NOTES:

1. EXCAVATE FOR BELLS OR HUBS SO FULL LOAD IS CARRIED BY PIPE BARRELS.
2. TYPE "B" MATERIAL SHALL BE PLACED IN A MANNER SUCH AS SLICING SHOVEL–SPADING, OR SHOVEL RODDING TO INSURE COMPLETE FILLING OF THE "HAUNCH AREAS" BELOW THE PIPE. (JETTING OF TYPE "B" MATERIAL IS NOT AUTHORIZED UNLESS PREVIOUSLY APPROVED).
3. TRENCH BACKFILL SHALL BE COMPACTED IN ACCORDANCE WITH SECTION 306–1.3 OF THE STANDARD SPECIFICATIONS FOR PUBLIC WORKS CONSTRUCTION, LATEST EDITION. WATER DENSIFIED BACKFILL SHALL NOT BE USED.

8 FLEXIBLE PIPE BEDDING DETAIL (FOR SDR–35 PIPE ONLY) — N.T.S.

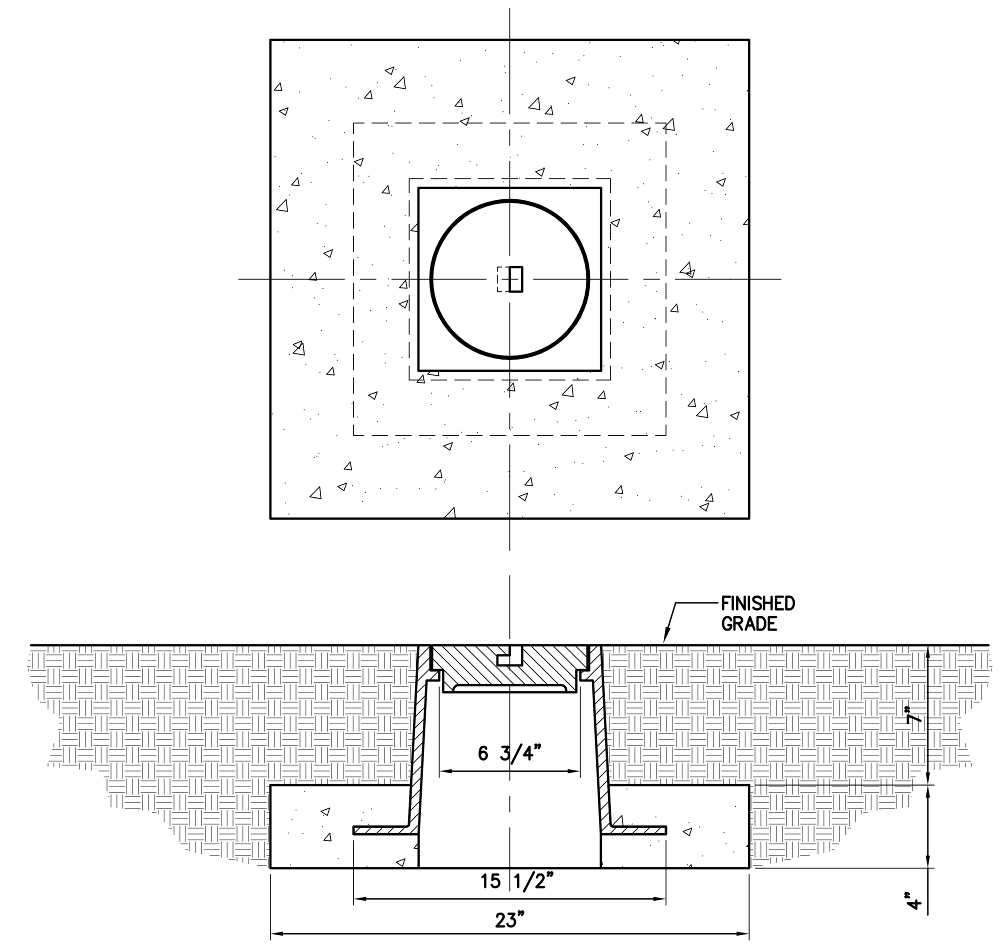

CLEAR OPENING 6 3/4", OVERALL FRAME BASE 15 1/2" X 15 1/2"
FRAME HEIGHT 9"
BITUMINOUS PAINT

ALHAMBRA FOUNDRY PRODUCT A–2922

5 TEST STATION MARKER AT INFILTRATION TRENCH — N.T.S.

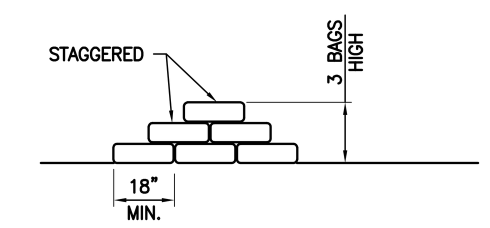

NOTES:

1. SANDBAG SHALL BE FILLED WITH NON–COHESIVE, CLASS 1 OR CLASS 2, PERMEABLE MATERIAL FREE FROM CLAY AND DELETERIOUS MATERIAL.

2 SANDBAG BARRIER — N.T.S.

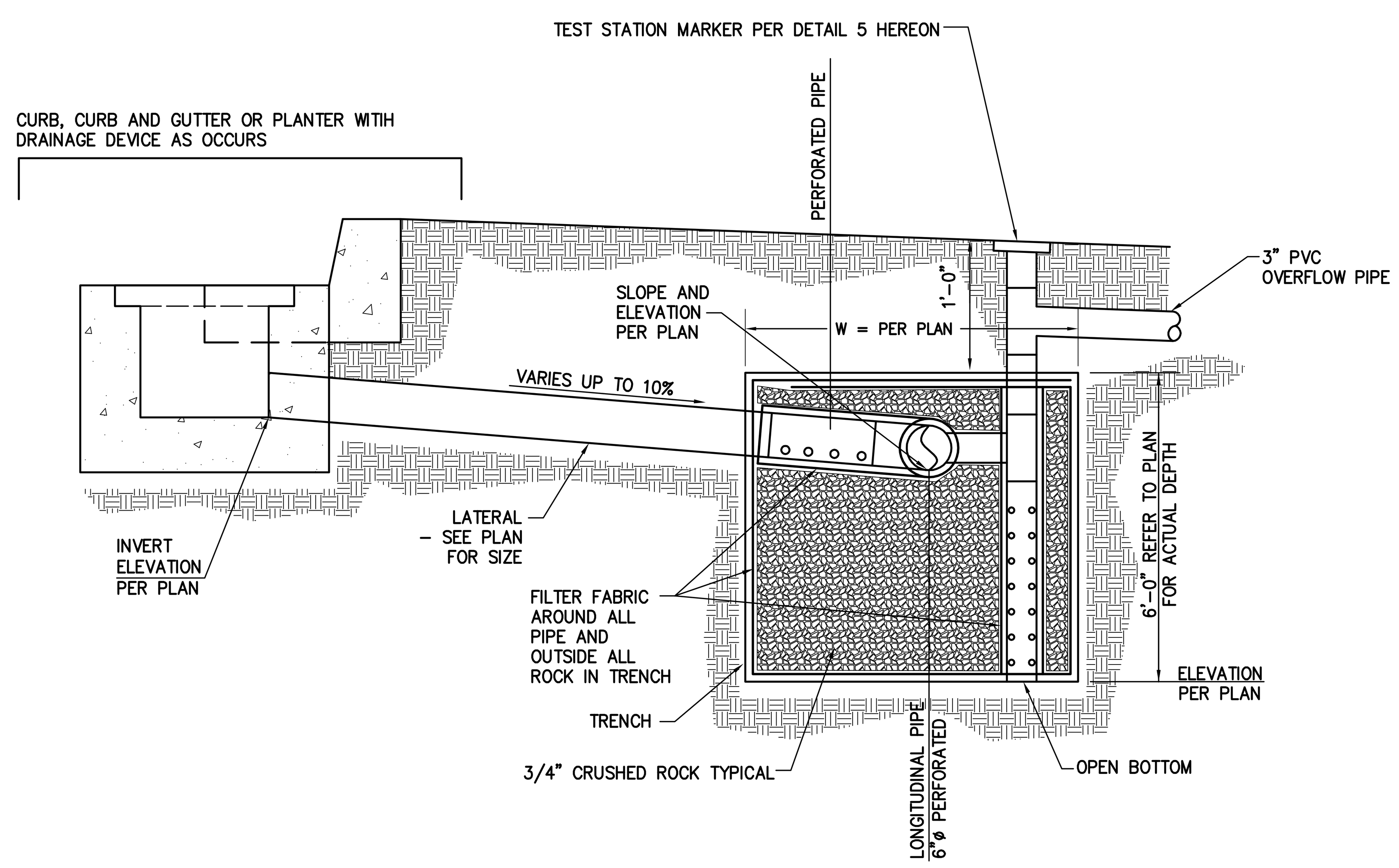

7 INFILTRATION TRENCH CROSS SECTION — N.T.S.

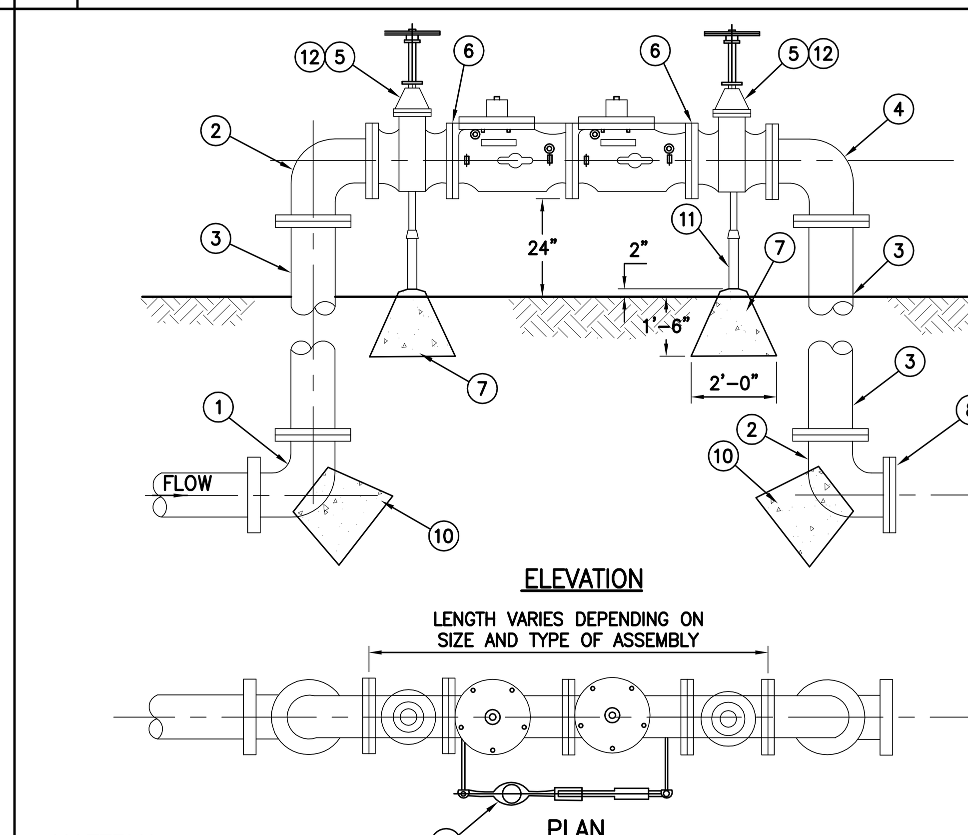

MATERIAL

1. 90° D.I. ELL x PUSH–ON
2. 90° D.I. ELL FLG x FLG
3. D.I. (CL) SPOOL FLG x FLG
4. 90° D.I. (CL) ELL FLG x FLG
5. U.S.C.–APPROVED SHUT–OFF VALVES. SEE SPECIFICATIONS
6. APPROVED DOUBLE CHECK VALVES (SIZE PER PLAN)
7. CONCRETE FOOTING
8. TEMPORARY D.I. BLIND FLANGE, AS REQUIRED
9. BY–PASS METER ASSEMBLY
10. THRUST BLOCK
11. GALVANIZED ADJUSTABLE PIPE SUPPORT, PER MANUFACTURER'S RECOMMENDATION
12. TAMPER SWITCH WIRED TO FIRE ALARM CONTROL PANEL, WHEN APPLICABLE

NOTES

1. INSTALLATION SHALL COMPLY WITH THE LATEST PLUMBING CODES AND APPLICABLE LOCAL AGENCY REQUIREMENTS.
2. THRUST BLOCKS SHALL BE SIZED PER DETAIL 7 ON C5.01.

4 TYPICAL DOUBLE DETECTOR CHECK VALVE ASSEMBLY — N.T.S.

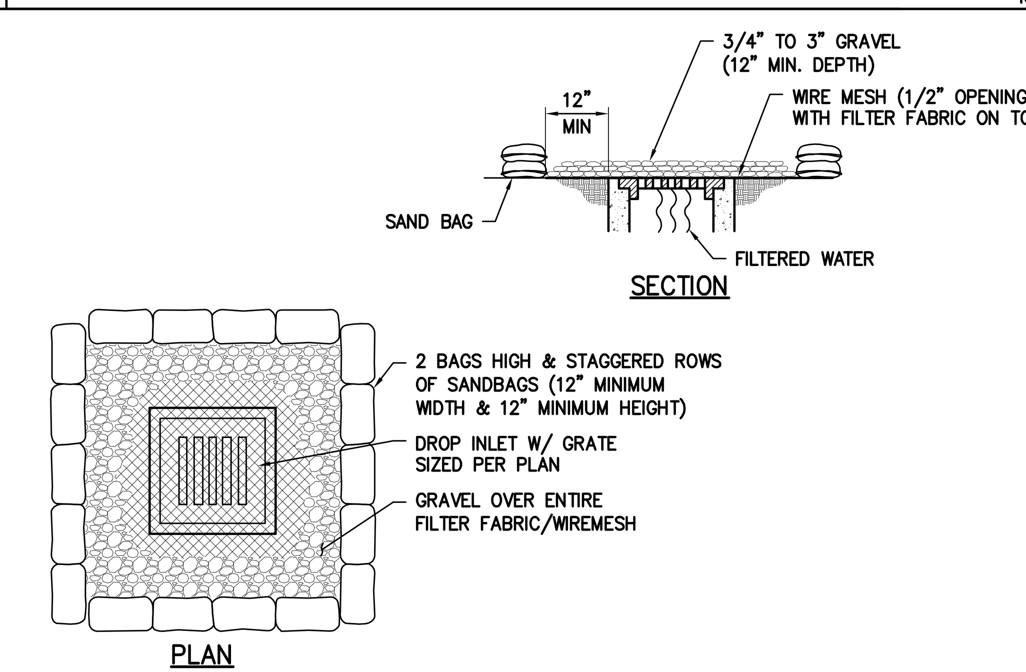

NOTES:

1. PLACE WIRE MESH OVER AND 1' (MINIMUM) BEYOND THE INLET STRUCTURE. (MESH OPENINGS NOT TO EXCEED 1/2" x 1/2" WIRE)
2. PLACE FILTER FABRIC OVER WIRE MESH.
3. PLACE 3/4" TO 3" GRAVEL OVER THE FILTER FABRIC/WIRE MESH (12" MINIMUM DEPTH OVER THE ENTIRE INLET OPENING).
4. SAND BAG MATERIAL: POLYPROPYLENE, POLYETHYLENE OR POLYMIDE WOVEN FABRIC, MINIMUM UNIT WEIGHT 4 OUNCES PER SQUARE YARD, MULLEN BURST STRENGTH EXCEEDING 300 PSI AND ULTRAVIOLET STABILITY EXCEEDING 70%.
5. SAND BAG SHALL BE FILLED WITH NON–COHESIVE, CLASS 1 OR CLASS 2 PERMEABLE MATERIAL FREE FROM CLAY AND DELETERIOUS MATERIAL.
6. PLACE SEVERAL LAYERS OF SAND BAGS (12" MINIMUM HIGH) OVERLAPPING THE BAGS AND PACKING THEM TIGHTLY TOGETHER.
7. LEAVE GAP OF ONE BAG ON THE TOP ROW TO SERVE AS A SPILLWAY.

1 STORM DRAIN INLET PROTECTION — N.T.S.

PICO BRANCH LIBRARY
2201 Pico Blvd.
Santa Monica, CA 90404

PROJECT

KoningEizenbergArchitecture
1454 25th St, Santa Monica, CA 90404
310.828.6131 info@kearch.com
310.828.0719 fax www.kearch.com

ARCHITECT'S PROJECT NO.
1001

ARCHITECT

All designs, ideas, arrangements and plans indicated by these drawings are the property and copyright of the Architect and shall neither be used on any other work nor be disclosed to any other person for any use whatsoever without written permission.

Koning Eizenberg Architecture and/or its principals and employees waives any and all liability or responsibility for problems that may occur when these plans, drawings, specifications, and/or designs are followed without the professional's guidance with ambiguities, or conflicts which are alleged.

REGISTERED PROFESSIONAL ENGINEER JEFFREY B. GAVAZZA No. C59894 Exp. 12/31/11 CIVIL STATE OF CALIFORNIA
NOT FOR CONSTRUCTION

kpff Consulting Engineers
6080 Center Dr. Suite 700
Los Angeles, California 90045
(310) 665-2800 Fax (310) 665-9075

CONSULTANT

City of Santa Monica Architecture Services
1437 4TH STREET, SUITE 300
SANTA MONICA, CA 90401
TEL. (310) 458-2205
FAX. (310) 399-1541
architecture@smgov.net

DATE : ______ 20 __
SUBMITTED BY :

DATE : ______ 20 __
APPROVED BY :
Miriam Mulder,
Architecture Services Manager
CITY OF SANTA MONICA
DEPARTMENT OF PUBLIC WORKS

REVIEWED BY : DATE : ______ 20 __

REVIEWED BY : DATE : ______ 20 __

REVIEWED BY : DATE : ______ 20 __

CITY CLIENT

NO.	DATE	BY	DESCRIPTION

REVISIONS

ISSUE
65% CONSTRUCTION DOCUMENTS / BID SET
DATE
01/23/2012
DRAWING NO. 6693
SHEET OF SHEETS
SHEET TITLE
Details

SHEET NO.
C5.00

SHEET OF
DWG. NO.: -
TITLE OF PROJECT : P:\2009\109294 Pico Branch Library, Santa Monica\DWG\SHEET\109294C-5.00DT.dwg, Jan 20, 2012 - 2:10pm

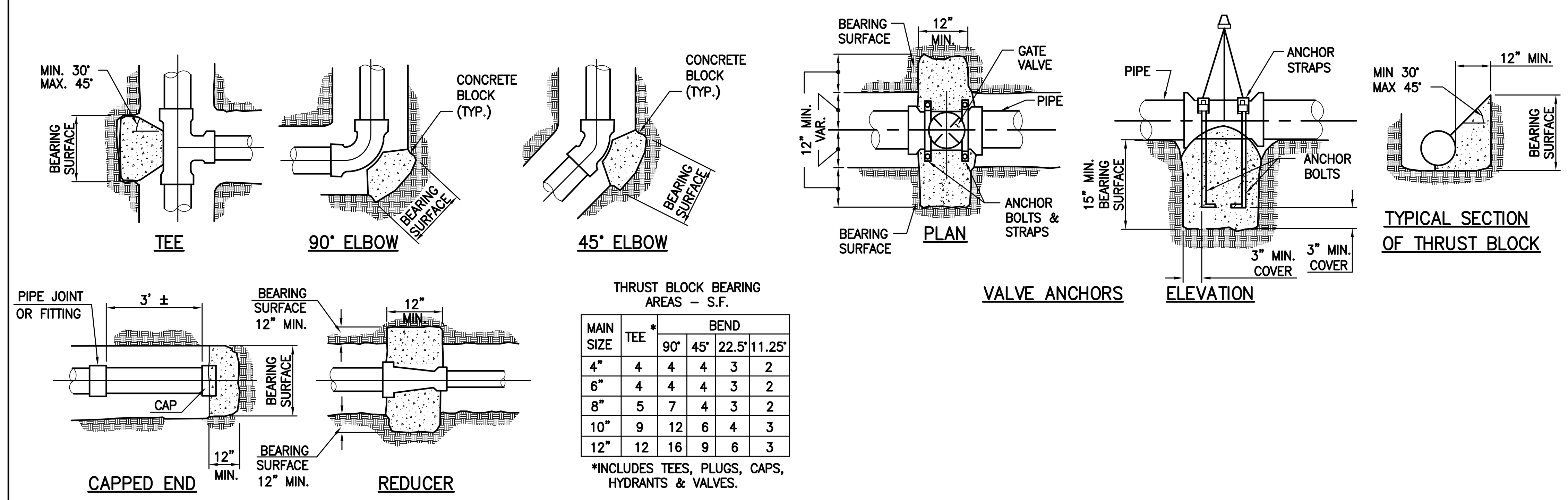

THRUST BLOCK BEARING AREAS – S.F.

MAIN SIZE	TEE *	BEND 90°	BEND 45°	BEND 22.5°	BEND 11.25°
4"	4	4	4	3	2
6"	4	4	4	3	2
8"	5	7	4	3	2
10"	9	12	6	4	3
12"	12	16	9	6	3

*INCLUDES TEES, PLUGS, CAPS, HYDRANTS & VALVES.

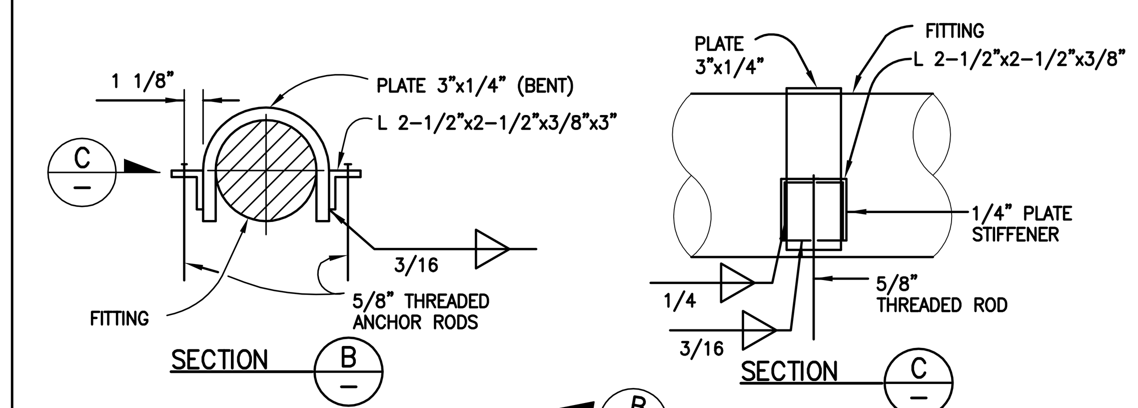

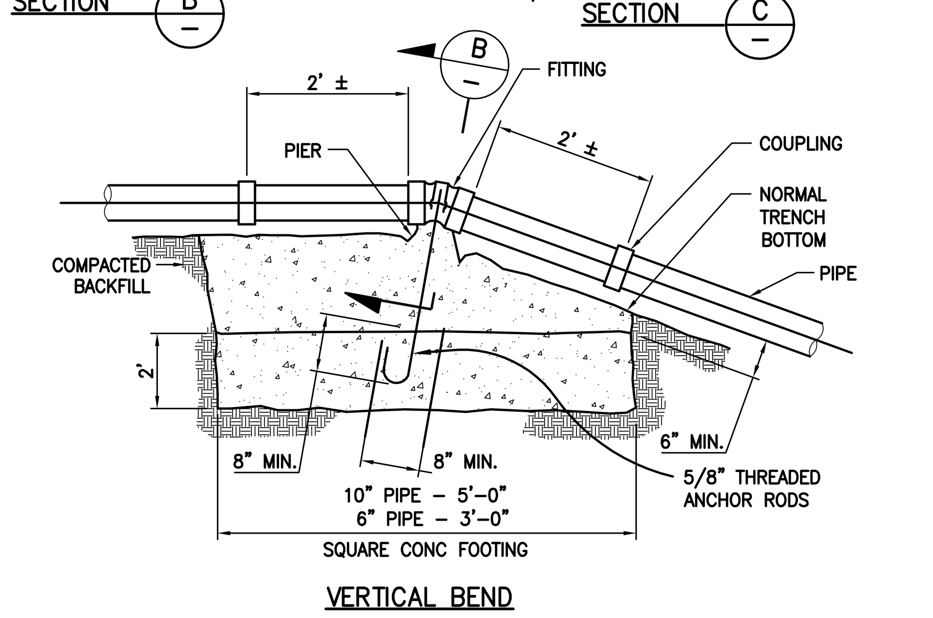

GENERAL NOTES:

1. ALL THRUST/ANCHOR BLOCKS SHALL BEAR AGAINST UNDISTURBED SOIL.
2. CONCRETE SHALL ATTAIN A MINIMUM COMPRESSIVE STRENGTH OF 2000 PSI.
3. ALL ANCHOR RODS AND ANCHOR BOLTS SHALL BE MINIMUM 5/8" DIA. & ANCHOR STRAPS SHALL BE 3"X1/4".
4. THRUST BLOCK DESIGN IS BASED ON A WATER PRESSURE OF 150 P.S.I., AND A MINIMUM ALLOWABLE SOIL BEARING VALUE OF 2000 P.S.F. THE CONTRACTOR SHALL BE RESPONSIBLE FOR VERIFYING SOIL BEARING VALUES AND THE POSITION AND SIZE OF BEARING AREAS, BASED UPON N.F.P.A. 24.
5. THE RATIO OF WIDTH TO HEIGHT OF THRUST BLOCKS SHALL NOT EXCEED 1.5 TO 1.

7 THRUST AND ANCHOR BLOCK DETAILS N.T.S.

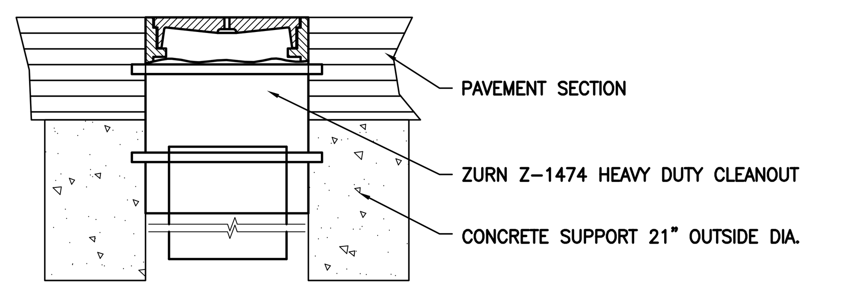

HEAVY DUTY – TRAFFIC APPLICATION

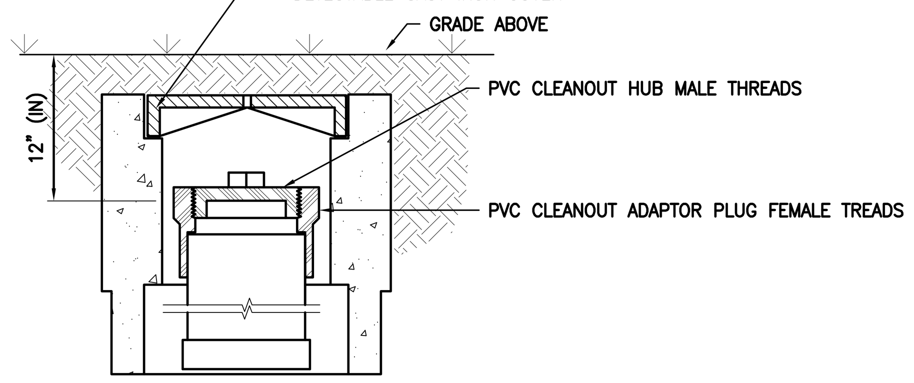

BURIED IN GROUND APPLICATION

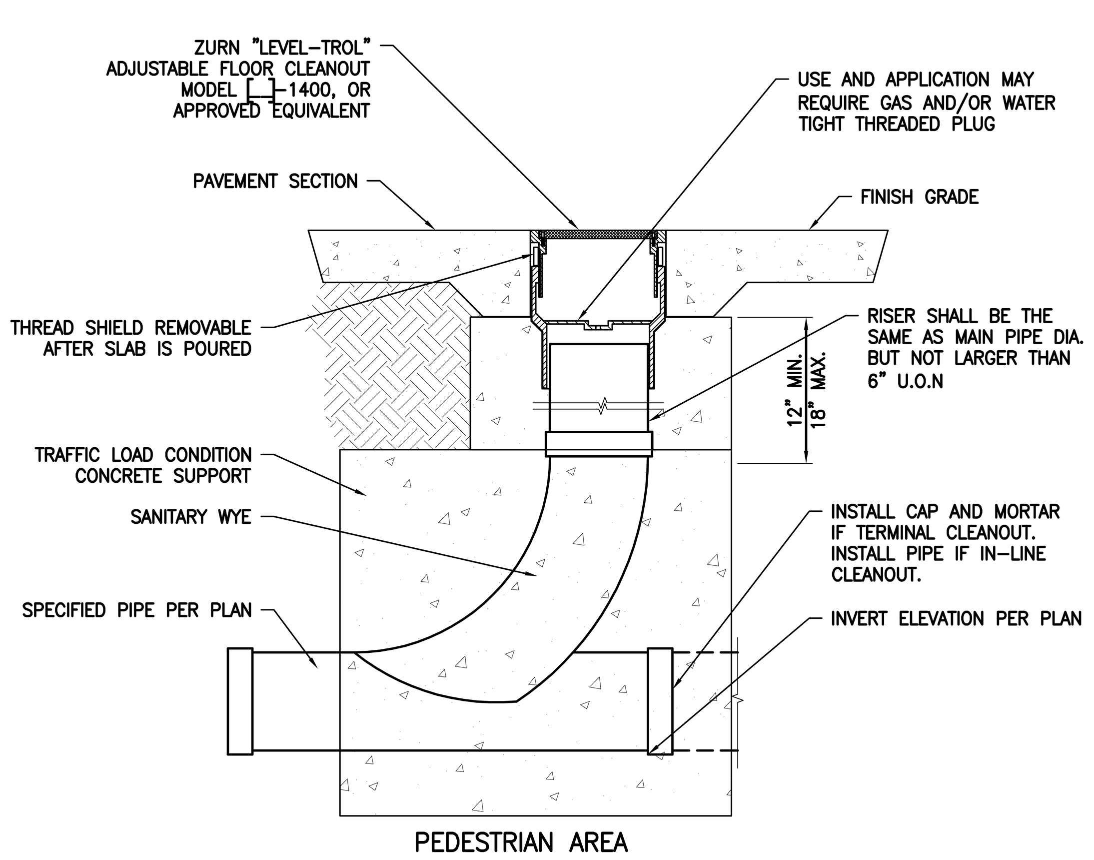

PEDESTRIAN AREA APPLICATION

REFER TO APWA STD. PLAN NO. 204-0 WHEN INVERT DEPTH IS GREATER THAN 38"(IN.) BELOW THE SURFACE

6 CLEANOUT SHALLOW DEPTH-38" OR LESS N.T.S.

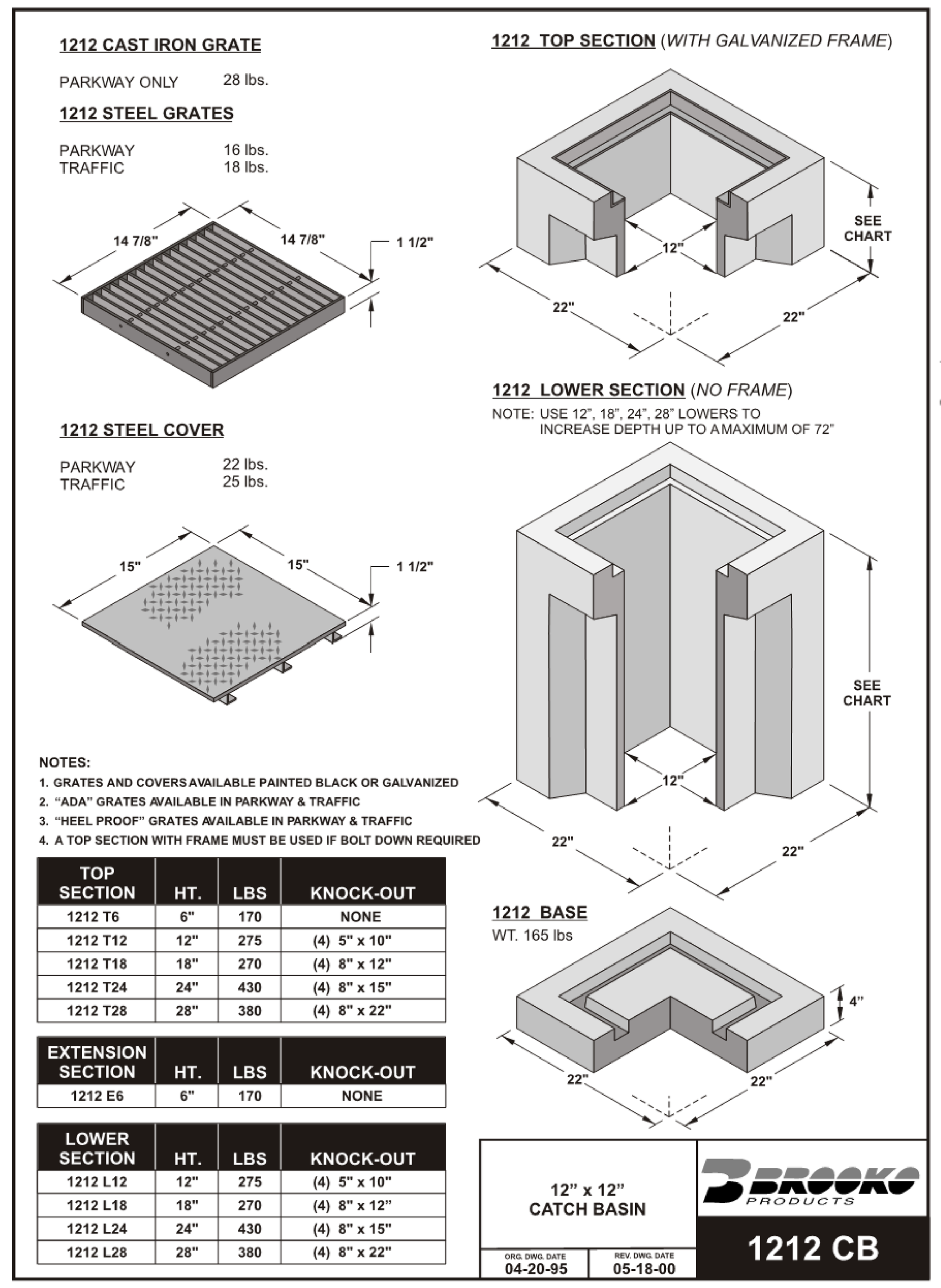

1212 CAST IRON GRATE

PARKWAY ONLY 28 lbs.

1212 STEEL GRATES

PARKWAY 16 lbs.
TRAFFIC 18 lbs.

1212 STEEL COVER

PARKWAY 22 lbs.
TRAFFIC 25 lbs.

1212 TOP SECTION (*WITH GALVANIZED FRAME*)

1212 LOWER SECTION (*NO FRAME*)

NOTE: USE 12", 18", 24", 28" LOWERS TO INCREASE DEPTH UP TO A MAXIMUM OF 72"

1212 BASE
WT. 165 lbs

NOTES:
1. GRATES AND COVERS AVAILABLE PAINTED BLACK OR GALVANIZED
2. "ADA" GRATES AVAILABLE IN PARKWAY & TRAFFIC
3. "HEEL PROOF" GRATES AVAILABLE IN PARKWAY & TRAFFIC
4. A TOP SECTION WITH FRAME MUST BE USED IF BOLT DOWN REQUIRED

TOP SECTION	HT.	LBS	KNOCK-OUT
1212 T6	6"	170	NONE
1212 T12	12"	275	(4) 5" x 10"
1212 T18	18"	270	(4) 8" x 12"
1212 T24	24"	430	(4) 8" x 15"
1212 T28	28"	380	(4) 8" x 22"

EXTENSION SECTION	HT.	LBS	KNOCK-OUT
1212 E6	6"	170	NONE

LOWER SECTION	HT.	LBS	KNOCK-OUT
1212 L12	12"	275	(4) 5" x 10"
1212 L18	18"	270	(4) 8" x 12"
1212 L24	24"	430	(4) 8" x 15"
1212 L28	28"	380	(4) 8" x 22"

12" x 12" CATCH BASIN
ORG. DWG. DATE 04-20-95 REV. DWG. DATE 05-18-00
BROOKS PRODUCTS
1212 CB

7-01

5 12" X 12" CATCH BASIN N.T.S.

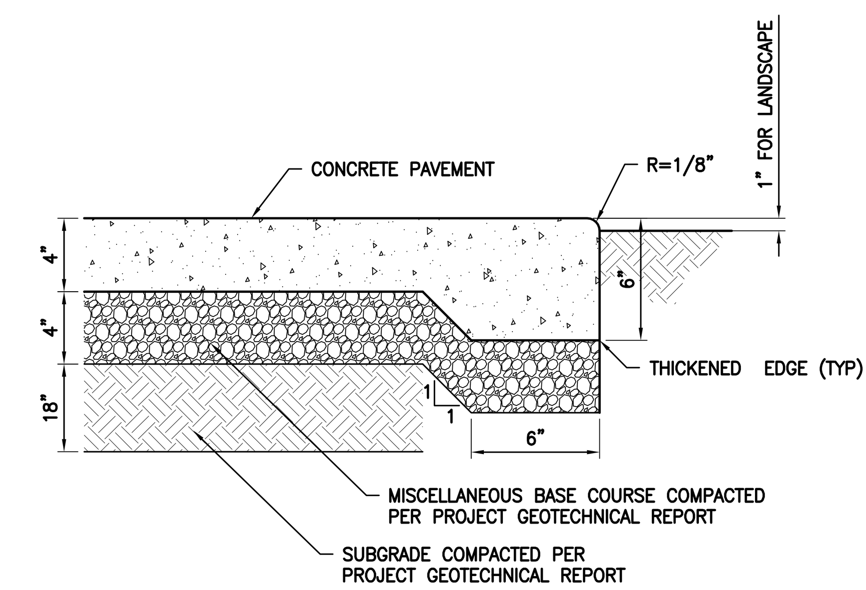

NOTES:

1. ALL TREAD SURFACES SHALL BE SLIP-RESISTANT.
2. REFER TO LANDSCAPE DRAWINGS FOR COLOR, PATTERN, TEXTURE, AND FINISH.
3. SEE LANDSCAPE DRAWINGS FOR LOCATION OF CONTROL JOINTS.

4 CONCRETE WALK SECTION N.T.S.

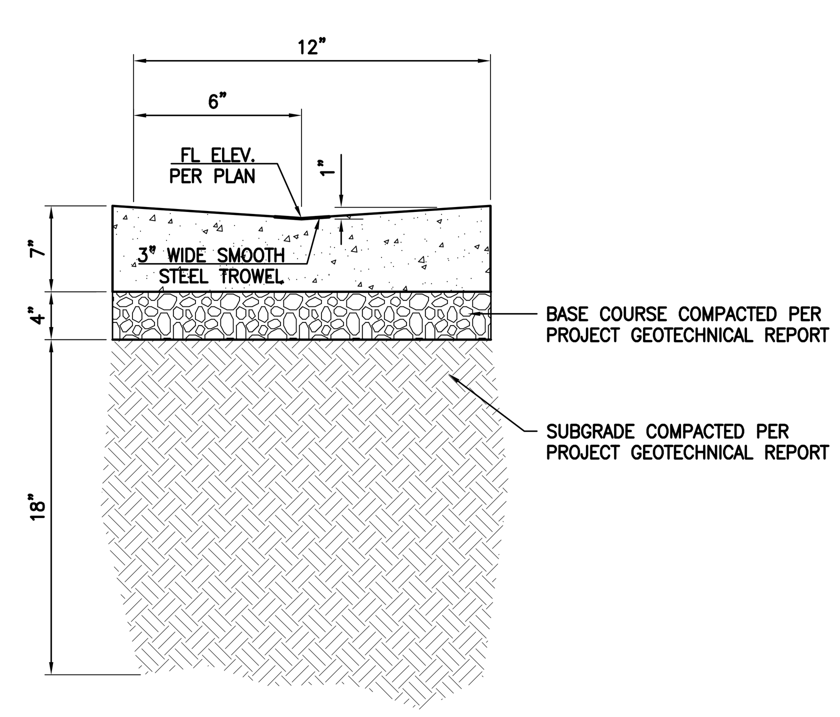

NOTES:

1. ISOLATION JOINTS SHALL BE PLACED ONLY AS SPECIFIED.
2. CONTROL JOINTS CONSISTING OF 1" DEEP SCORES SHALL BE PLACED AT 10' INTERVALS O.C.

3 CONCRETE VALLEY GUTTER N.T.S.

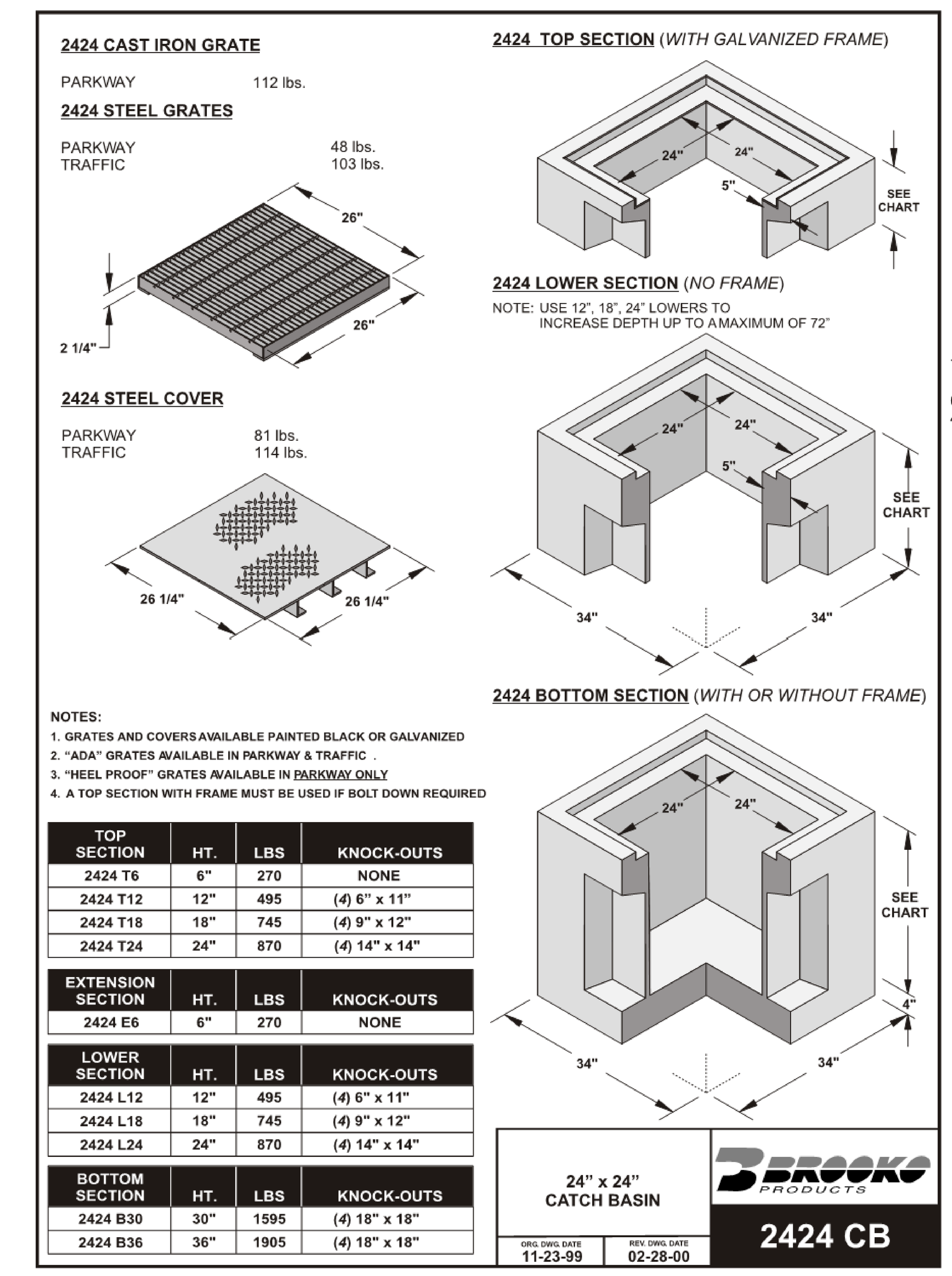

2424 CAST IRON GRATE

PARKWAY 112 lbs.

2424 STEEL GRATES

PARKWAY 48 lbs.
TRAFFIC 103 lbs.

2424 STEEL COVER

PARKWAY 81 lbs.
TRAFFIC 114 lbs.

2424 TOP SECTION (*WITH GALVANIZED FRAME*)

2424 LOWER SECTION (*NO FRAME*)

NOTE: USE 12", 18", 24" LOWERS TO INCREASE DEPTH UP TO A MAXIMUM OF 72"

2424 BOTTOM SECTION (*WITH OR WITHOUT FRAME*)

NOTES:
1. GRATES AND COVERS AVAILABLE PAINTED BLACK OR GALVANIZED
2. "ADA" GRATES AVAILABLE IN PARKWAY & TRAFFIC .
3. "HEEL PROOF" GRATES AVAILABLE IN PARKWAY ONLY
4. A TOP SECTION WITH FRAME MUST BE USED IF BOLT DOWN REQUIRED

TOP SECTION	HT.	LBS	KNOCK-OUTS
2424 T6	6"	270	NONE
2424 T12	12"	495	(4) 6" x 11"
2424 T18	18"	745	(4) 9" x 12"
2424 T24	24"	870	(4) 14" x 14"

EXTENSION SECTION	HT.	LBS	KNOCK-OUTS
2424 E6	6"	270	NONE

LOWER SECTION	HT.	LBS	KNOCK-OUTS
2424 L12	12"	495	(4) 6" x 11"
2424 L18	18"	745	(4) 9" x 12"
2424 L24	24"	870	(4) 14" x 14"

BOTTOM SECTION	HT.	LBS	KNOCK-OUTS
2424 B30	30"	1595	(4) 18" x 18"
2424 B36	36"	1905	(4) 18" x 18"

24" x 24" CATCH BASIN
ORG. DWG. DATE 11-23-99 REV. DWG. DATE 02-28-00
BROOKS PRODUCTS
2424 CB

7-04

2 24" X 24" CATCH BASIN N.T.S.

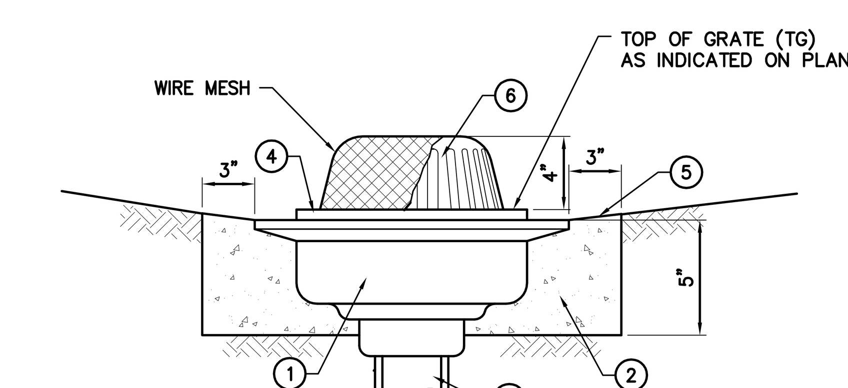

LEGEND:

1. GALVANIZED CAST IRON BODY AND GRATE AREA DRAIN.
2. 2,500 PSI PORTLAND CEMENT CONCRETE PAD (PAD MAY BE EITHER ROUND OR SQUARE IN PLAN VIEW).
3. OUTLET PIPE TO MATCH PIPE SIZE PER PLAN.
4. TOP OF DRAIN ELEVATION PER PLAN.
5. FINISH GRADE PER PLAN.
6. DOME TOP WHERE INDICATED ON PLAN (SEE TABLE BELOW)

SIZE	TYPE	ITEM DESCRIPTION	MODEL NO.	FREE AREA (SQ IN)
12" DIA.	DOME	ZURN PLUMBING PRODUCTS	Z121-VP-G	78
12" DIA.	DOME	JAY R. SMITH MFG. CO.	2675-G	53

1 PLANTER DRAIN DETAIL N.T.S.

PICO BRANCH LIBRARY

2201 Pico Blvd.
Santa Monica, CA 90404

PROJECT

KoningEizenberg Architecture
1454 25th St, Santa Monica, CA 90404
310.828.6131 info@kearch.com
310.828.0719 fax www.kearch.com

ARCHITECT'S PROJECT NO.
1001

ARCHITECT

All designs, ideas, arrangements and plans indicated by these drawings are the property and copyright of the Architect and shall neither be used on any other work nor be disclosed to any other person for any use whatsoever without written permission.

Koning Eizenberg Architecture and/or its principals and employees waives any and all liability or responsibility for problems that may occur when these plans, drawings, specifications, and/or designs are followed without the professional's guidance with ambiguities, or conflicts which are alleged.

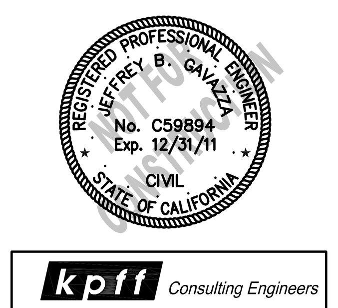

kpff Consulting Engineers
6080 Center Dr. Suite 700
Los Angeles, California 90045
(310) 665-2800 Fax (310) 665-9075

CONSULTANT

City of Santa Monica
Architecture Services
1437 4TH STREET, SUITE 300
SANTA MONICA, CA 90401
TEL. (310) 458-2205
FAX. (310) 399-1541
architecture@smgov.net

DATE : ____ 20 __
SUBMITTED BY :

DATE : ____ 20 __
APPROVED BY :
Miriam Mulder,
Architecture Services Manager
CITY OF SANTA MONICA
DEPARTMENT OF PUBLIC WORKS

REVIEWED BY : DATE : ____ 20 __

REVIEWED BY : DATE : ____ 20 __

REVIEWED BY : DATE : ____ 20 __

CITY CLIENT

NO.	DATE	BY	DESCRIPTION

REVISIONS

ISSUE
65% CONSTRUCTION DOCUMENTS / BID SET

DATE
01/23/2012

DRAWING NO. **6693**

SHEET OF SHEETS

SHEET TITLE
Details

SHEET NO.
C5.01

SHEET OF
DWG. NO.: -
TITLE OF PROJECT : P:\2009\109294 Pico Branch Library, Santa Monica\DWG\SHEET\109294C-5.01DT.dwg, Jan 20, 2012 - 2:12pm

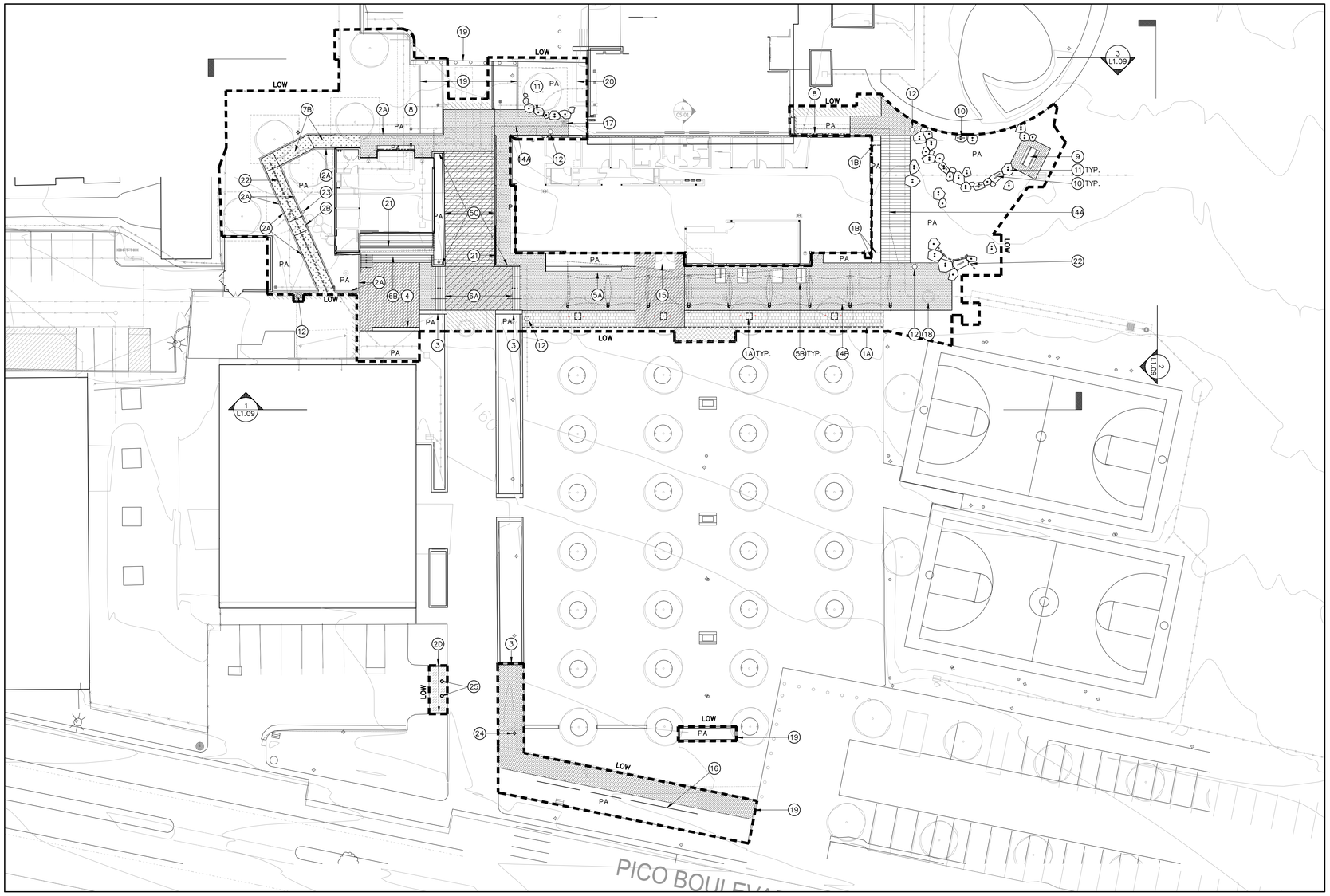

HARDSCAPE LEGEND

SYMBOL	ITEM	DETAIL
VEHICULAR / PEDESTRIAN	NOTES: CONCRETE PAVING TYPES 1,2 AND 3 SAW-CUT USE EXISTING SITE PAVING TO MATCH AS REFER	
	CONCRETE PAVING – TYPE 1	1+2 / L1.03
	CONCRETE PAVING – TYPE 2	1+2 / L1.03
	CONCRETE PAVING – TYPE 3	1+2 / L1.03
	CONCRETE PAVING – TYPE 4 PERMEABLE	5 / L1.03
	RESIN PAVEMENT	6 / L1.04
	EXISTING CONCRETE PAV. TO REMAIN	
	PERMEABLE PAVERS	3 / L1.03
	ASPHALT	
	FLAGSTONE PAVERS	7 / L1.03
EJ	SAW CUT SCORE LINE (TYP)	2 / L1.03
	EXPANSION JOINT (TYP)	2 / L1.03
HEADERS/WALLS/STAIRS/RAILINGS		
	1A METAL PAVER EDGE RESTRAINT TYPE 1	3 / L1.03
	1B METAL EDGING, TYPE 2	4 / L1.03
	2A RAISED CURB, TYPE	6 / L1.03
	2B MOW CURB	1 / L1.04
	3 CHEEK WALL	2 / L1.05
	4 SEAT WALL, TYPE 1	2+4 / L1.04
	5A SEAT WALL WITH WOOD BENCH, TYPE 2	5 / L1.04
	5B SEAT WALL WITH WOOD BENCH, TYPE 3	4 / L1.05
	5C RETAINING WALL	3 / L1.04
	6A CONCRETE STEPS WITH HANDRAILS	5 / L1.06
	6B TERRACED AMPHITHEATER AND STEPS	
	7A RAMP WITH HANDRAIL	5 / L1.06
	7B SLOPED WALK	
SITE FURNISHINGS		
	8 VINE CABLE SYSTEM	1 / L1.07
	9 PICNIC TABLES	1 / L1.05
	10 BENCH	3 / L1.05
	11 BOULDERS: LARGE BOULDER, MEDIUM BOULDER, SMALL BOULDER	1–4 / L1.06
	12 TRASH	
OTHER		
	13 SKATEBOARD DETERRENT	4 / L1.04
	14A BUILDING CANOPY	
	14B PLAZA SHADE STRUCTURE	
	15 DOOR MAT	
	16 LIBRARY MONUMENT SIGN	
	17 CATCH BASIN	
	18 CDS UNIT	
	19 EXISTING CURB TO REMAIN	
	20 EXISTING PLANTER TO REMAIN	
	21 GUARDRAIL OR HANDRAIL	
	22 PERFORATED PIPE	
	23 EXISTING LIGHT TO REMAIN	
	24 RELOCATED LIGHT	
	25 RELOCATED BOLLARDS	
	TREE PROTECTION ZONE (TPZ)	
	LIMIT OF WORK	
PA	PLANTING AREA	

20' 10' 0' 20'
15' 5'

N

PICO BRANCH LIBRARY

Virginia Avenue Park
Santa Monica, CA 90404

PROJECT

KoningEizenbergArchitecture
1454 25th St, Santa Monica, CA 90404
310.828.6131 info@kearch.com
310.828.0719 fax www.kearch.com

ARCHITECT'S PROJECT NO.
1001

ARCHITECT

All designs, ideas, arrangements and plans indicated by these drawings are the property and copyright of the Architect and shall neither be used on any other work nor be disclosed to any other person for any use whatsoever without written permission.

Koning Eizenberg Architecture and/or its principals and employees waives any and all liability or responsibility for problems that may occur when these plans, drawings, specifications, and/or designs are followed without the professional's guidance with ambiguities, or conflicts which are alleged.

SPURLOCK POIRIER
Landscape Architects
2102 Hancock Street
San Diego, CA 92110
619.681.0090
619.681.0096 fax

LICENSED LANDSCAPE ARCHITECT
ANDREW SPURLOCK 1983
Signature
07/31/12
Renewal Date
Date
STATE OF CALIFORNIA

CONSULTANT

City of Santa Monica
Architecture Services
1437 4TH STREET, SUITE 300
SANTA MONICA, CA 90401
TEL. (310) 458-2205
FAX. (310) 399-1541
architecture@smgov.net

SUBMITTED BY : DATE : 20

APPROVED BY : DATE : 20
Miriam Mulder,
Architecture Services Manager
CITY OF SANTA MONICA
DEPARTMENT OF PUBLIC WORKS

REVIEWED BY : DATE : 20

REVIEWED BY : DATE : 20

REVIEWED BY : DATE : 20

CITY CLIENT

NO.	DATE	BY	DESCRIPTION

REVISIONS

ISSUE
65% CONSTRUCTION DOCUMENTS / BID SET

DATE
01/23/2012

DRAWING NO. **6693**

SHEET OF SHEETS

SHEET TITLE
Hardscape Plan

SHEET NO.
L1.01A

SHEET OF
DWG. NO. -
TITLE OF PROJECT :

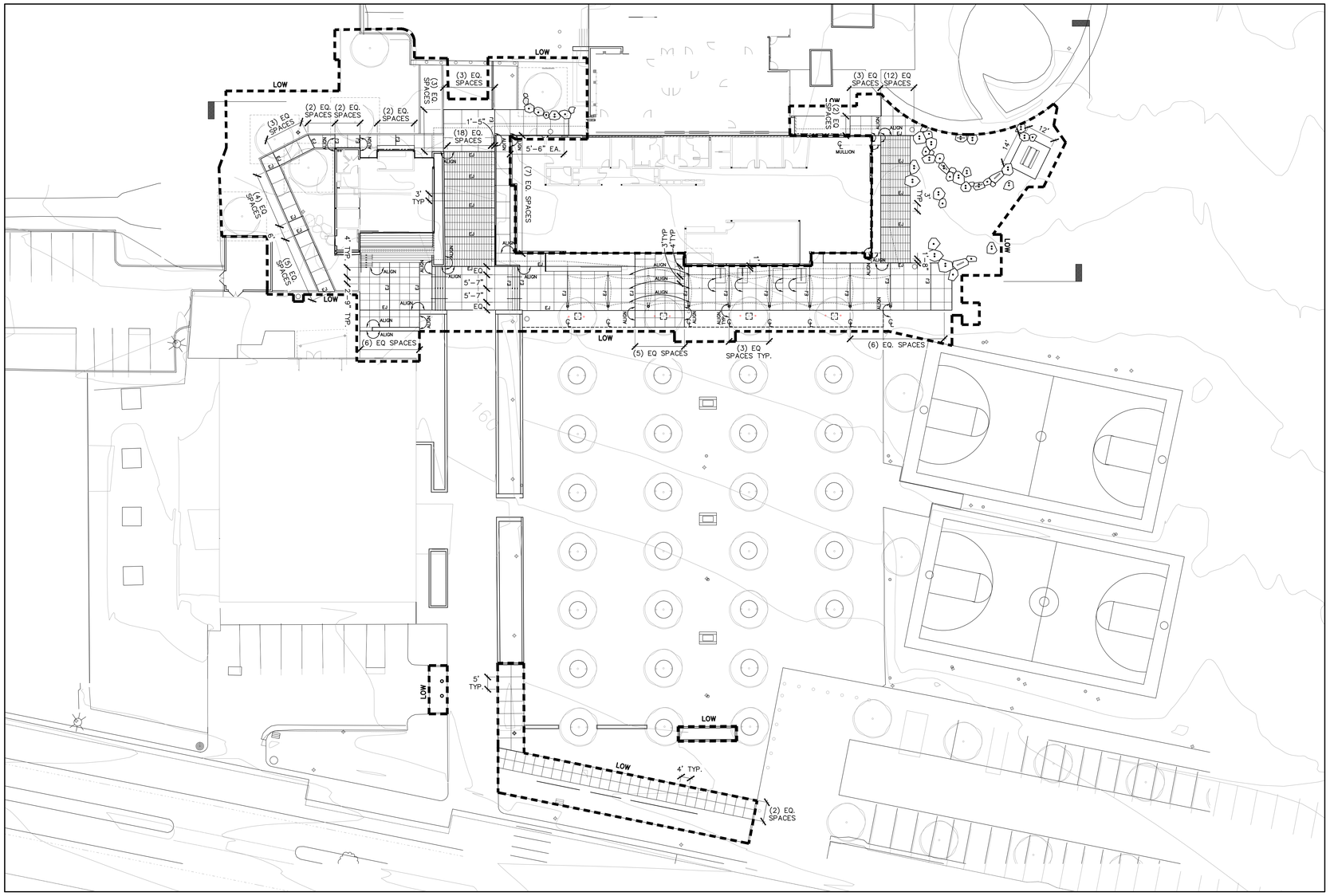

HARDSCAPE LAYOUT LEGEND

- ALIGN
- CENTERLINE
- TREE CENTER POINTS
- LIMIT OF WORK
- EXPANSION JOINT (TYP)
- SAW CUT SCORE LINE (TYP)

20' 10' 0' 20'
15' 5'

N

PICO BRANCH LIBRARY

Virginia Avenue Park
Santa Monica, CA 90404

PROJECT

KoningEizenbergArchitecture
1454 25th St, Santa Monica, CA 90404

310.828.6131 info@kearch.com
310.828.0719 fax www.kearch.com

ARCHITECT'S PROJECT NO.
1001

ARCHITECT

All designs, ideas, arrangements and plans indicated by these drawings are the property and copyright of the Architect and shall neither be used on any other work nor be disclosed to any other person for any use whatsoever without written permission.

Koning Eizenberg Architecture and/or its principals and employees waives any and all liability or responsibility for problems that may occur when these plans, drawings, specifications, and/or designs are followed without the professional's guidance with ambiguities, or conflicts which are alleged.

SPURLOCK POIRIER
Landscape Architects

2102 Hancock Street
San Diego, CA 92110
619.681.0090
619.681.0096 fax

LICENSED LANDSCAPE ARCHITECT
ANDREW SPURLOCK 1983
Signature
07/31/12
Renewal Date
Date
STATE OF CALIFORNIA

CONSULTANT

City of
Santa Monica
Architecture Services

1437 4TH STREET, SUITE 300
SANTA MONICA, CA 90401
TEL. (310) 458-2205
FAX. (310) 399-1541
architecture@smgov.net

SUBMITTED BY : _____ DATE : _____ 20 __

APPROVED BY : DATE : _____ 20 __
Miriam Mulder,
Architecture Services Manager

CITY OF SANTA MONICA
DEPARTMENT OF PUBLIC WORKS

REVIEWED BY : DATE : _____ 20 __

REVIEWED BY : DATE : _____ 20 __

REVIEWED BY : DATE : _____ 20 __

CITY CLIENT

NO.	DATE	BY	DESCRIPTION

REVISIONS

ISSUE
65% CONSTRUCTION DOCUMENTS / BID SET

DATE
01/23/2012

DRAWING NO. **6693**

SHEET OF SHEETS

SHEET TITLE
Hardscape
Dimension Plan

SHEET NO.
L1.01B

SHEET OF

DWG. NO. :

TITLE OF PROJECT :

HARDSCAPE LEGEND

NOTES: CONCRETE PAVING TYPES 1,2 AND 3 SAW-CUT SCORE LINES SHALL BE MADE WITH A BEVELED BLADE FOR A "V" SHAPE RESULT, REST SHALL BE STRAIGHT SAW-CUT SCORE LINES USE EXISTING SITE PAVING TO MATCH AS REFERENCE PANELS

SYMBOL (VEHICULAR / PEDESTRIAN)	ITEM	DETAIL	DESCRIPTION	MANUFACTURER	MODEL	COMMENTS	SPECIFICATION
	CONCRETE PAVING – TYPE 1	1+2 / L1.03	4" THICK PEDESTRIAN, VEHICULAR DEPTH PER CIVIL, INTEGRAL COLOR, COLOR AND FINISH TO MATCH EXISTING	L.M. SCOFIELD: 800-800-9900	"WINTER BEIGE", WASHED SAND FINISH	PROVIDE MOCKUP	32 13 16 32 13 73
	CONCRETE PAVING – TYPE 2	1+2 / L1.03	4" THICK PEDESTRIAN, VEHICULAR DEPTH PER CIVIL, INTEGRAL COLOR	L.M. SCOFIELD: 800-800-9900 SOUTHWEST BOULDER: 877-792-7625	"WINTER BEIGE", SEEDED AGGREGATE FINISH 3/4" SOUTHWEST BROWN CRUSHED AGGREGATE	PROVIDE MOCKUP	32 13 16 32 13 73
	CONCRETE PAVING – TYPE 3	1+2 / L1.03	4" THICK PEDESTRIAN, VEHICULAR DEPTH PER CIVIL, INTEGRAL COLOR WITH SELECT LITHOCRETE GLASS AGG. COLOR AND FINISH TO MATCH EXISTING	LITHOCRETE PAVING PER US PATENT 4,748,788 AND 6,016,635 CONTRACTOR: SHAW AND SONS OR EQUAL	"WINTER BEIGE" COLOR BY LM SCOFIELD 70% MEDIUM-DARK ORANGE, 30% MEDIUM-LIGHT, 3/16" TO 1/4", GRANULAR SHAPE, 75% DENSITY AT SURFACE SAND FINISH	PROVIDE MOCKUP	32 13 16 32 13 73
	CONCRETE PAVING – TYPE 4 PERMEABLE	5 / L1.03	4" THICK PEDESTRIAN PERMEABLE CONCRETE PAVING, GROUND FINISH, INTEGRAL COLOR WITH BASE	L.M. SCOFIELD: 800-800-9900	"WINTER BEIGE" COLOR BY LM SCOFIELD GROUND FINISH	PROVIDE MOCKUP WITH METAL EDGE DETAIL	32 14 45
	RESIN PAVEMENT	6 / L1.04	DECOMPOSED GRANITE AGGREGATE WITH 'ROAD OYL' TO MATCH EXISTING	SOIL STABILIZATION PRODUCTS 800-523-9992, SOUTHWEST BOULDER 877-792-7625	"ROAD OYL" WITH AUTUMN GOLD AGGREGATE	PROVIDE MOCKUP	32 12 17
	EXISTING CONCRETE PAV. TO REMAIN		REPAIR AS NECESSARY TO MATCH EXISTING				
	PERMEABLE PAVERS	3 / L1.03	4" x 8" x 2 3/8" THICK CERAMIC-BASED POROUS PAVERS STACK PATTERN WITH LONG DIMENSION RUNNING NORTH-SOUTH	AIROSTONE: 415-661-4648	"EKOPAVERS TYPE 2" PAVERS "SAND" COLOR	PROVIDE MOCKUP WITH METAL PAVER EDGE RESTRAINT	32 14 43
	ASPHALT		REFER TO CIVIL DRAWINGS				
	FLAGSTONE PAVERS	7 / L1.03	SAND-BASED FLAGSTONE PAVERS, MINIMUM 3' x 3' SIZE	SOUTHWEST BOULDER 877-792-7625	2" THICK, TYPE TO BE DETERMINED	PROVIDE MOCKUP	32 90 50
EJ	SAW CUT SCORE LINE (TYP)	2 / L1.03					
	EXPANSION JOINT (TYP)	2 / L1.03					

HEADERS/WALLS/STAIRS/RAILINGS

	ITEM	DETAIL	DESCRIPTION	MANUFACTURER	MODEL	COMMENTS	SPECIFICATION
-------	1A METAL PAVER EDGE RESTRAINT TYPE 1	3 / L1.03	3/16" THICK X 2-1/4" ALUMINUM PAVER RESTRAINT WITH STEEL STAKES PER MANUFACTURER	PERMALOC: 800-256-9660	STRUCTUREDGE ALUMINUM PAVER RESTRAINT, COLOR AND FINISH: "BLACK DURAFLEX"		05 50 00
-------	1B METAL EDGING, TYPE 2	4 / L1.03	1/4" X 5" STEEL EDGING	DURAEDGE 800-888-7425	BLACK COLOR		32 93 00
	2A RAISED CURB, TYPE	6 / L1.03	C.I.P. CONCRETE CURB, 6" WIDE, 6" ABOVE F.S., DEPTH OF FOOTING VARIES		STANDARD GRAY CONCRETE, LIGHT BROOM FINISH		32 13 13
	2B MOW CURB	1 / L1.04	C.I.P. CONCRETE CURB, 6" WIDE, SURFACE FLUSH WITH ADJACENT SURFACE		STANDARD GRAY CONCRETE, LIGHT BROOM FINISH		32 13 13
	3 CHEEK WALL	2 / L1.05	C.I.P. CONCRETE WALL, 2'-0" WIDE, COLOR AND FINISH TO MATCH EXISTING WALLS	L.M. SCOFIELD: 800-800-9900	"WINTER BEIGE" COLOR, WASHED SAND FINISH	PROVIDE MOCKUP	03 33 00
	4 SEAT WALL, TYPE 1	2+4 / L1.04	C.I.P. CONCRETE FEATURE WALL ,18"H X 18"W C.I.P. CONCRETE SEAT WALL, INTEGRAL COLOR. COLOR AND FINISH TO MATCH EXISTING WALLS	L.M. SCOFIELD: 800-800-9900	"WINTER BEIGE" COLOR, WASHED SAND FINISH		03 33 00
	5A SEAT WALL WITH WOOD BENCH, TYPE 2	5 / L1.04	C.I.P. CONCRETE WALL (2)18"H X 18"W WITH WOOD BACK AND SEAT, INTEGRAL COLOR, LENGTH PER PLAN	L.M. SCOFIELD: 800-800-9900 TIMBERFORM: 800-547-1940	"WINTER BEIGE" COLOR, WASHED SAND FINISH CUSTOM MADE 2006-22-M PARKWAY BENCH, 21'-9" LONG AND 16'-9" LONG ARBOR BACKREST, BLACK CASPAX-7 POWDER-COATED STEEL FRAMES, FSC CERTIFIED 3X8 REDWOOD SLATS	PROVIDE MOCKUP	03 33 00 05 50 00 12 93 00
	5B SEAT WALL WITH WOOD BENCH, TYPE 3	4 / L1.05	C.I.P. CONCRETE WALL (2)18"H X 18"W WITH WOOD BACK AND SEAT, INTEGRAL COLOR, LENGTH PER PLAN	L.M. SCOFIELD: 800-800-9900 TIMBERFORM: 800-547-1940	"WINTER BEIGE" COLOR, WASHED SAND FINISH (3) CUSTOM MADE 2201-6-B-M ARBOR BENCH BACKREST, 36", 48"& 60" LONG, BLACK CASPAX-7 POWDER-COATED STEEL FRAMES, FSC CERTIFIED 3X8 REDWOOD SLATS	PROVIDE MOCKUP	03 33 00 05 50 00 05 50 00
	5C RETAINING WALL	3 / L1.04	C.I.P. CONCRETE WALL, 6" WIDE, HEIGHT VARIES, 6"H RAISED CURB ON HIGH SIDE, INTEGRAL COLOR, FINISH TO MATCH EXISTING WALLS	L.M. SCOFIELD: 800-800-9900	"WINTER BEIGE" COLOR, WASHED SAND FINISH	PROVIDE MOCKUP	03 33 00
	6A CONCRETE STEPS WITH HANDRAILS	5 / L1.06	CONCRETE STEPS, INTEGRAL COLOR; REUSE EXISTING HANDRAILS HANDRAILS SHALL BE EQUALLY CENTERED ON STEPS,	L.M. SCOFIELD: 800-800-9900	"WINTER BEIGE" COLOR, WASHED SAND FINISH RAILING COLOR: RAL #7026 / POST COLOR: RAL #7039		03 33 00
	6B TERRACED AMPHITHEATER AND STEPS		NARROW MODULAR CONCRETE PLANKS, PER ARCHITECT				
	7A RAMP WITH HANDRAIL	5 / L1.06					
	7B SLOPED WALK						

SITE FURNISHINGS

	ITEM	DETAIL	DESCRIPTION	MANUFACTURER	MODEL	COMMENTS	SPECIFICATION
	8 VINE CABLE SYSTEM	1 / L1.07	STAINLESS STEEL METAL CABLE SYSTEM ATTACHED TO WALL REFER TO ARCH. FOR ATTACHMENT DETAIL TO BUILDING	JAKOB INC.: 866-525-6226	JAKOB INC. QUOTATION NUMBER 16102		32 94 46
	9 PICNIC TABLES	1 / L1.05	WOOD AND STEEL ACCESSIBLE TABLE	TIMBERFORM: 800-547-1940	CUSTOM MADE 2063 ACCESSIBLE PICNIC TABLE AND SEATS BLACK CASPAX-7 POWDER-COATED STEEL FRAMES, FSC CERTIFIED 3X8 REDWOOD SLATS		12 93 00
	10 BENCH	3 / L1.05	(5) 3' WIDE WOOD BACK ON LARGE BOULDER	TIMBERFORM: 800-547-1940	CUSTOM MADE 2201-6-B-M ARBOR BENCH BACKREST, 36" LONG BLACK CASPAX-7 POWDER-COATED STEEL FRAMES, FSC CERTIFIED 3X8 REDWOOD SLATS,	PROVIDE MOCKUP	12 93 00 32 90 50
	11 BOULDERS: LARGE BOULDER MEDIUM BOULDER SMALL BOULDER	1-4 / L1.06	LARGE BOULDERS: 5' X 27-30"H MEDIUM BOULDERS: 2.5' TO 3.5' X 24-27" H SMALL BOULDERS: 1-2' X 12-18" H	SOUTHWEST BOULDER: 877-792-7625	"SOUTHWEST BROWN"	PROVIDE MOCKUP	32 90 50
	12 TRASH		(5) CONCRETE TRASH RECEPTACLE WITH LID	QUICKCRETE: 909-737-6340	#QR-CAL3136WA26; RECEPTACLE W/ #A-26 LID (ALUMINUM) CONCRETE FINISH: COLOR #C-1, TEXTURE #T-1; LINER QRPL26		12 93 00

OTHER

	ITEM	DETAIL	DESCRIPTION	MANUFACTURER	MODEL	COMMENTS	SPECIFICATION
	13 SKATEBOARD DETERRENT	4 / L1.04	STAINLESS STEEL INSERTS	SKATESTOPPERS 619-447-6374	DIAMOND 90-12		05 50 00
	14A BUILDING CANOPY		PER ARCHITECT				
	14B PLAZA SHADE STRUCTURE		PER ARCHITECT				
	15 DOOR MAT		PER ARCHITECT				
	16 LIBRARY MONUMENT SIGN		PER SIGNAGE DRAWINGS				
	17 CATCH BASIN		PER CIVIL				
	18 CDS UNIT		PER CIVIIL				
	19 EXISTING CURB TO REMAIN		SAWCUT AND FINISH END				
	20 EXISTING PLANTER TO REMAIN		PROTECT IN PLACE				
	21 GUARDRAIL OR HANDRAIL		PER ARCHITECT				
	22 PERFORATED PIPE		REFER TO CIVIL FOR PIPE AND CONNECTION INFORMATION				
	23 EXISTING LIGHT TO REMAIN		REFER TO ELECTRICAL PLANS				
	24 RELOCATED LIGHT		REFER TO ELECTRICAL PLANS				
	25 RELOCATED BOLLARDS		REFER TO ARCHITECTURAL PLANS				
	TREE PROTECTION ZONE (TPZ)		REFER TO PLANTING PLANS				
	LIMIT OF WORK						
PA	PLANTING AREA						

PICO BRANCH LIBRARY

Virginia Avenue Park
Santa Monica, CA 90404

PROJECT

KoningEizenberg Architecture
1454 25th St, Santa Monica, CA 90404
310.828.6131 info@kearch.com
310.828.0719 fax www.kearch.com

ARCHITECT'S PROJECT NO.
1001

ARCHITECT

All designs, ideas, arrangements and plans indicated by these drawings are the property and copyright of the Architect and shall neither be used on any other work nor be disclosed to any other person for any use whatsoever without written permission.

Koning Eizenberg Architecture and/or its principals and employees waives any and all liability or responsibility for problems that may occur when these plans, drawings, specifications, and/or designs are followed without the professional's guidance with ambiguities, or conflicts which are alleged.

SPURLOCK POIRIER
Landscape Architects
2102 Hancock Street
San Diego, CA 92110
619.681.0090
619.681.0096 fax

CONSULTANT

City of Santa Monica
Architecture Services
1437 4TH STREET, SUITE 300
SANTA MONICA, CA 90401
TEL. (310) 458-2205
FAX. (310) 399-1541
architecture@smgov.net

SUBMITTED BY : DATE : 20

APPROVED BY : DATE : 20
Miriam Mulder,
Architecture Services Manager
CITY OF SANTA MONICA
DEPARTMENT OF PUBLIC WORKS

REVIEWED BY : DATE : 20

REVIEWED BY : DATE : 20

REVIEWED BY : DATE : 20

CITY CLIENT

NO.	DATE	BY	DESCRIPTION

REVISIONS

ISSUE
65% CONSTRUCTION DOCUMENTS / BID SET

DATE
01/23/2012

DRAWING NO. **6693**

SHEET OF SHEETS

SHEET TITLE
Hardscape Legend

SHEET NO.
L1.02

SHEET OF

DWG. NO. - -

TITLE OF PROJECT :

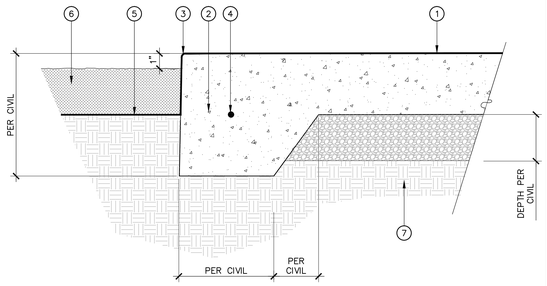

1. CONCRETE PAVING PER LEGEND
2. THICKENED EDGE
3. 1/8" RADIUS AT ALL EXPOSED EDGES
4. #3 BAR CONTINUOUS, 48" LAPPED AND WIRED
5. FINISH GRADE AT PLANTING
6. MULCH PER PLANS AND SPECIFICATIONS
7. COMPACTED SUBGRADE PER GEOTECHNICAL REPORT

NOTES:

1. THICKENED EDGE REQUIRED WHEREVER CONCRETE PAVING IS ADJACENT TO AREAS OF AT-GRADE PLANTING OR UNIT PAVERS.
2. REFER TO CIVIL DRAWINGS FOR REINFORCING AND BASE REQUIREMENTS FOR VEHICULAR AND PEDESTRIAN APPLICATION

1 DEEPENED CONCRETE EDGE

3" = 1'-0"

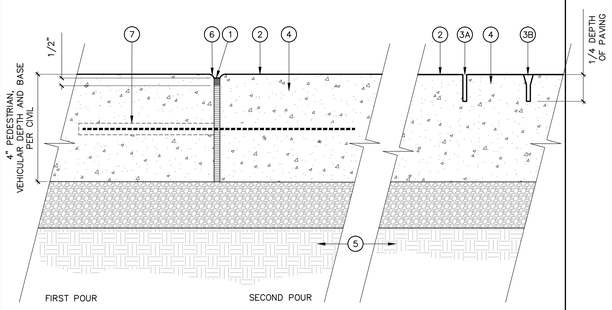

EXPANSION JOINT - SECTION

SAW-CUT SCORE LINE SECTION

1. 1/4" EXPANSION JOINT W/ SEALANT (TYP)
2. CONCRETE PAVING PER LEGEND
3A. 1/8" WIDE DEEP SAWCUT SCORELINE/JOINT, DEPTH TO BE 1/4 OF SLAB DEPTH
3B. BEVELED OR "V" SHAPED SAWCUT SCORELINE/JOINT, DEPTH TO BE 1/4 OF SLAB DEPTH
4. CONCRETE PAVING PER PLAN
5. COMPACTED SUBGRADE PER GEOTECHNICAL REPORT
6. 1/8" RADIUS AT ALL EXPOSED EDGES
7. SPEEDY DOWEL W/ 18" SLEEVE LOCATED MIDSLAB, CENTERED ON JOINT

NOTES:

1. PROVIDE EXPANSION JOINTS WHERE INDICATED ON THE DRAWINGS, AND WHERE PAVING ABUTS WALLS, CURBS, STEPS, TOP & BOTTOM OF RAMPS AND OTHER VERTICAL APPURTENANCES. OMIT DOWELS WHERE ABUTTING WALLS, BUILDINGS, & CURBS.
2. ALL TOOLED EDGES OF JOINTS SHALL BE 1/8" RADIUS MAX.
3. REFER TO CIVIL DRAWINGS FOR REINFORCING AND BASE REQUIREMENTS FOR VEHICULAR AND PEDESTRIAN APPLICATION

2 CONCRETE PAVING JOINTS

3" = 1'-0"

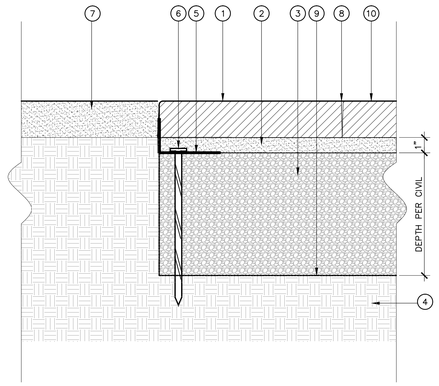

1. PRE-CAST PERMEABLE PAVERS PER LEGEND
2. SAND SETTING BED
3. 3/4" CRUSHED AGGREGATE BASE, COMPACTED; USE NO ROUND AGGREGATE
4. COMPACTED SUBGRADE PER GEOTECHNICAL REPORT
5. PERMALOC STRUCTURE EDGE ALUMINUM PAVER RESTRAINT. 3/16" THICK X 2-1/4" TALL RESTRAINT
6. 3/8" X 10" SPIRAL STEEL SPIKE AT 12" MAX O.C., 4" O.C. MIN.; INSTALL PER MANUFACTURER'S RECOMMENDATIONS
7. ADJACENT NATURAL PAVING TO REMAIN, SAW CLEAN CUT
8. BEDDING SAND IN JOINT; SET PAVERS AGAINST EACH OTHER HAND-TIGHT
9. GEOTEXTILE, TURNED UP ON SIDES
10. FILTER FABRIC

3 PERMEABLE PAVERS W/ METAL EDGING

3" = 1'-0"

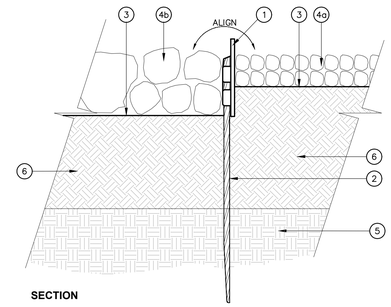

SECTION

1. 1/4" X 5-1/2" X16'L STEEL EDGER, REFER TO HARDSCAPE PLAN AND LEGEND
2. 1/4" STEEL STAKE, TAPERED, PER MANUFACTURER'S RECOMMENDATION FOR SIZE, TYPE AND SPACING, FINISH TO MATCH STEEL EDGING
3. FINISH GRADE IN PLANTING AREA

4A. 1" CRUSHED AGGREGATE MULCH PER PLAN

4B. 2-4" CRUSHED AGGREGATE MULCH PER PLAN

5. COMPACTED SUBGRADE PER GEOTECHNICAL REPORT
6. PLANTING BACKFILL PER SPECIFICATIONS

4 METAL HEADER

3" = 1'-0"

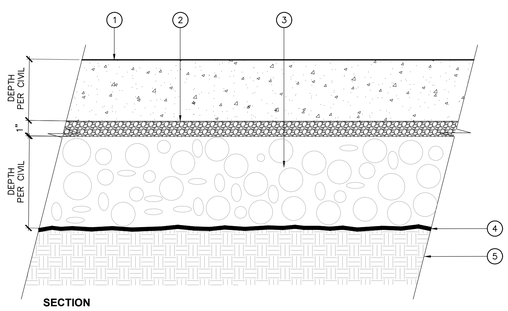

SECTION

1. POROUS CONCRETE PER LEGEND, DEPTH PER CIVIL
2. 1" X #4 CHOKER COURSE, 1" MIN. THICK
3. 1-1/2" WASHED UNIFORM GRADED AGGREGATE BASE.
4. NON-WOVEN GEOTEXTILE
5. COMPACTED SUBGRADE PER GEOTECHNICAL REPORT

NOTES:

1. PROVIDE EXPANSION JOINTS WHERE INDICATED ON THE DRAWINGS, AND WHERE PAVING ABUTS WALLS, CURBS, STEPS, RAMPS AND OTHER VERTICAL APPURTENANCES. OMIT DOWELS WHERE ABUTTING WALLS, BUILDINGS, & CURBS.
2. ALL SCORE JOINTS SHALL BE SAWCUT.
3. COLD JOINTS ONLY AT EXPANSION JOINTS.
4. EXPANSION JOINTS 20' O.C. MAX SPACING
5. REFER TO L1.08 FOR BASE DEPTH NEAR TREE PROTECTION ZONE. IN THE TREE PROTECTION ZONE, DO NOT COMPACT EXISTING SUBGRADE NOR EXCAVATE BELOW EXISTING GRADE

5 POROUS PAVING

3" = 3'-0"

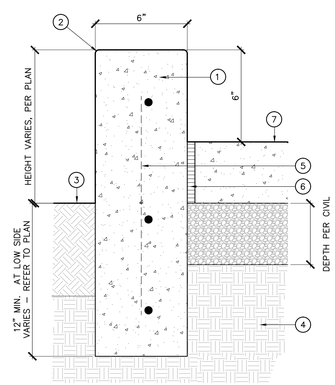

SECTION OUTSIDE TREE PROTECTION ZONE

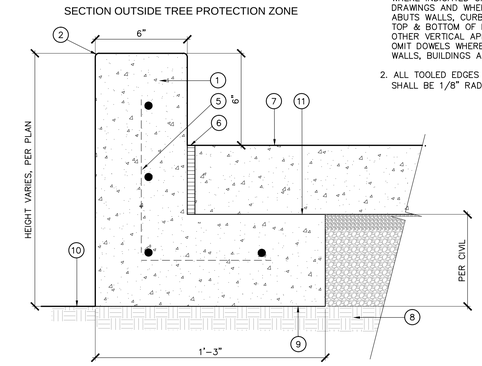

SECTION INSIDE TREE PROTECTION ZONE

1. CONCRETE
2. 1/8" RADIUS AT ALL EXPOSED EDGES
3. FINISH GRADE AT PLANTING
4. COMPACTED SUBGRADE PER GEOTECHNICAL REPORT
5. #4 REBAR CONTINUOUS 16" O.C., BOTH DIRECTIONS
6. EXPANSION JOINT WHERE ABUTS CONCRETE PAVING
7. PAVING PER LEGEND
8. EXISTING SUBGRADE AT TREE PROTECTION ZONE, DO NOT REGRADE
9. FOOTING SHALL SIT ON EXISTING GRADE IN TREE PROTECTION ZONE
10. EXISTING GRADE
11. COLD JOINT

NOTES:

1. PROVIDE EXPANSION JOINTS WHERE INDICATED ON THE DRAWINGS AND WHERE PAVING ABUTS WALLS, CURBS, STEPS, TOP & BOTTOM OF RAMPS AND OTHER VERTICAL APPURTENANCES. OMIT DOWELS WHERE ABUTTING WALLS, BUILDINGS AND CURBS.
2. ALL TOOLED EDGES OF JOINTS SHALL BE 1/8" RADIUS MAX

6 RAISED CURB

3" = 1'-0"

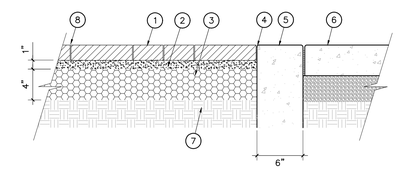

SECTION @ FLAGSTONE PAVING & MOW CURB

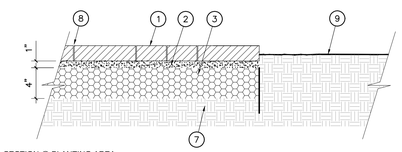

SECTION @ PLANTING AREA

1. PAVERS SEE MATERIALS SCHEDULE
2. SAND SETTING BED
3. COMPACTED BASE MATERIAL PER SPECS
4. 1/8" RADIUS EDGES
5. CONCRETE MOW CURB, SEE DETAIL
6. PERMEABLE CONCRETE PATH, SEE DETAIL
7. COMPACTED SUBGRADE PER GEOTECHNICAL REPORT
8. SWEEP SAND INTO ALL JOINTS
9. FINISH GRADE

NOTES: REFER TO PLANS FOR STAKING, LAYOUT AND PATTERN OF PAVERS

7 FLAGSTONE PAVERS

1 1/2" = 1'-0"

PICO BRANCH LIBRARY

Virginia Avenue Park
Santa Monica, CA 90404

PROJECT

KoningEizenbergArchitecture
1454 25th St, Santa Monica, CA 90404
310.828.6131 info@kearch.com
310.828.0719 fax www.kearch.com

ARCHITECT'S PROJECT NO.
1001

ARCHITECT

All designs, ideas, arrangements and plans indicated by these drawings are the property and copyright of the Architect and shall neither be used on any other work nor be disclosed to any other person for any use whatsoever without written permission.

Koning Eizenberg Architecture and/or its principals and employees waives any and all liability or responsibility for problems that may occur when these plans, drawings, specifications, and/or designs are followed without the professional's guidance with ambiguities, or conflicts which are alleged.

SPURLOCK POIRIER
Landscape Architects
2102 Hancock Street
San Diego, CA 92110
619.681.0090
619.681.0096 fax

LICENSED LANDSCAPE ARCHITECT
ANDREW SPURLOCK - 1983
STATE OF CALIFORNIA
Signature
07/31/12
Renewal Date
Date

CONSULTANT

City of Santa Monica
Architecture Services
1437 4TH STREET, SUITE 300
SANTA MONICA, CA 90401
TEL. (310) 458-2205
FAX. (310) 399-1541
architecture@smgov.net

SUBMITTED BY: DATE: 20

APPROVED BY: Miriam Mulder, Architecture Services Manager DATE: 20

CITY OF SANTA MONICA
DEPARTMENT OF PUBLIC WORKS

REVIEWED BY: DATE: 20

REVIEWED BY: DATE: 20

REVIEWED BY: DATE: 20

CITY CLIENT

NO.	DATE	BY	DESCRIPTION

REVISIONS

ISSUE
65% CONSTRUCTION DOCUMENTS / BID SET

DATE
01/23/2012

DRAWING NO. **6693**

SHEET OF SHEETS

SHEET TITLE
Hardscape Details

SHEET NO.
L1.03

SHEET OF

DWG. NO. - -

TITLE OF PROJECT

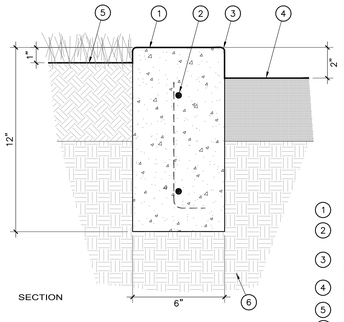

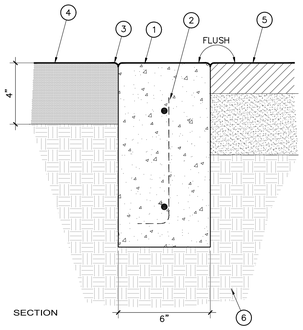

1. CONCRETE
2. #4 REBAR CONT. @ 16" O.C. VERT. CENTERED ON CURB, TYP.
3. 1/8" RADIUS AT ALL EXPOSED EDGES
4. PAVING PER LEGEND
5. ADJACENT FLAGSTONE PAVING PER (7 / L1.03)
6. COMPACTED SUBGRADE PER GEOTECHNICAL REPORT

NOTES:

1. PROVIDE EXPANSION JOINTS WHERE INDICATED ON THE DRAWINGS AND WHERE PAVING ABUTS WALLS, CURBS, STEPS, TOP & BOTTOM OF RAMPS AND OTHER VERTICAL APPURTENANCES. OMIT DOWELS WHERE ABUTTING WALLS, BUILDINGS AND CURBS.

1 MOW CURB

3" = 1'–0"

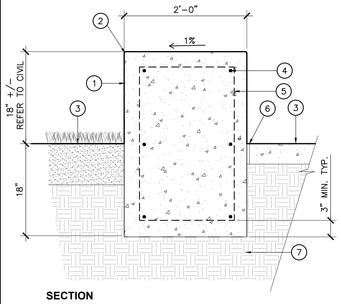

SECTION

1. C.I.P. CONCRETE WALL REFER TO HARDSCAPE LEGEND FOR FINISH
2. 1/8" RADIUS AT ALL EXPOSED EDGES
3. FINISH SURFACE, REFER TO PLAN
4. #4 HORIZONTAL @12" O.C.
5. #4 VERTICAL @12" O.C.
6. EXPANSION JOINT
7. COMPACTED SUBGRADE PER GEOTECHNICAL REPORT

NOTES:

1. SEE GRADING PLAN FOR FINISH GRADE ELEVATIONS AND FOR TOP OF WALL AND TOP OF CURB ELEVATIONS
2. SEE HARDSCAPE LEGEND FOR CONCRETE COLOR AND FINISH
3. REFER TO STRUCTURAL FOR FOOTING AND REINFORCEMENT REQUIREMENTS

2 C.I.P. CONCRETE SEAT WALL TYPE 1

1" = 1'–0"

1. ADJACENT FINISH SURFACE, PER HARDSCAPE PLAN
2. 1/8" R TOOLED EDGE, TYP. @ ALL EXPOSED EDGES
3. C.I.P. CONCRETE CURB WALL, FINISH PER PLAN
4. AMENDED SOIL FOR PLANTING AREA
5. CONCRETE FOOTING AND REINFORCING, REFER TO STRUCTURAL
6. COMPACTED SUBGRADE PER GEOTECHNICAL REPORT
7. FINISH GRADE OF ADJACENT PLANTING AREA
8. 2" DIA. PVC WEEPHOLE THROUGH WALL AT 24" O.C.
9. DRAINAGE AGGREGATE FILL
10. EXPANSION JOINT

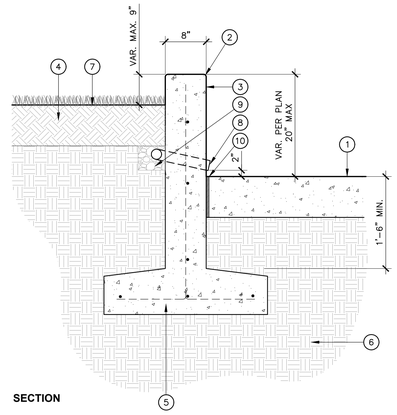

SECTION

NOTES:

1. SEE GRADING PLAN FOR FINISH GRADE ELEVATIONS AND FOR TOP OF WALL AND TOP OF CURB ELEVATIONS
2. SEE HARDSCAPE LEGEND FOR CONCRETE COLOR AND FINISH
3. REFER TO STRUCTURAL FOR FOOTING AND REINFORCEMENT REQUIREMENTS

3 C.I.P. CONCRETE RETAINING WALL

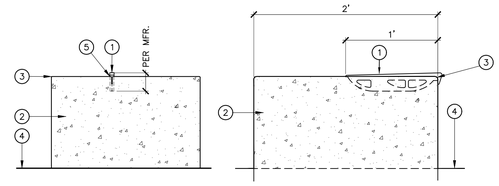

ELEVATION FRONT VIEW

SECTION

1. 316 GRADE STAINLESS STEEL "T" PLATE .56" THICK, 12" +/–" LONG, 2"+/– TALL, MOUNTED IN SAWCUT. ALIGN SKATEBOARD DETERRENT WITH CONCRETE PAVING SCORELINES.
2. C.I.P. CONCRETE WALL, TYPE 1
3. 1/8" RADIUS
4. FINISH SURFACE PER PLAN
5. 1/4" SAWCUT, FILL WITH EPOXY ADHESIVE TO MATCH WALL COLOR.

NOTE:

1. COORDINATE DETAIL WITH MANUFACTURER

4 SKATEBOARD DETERRENT

1 1/2" = 1'–0"

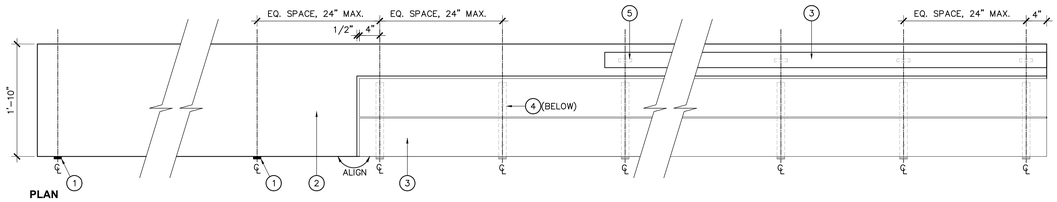

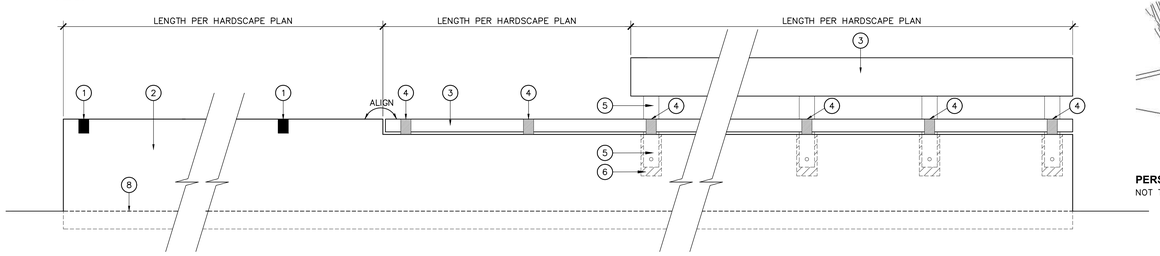

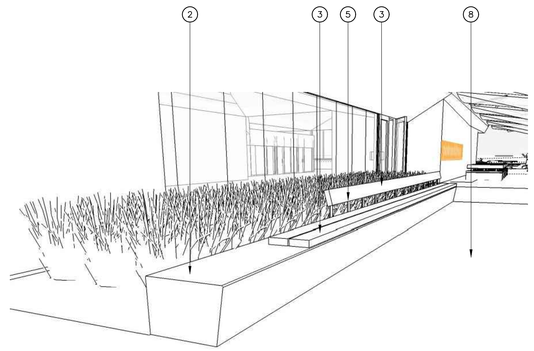

PERSPECTIVE
NOT TO SCALE

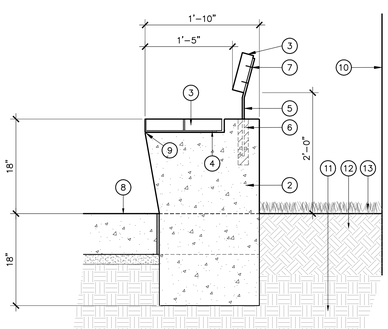

1. SKATEBOARD DETERRENT
2. C.I.P. CONCRETE WALL, COLOR AND FINISH PER HARDSCAPE PLAN
3. 3 X 8 F.S.C. CERTIFIED REDWOOD SLAT, TO BE PROVIDED BY MANUFACTURER
4. WOOD SLAT SUPPORT METAL BRACKET WITH INTEGRAL SKATEBOARD DETERRENT
5. POWDER COATED STEEL SEATBACK, TO BE SUPPLIED BY MANUFACTURER
6. EPOXY RESIN. SEATBACK EMBEDDED INTO CONCRETE, DEPTH PER MANUFACTURER, COLOR TO MATCH CONCRETE
7. METAL FASTENER, TO BE SUPPLIED BY MANUFACTURER
8. ADJACENT FINISH SURFACE, PER HARDSCAPE PLAN
9. 1/8" RADIUS
10. BUILDING WALL
11. COMPACTED SUBGRADE PER GEOTECHNICAL REPORT
12. AMENDED SOIL PER SPECIFICATIONS
13. PLANT MATERIAL PER PLANS

NOTES:

1. DETAIL PER MANUFACTURER
2. MANUFACTURER: TIMBERFORM SITE FURNISHINGS, 800–547–1940
3. INSTALL BENCHES PER MANUFACTURER'S SPECIFICATIONS
4. REFER TO LEGEND FOR MODEL NUMBER

5 SEAT WALL WITH WOOD BENCH, TYPE 2

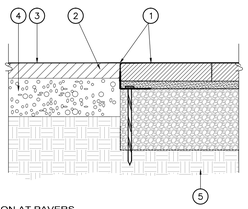

SECTION AT PAVERS

1. PAVERS AND EDGING PER LEGEND
2. FILL ALL VOIDS UNDER RESTAINT FOR PROPER SUPPORT.
3. "ROAD OYL" RESIN MODIFIED EMULSION D.G. STABILIZER 2" DEPTH, ROLL TO COMPACT 90% MIN. PAVING TO MEET FLUSH WITH EDGING/ASPHALT SEE PLANS FOR LAYOUT
4. GRANULAR BASE PER CIVIL
5. COMPACTED SUBGRADE PER SOILS REPORT.

NOTES:
1. MILL FINISH – NATURAL ALUMINUM TYP.
2. 8' SECTIONS CONNECTED WITH 4" SLIDING CONNECTOR.

6 RESIN PAVING

1" = 1'–0"

PICO BRANCH LIBRARY

Virginia Avenue Park
Santa Monica, CA 90404

PROJECT

KoningEizenbergArchitecture
1454 25th St, Santa Monica, CA 90404
310.828.6131 info@kearch.com
310.828.0719 fax www.kearch.com

ARCHITECT'S PROJECT NO.
1001

ARCHITECT

All designs, ideas, arrangements and plans indicated by these drawings are the property and copyright of the Architect and shall neither be used on any other work nor be disclosed to any other person for any use whatsoever without written permission.

Koning Eizenberg Architecture and/or its principals and employees waives any and all liability or responsibility for problems that may occur when these plans, drawings, specifications, and/or designs are followed without the professional's guidance with ambiguities, or conflicts which are alleged.

SPURLOCK POIRIER
Landscape Architects
2102 Hancock Street
San Diego, CA 92110
619.681.0090
619.681.0096 fax

LICENSED LANDSCAPE ARCHITECT
ANDREW SPURLOCK – 1983
Signature
07/31/12
Renewal Date
Date
STATE OF CALIFORNIA

CONSULTANT

City of Santa Monica
Architecture Services
1437 4TH STREET, SUITE 300
SANTA MONICA, CA 90401
TEL. (310) 458-2205
FAX. (310) 399-1541
architecture@smgov.net

SUBMITTED BY : DATE : 20

APPROVED BY : Miriam Mulder, Architecture Services Manager DATE : 20
CITY OF SANTA MONICA
DEPARTMENT OF PUBLIC WORKS

REVIEWED BY : DATE : 20

REVIEWED BY : DATE : 20

REVIEWED BY : DATE : 20

CITY CLIENT

NO.	DATE	BY	DESCRIPTION

REVISIONS

ISSUE
65% CONSTRUCTION DOCUMENTS / BID SET

DATE
01/23/2012

DRAWING NO. **6693**

SHEET OF SHEETS

SHEET TITLE
Hardscape Details

SHEET NO.
L1.04

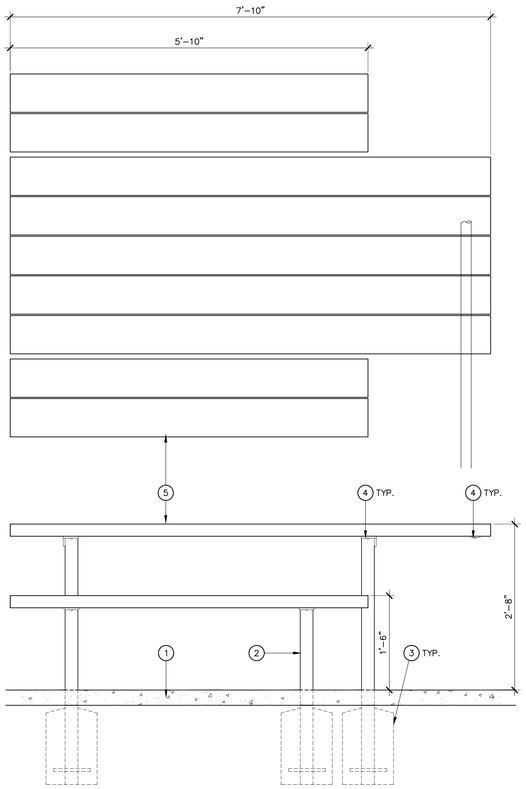

1 ADJACENT CONCRETE, PER HARDCAPE PLAN
2 POWDER COATED STEEL POST, TO BE SUPPLIED BY MANUFACTURER
3 C.I.P. CONCRETE FOOTING, PER MANUFACTURER SPECIFICATIONS
4 METAL FASTENER, TO BE SUPPLIED BY MANUFACTURER
5 3 X 8 FSC REDWOOD PLANK, TO BE SUPPLIED BY MANUFACTURER

NOTES:

1. DETAIL PER MANUFACTURER
2. MANUFACTURER: TIMBERFORM SITE FURNISHINGS, 800-547-1940
3. INSTALL PER MANUFACTURER'S SPECIFICATIONS
4. REFER TO LEGEND FOR MODEL NUMBER

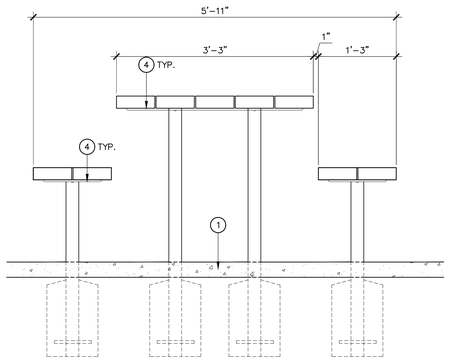

1 PICNIC TABLE

1" = 1'-0"

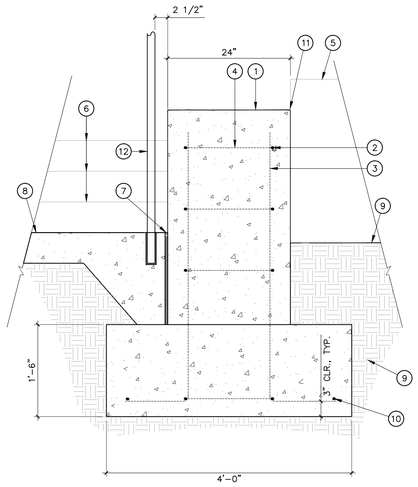

SECTION

1 CONCRETE CHEEK WALL
2 #5 CONT. 12" O.C. HORIZONTAL EACH FACE
3 #5 CONT. 12" O.C. VERTICAL EACH FACE
4 #3 CONT. 24" O.C.
5 WALL BEYOND WHERE OCCURS SEE PLANS
6 STEPS BEYOND PER 5/L1.06 2/L1.03
7 EXPANSION JOINT PER
8 FINISH GRADE AT PAVING
9 COMPACTED SUBGRADE PER GEOTECHNICAL REPORT
10 (4) #5 CONT.
11 1/4" RADIUS
12 HANDRAIL BEYOND PER LEGEND

2 CHEEK WALL

1" = 1'-0"

1 ADJACENT FINISHED SURFACE, VARIES PER HARDSCAPE PLAN
2 BOULDER TO MATCH EXISTING ONSITE, TO BE SELECTED BY LANDSCAPE ARCHITECT. TO BE INSTALLED PER 1/L1.06
3 METAL FASTENER, TO BE SUPPLIED BY MANUFACTURER
4 3 X 8 FSC REDWOOD PLANK, TO BE SUPPLIED BY MANUFACTURER
5 POWDER COATED STEEL SEATBACK, TO BE SUPPLIED BY MANUFACTURER
6 SEATBACK EMBEDED INTO BOULDER, DEPTH PER MANUFACTURER
7 EPOXY RESIN, TO SECURE SEATBACK INTO BOULDER, HOLE DIA. AND DEPTH PER MANUFACTURER'S RECOMMENDATIONS. COLOR TO MATCH BOULDER.

NOTES:

1. DETAIL PER MANUFACTURER
2. MANUFACTURER: TIMBERFORM SITE FURNISHINGS, 800-547-1940
3. INSTALL BENCHES PER MANUFACTURER'S RECOMMENDATIONS
4. LANDSCAPE ARCHITECT TO OBSERVE AND APPROVE CORRECT LOCATIONS OF BOULDERS PRIOR TO INSTALLATION
5. BOULDER TO BE PLACED SUCH THAT A FLAT SURFACE FACES UP, WITH NO PROTRUSIONS EXTENDING VERTICALLY OR ROUGH EDGES EXPOSED

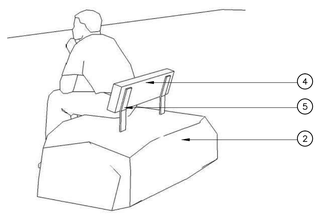

PERSPECTIVE
NOT TO SCALE

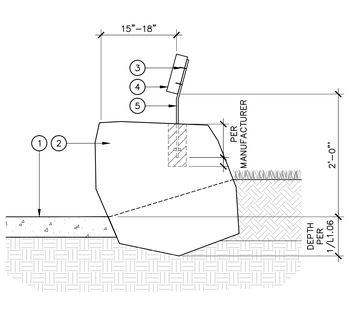

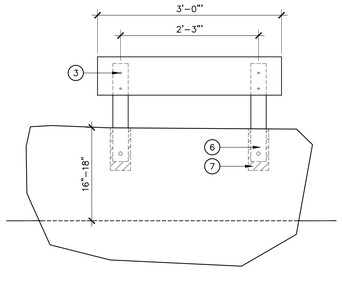

3 BENCH TYPE 2

1" = 1'-0"

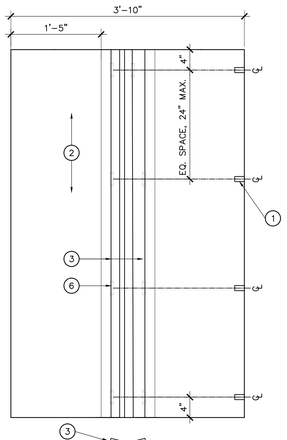

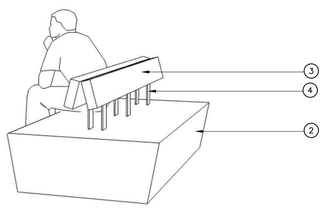

PERSPECTIVE
NOT TO SCALE

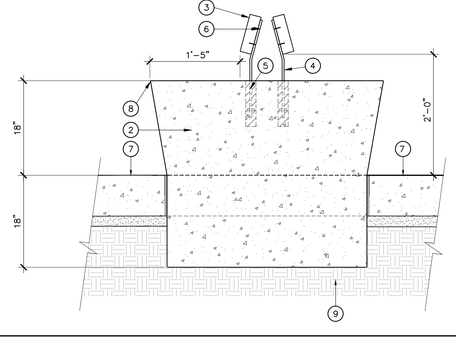

1 SKATEBOARD DETERRENT
2 C.I.P. CONCRETE BENCH, COLOR AND FINISH PER LEGEND
3 3 X 8 F.S.C. CERTIFIED REDWOOD SLAT, TO BE PROVIDED BY MANUFACTURER
4 POWDER COATED STEEL SEATBACK, TO BE SUPPLIED BY MANUFACTURER
5 EPOXY RESIN. SEATBACK EMBEDDED INTO CONCRETE, DEPTH PER MANUFACTURER, COLOR TO MATCH CONCRETE
6 METAL FASTENER, TO BE SUPPLIED BY MANUFACTURER
7 ADJACENT FINISH SURFACE, PER HARDSCAPE PLAN
8 1/8" RADIUS
9 COMPACTED SUBGRADE PER GEOTECHNICAL REPORT

NOTES:

1. DETAIL PER MANUFACTURER
2. MANUFACTURER: TIMBERFORM SITE FURNISHINGS, 800-547-1940
3. INSTALL BENCHES PER MANUFACTURER'S SPECIFICATIONS
4. REFER TO LEGEND FOR MODEL NUMBER

4 SEAT WALL, TYPE 3

1" = 1'-0"

PICO BRANCH LIBRARY

Virginia Avenue Park
Santa Monica, CA 90404

PROJECT

KoningEizenbergArchitecture
1454 25th St, Santa Monica, CA 90404
310.828.6131 info@kearch.com
310.828.0719 fax www.kearch.com

ARCHITECT'S PROJECT NO.
1001

ARCHITECT

All designs, ideas, arrangements and plans indicated by these drawings are the property and copyright of the Architect and shall neither be used on any other work nor be disclosed to any other person for any use whatsoever without written permission.

Koning Eizenberg Architecture and/or its principals and employees waives any and all liability or responsibility for problems that may occur when these plans, drawings, specifications, and/or designs are followed without the professional's guidance with ambiguities, or conflicts which are alleged.

SPURLOCK POIRIER
Landscape Architects
2102 Hancock Street
San Diego, CA 92110
619.681.0090
619.681.0096 fax

LICENSED LANDSCAPE ARCHITECT
ANDREW SPURLOCK 1983
STATE OF CALIFORNIA
Signature
07/31/12
Renewal Date
Date

CONSULTANT

City of Santa Monica
Architecture Services
1437 4TH STREET, SUITE 300
SANTA MONICA, CA 90401
TEL. (310) 458-2205
FAX. (310) 399-1541
architecture@smgov.net

SUBMITTED BY: DATE: 20

APPROVED BY: Miriam Mulder, Architecture Services Manager DATE: 20

CITY OF SANTA MONICA
DEPARTMENT OF PUBLIC WORKS

REVIEWED BY: DATE: 20

REVIEWED BY: DATE: 20

REVIEWED BY: DATE: 20

CITY CLIENT

NO.	DATE	BY	DESCRIPTION

REVISIONS

ISSUE
65% CONSTRUCTION DOCUMENTS / BID SET

DATE
01/23/2012

DRAWING NO. **6693**

SHEET OF SHEETS

SHEET TITLE
Hardscape Details

SHEET NO.
L1.05

SHEET OF
DWG. NO. - -
TITLE OF PROJECT

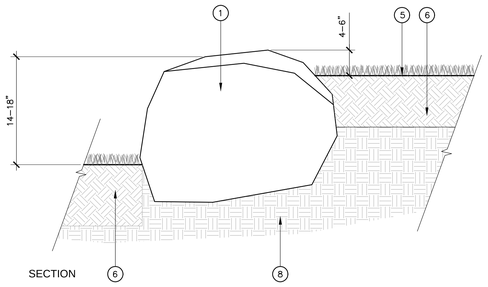

1 BOULDER TYPE 1 - RETAINING

1" = 1'–0"

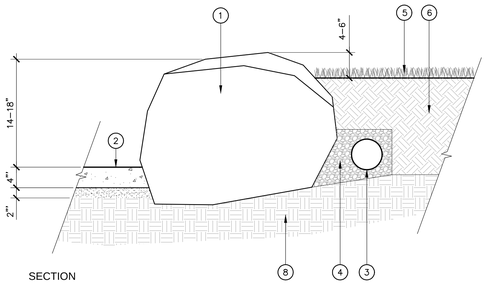

2 BOULDER TYPE 2 - RETAINING ADJACENT TO HARDSCAPE

1" = 1'–0"

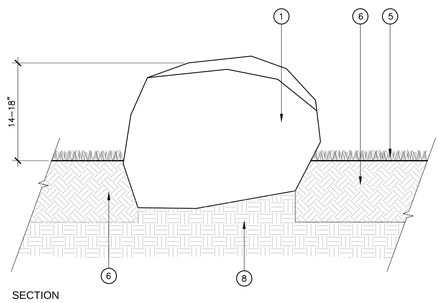

3 BOULDER TYPE 3

1" = 1'–0"

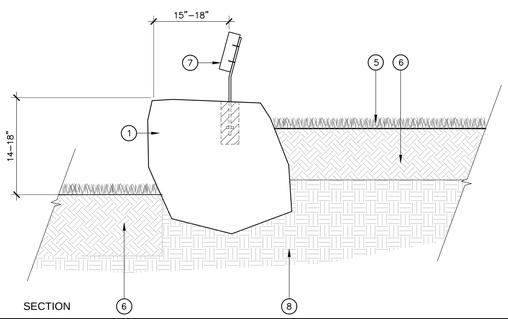

4 BOULDER TYPE 4 - RETAINING W/ SEAT BACK

1" = 1'–0"

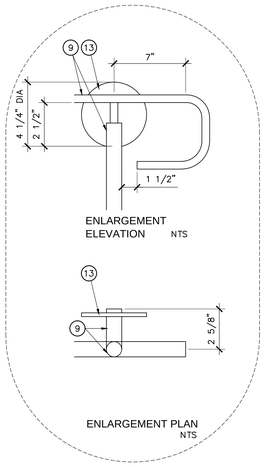

NOTE:
1. SEE CIVIL DRAWINGS FOR SLOPES AND GRADES

2. ANGLE NO LESS THAN 60 DEG. IS FROM THE HORIZONTAL OR RISERS SHALL BE SLOPED

3. NOSING SHALL NOT PROJECT MORE THAN 1 1/2" PAST THE RISER BELOW. SEC. 1133B.4.5.2

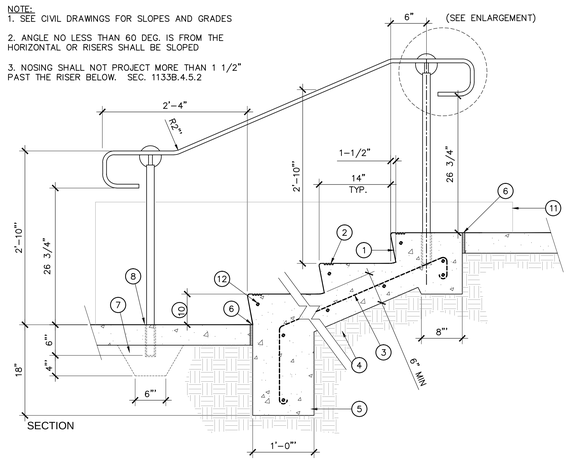

1. SMOOTH TROWEL FACE
2. WARNING GROOVES 1/4" DEEP X 1/4" WIDE WITH 4 GROOVES 2" TOTAL WIDTH. STAIN RED COLOR PER SPECIFICATIONS
3. #4 @ 12" O.C. BOTH WAYS, 3" CLEAR
4. COMPACTED GRADE PER GEOTECHNICAL REPORT
5. DEEP POUR EDGES (TYP.)
6. EXPANSION JOINT (1 / L1.03) (SIMILAR)
7. DEEP POUR PAVING FOR RAIL FOOTING
8. CORE DRILL AND SET W/ POR–ROK
9. REUSE EXISTING HANDRAIL AND POSTS; REPAINT PER LEGEND
10. RISERS PER CIVIL
11. CHEEK WALL BEYOND, SOME AREAS
12. # 3 CONT. 2" CLR TYP. AT NOSING
13. 1/4" STEEL ANTI–SKATE DISK WELD TO FRONT SIDE OF STEEL PLATE

5 CONCRETE STEPS WITH HANDRAILS, HANDRAIL FOR RAMP

1" = 1'–0"

1. BOULDER SEAT, LOCATIONS PER PLAN. BOULDER TO MATCH EXISTING ONSITE, TO BE SELECTED BY LANDSCAPE ARCHITECT. TO BE INSTALLED PER DETAIL. PLACE EACH BOULDER IN CONTACT WITH ADJACENT BOULDERS FOR RETAINING PURPOSE. BOULDERS TO BE SET AT MIN. 30% ±BELOW FINISH SURFACE ON LOW SIDE. REFER TO LEGEND FOR BOULDER SIZING.
2. ADJACENT FINISH SURFACE PER HARDSCAPE PLAN
3. WRAPPED, PERFORATED DRAIN PIPE. CONNECT TO STORM DRAIN; REFER TO CIVIL ENGINEER DRAWINGS
4. 3/4" CRUSHED ROCK BACKFILL AROUND PERFORATED PIPE
5. PLANT MATERIAL PER PLANTING PLAN
6. AMMENDED SITE SOIL PER SPECIFICATIONS
7. CUSTOM BENCH, PER 4/L.05
8. COMPACTED SUBGRADE PER GEOTECHNICAL REPORT

NOTES:

1. LANDSCAPE ARCHITECT TO OBSERVE AND APPROVE CORRECT LOCATIONS OF BOULDERS PRIOR TO INSTALLATION.
2. BOULDER TO BE PLACED SO THAT A FLAT SURFACE FACES UP, WITH NO PROTRUSIONS EXTENDING VERTICALLY OR ROUGH EDGES EXPOSED.
3. CONCRETE CONNECTION BETWEEN BOULDER AND FINISH SURFACE SHALL BE TIGHT AND SHOW NO SEPARATION (BOULDER TO BE PLACED FIRST)
4. BOULDER SEAT BENCH:
   1) MANUFACTURER: TIMBERFORM SITE FURNISHINGS, 800–547–1940
   2) INSTALL BENCHES PER MANUFACTURER'S SPECIFICATIONS
   3) REFER TO LEGEND FOR MODEL NUMBER

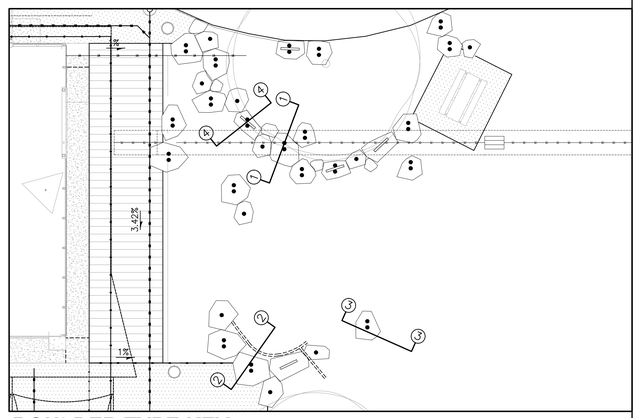

BOULDER TYPE KEY

1" = 10'–0"

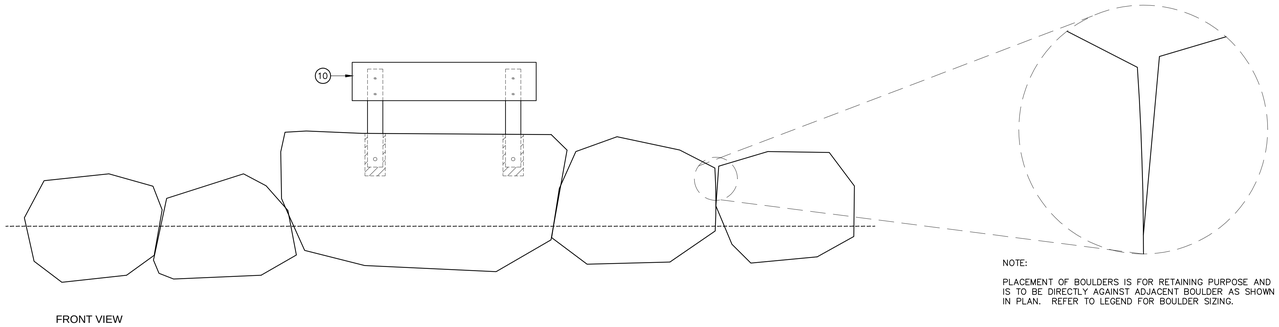

NOTE:

PLACEMENT OF BOULDERS IS FOR RETAINING PURPOSE AND IS TO BE DIRECTLY AGAINST ADJACENT BOULDER AS SHOWN IN PLAN. REFER TO LEGEND FOR BOULDER SIZING.

PICO BRANCH LIBRARY

Virginia Avenue Park
Santa Monica, CA 90404

PROJECT

KoningEizenbergArchitecture
1454 25th St, Santa Monica, CA 90404

310.828.6131 info@kearch.com
310.828.0719 fax www.kearch.com

ARCHITECT'S PROJECT NO.
1001

ARCHITECT

All designs, ideas, arrangements and plans indicated by these drawings are the property and copyright of the Architect and shall neither be used on any other work nor be disclosed to any other person for any use whatsoever without written permission.

Koning Eizenberg Architecture and/or its principals and employees waives any and all liability or responsibility for problems that may occur when these plans, drawings, specifications, and/or designs are followed without the professional's guidance with ambiguities, or conflicts which are alleged.

SPURLOCK POIRIER
Landscape Architects

2102 Hancock Street
San Diego, CA 92110
619.681.0090
619.681.0096 fax

LICENSED LANDSCAPE ARCHITECT
ANDREW SPURLOCK – 1983
STATE OF CALIFORNIA
Signature
07/31/12
Renewal Date
Date

CONSULTANT

City of Santa Monica
Architecture Services

1437 4TH STREET, SUITE 300
SANTA MONICA, CA 90401
TEL. (310) 458-2205
FAX. (310) 399-1541
architecture@smgov.net

DATE : 20
SUBMITTED BY :

DATE : 20
APPROVED BY :
Miriam Mulder,
Architecture Services Manager

CITY OF SANTA MONICA
DEPARTMENT OF PUBLIC WORKS

REVIEWED BY : DATE : 20

REVIEWED BY : DATE : 20

REVIEWED BY : DATE : 20

CITY CLIENT

NO.	DATE	BY	DESCRIPTION

REVISIONS

ISSUE
65% CONSTRUCTION DOCUMENTS / BID SET

DATE
01/23/2012

DRAWING NO. **6693**

SHEET OF SHEETS

SHEET TITLE
Hardscape Details

SHEET NO.
L1.06

SHEET OF

DWG. NO. :

TITLE OF PROJECT :

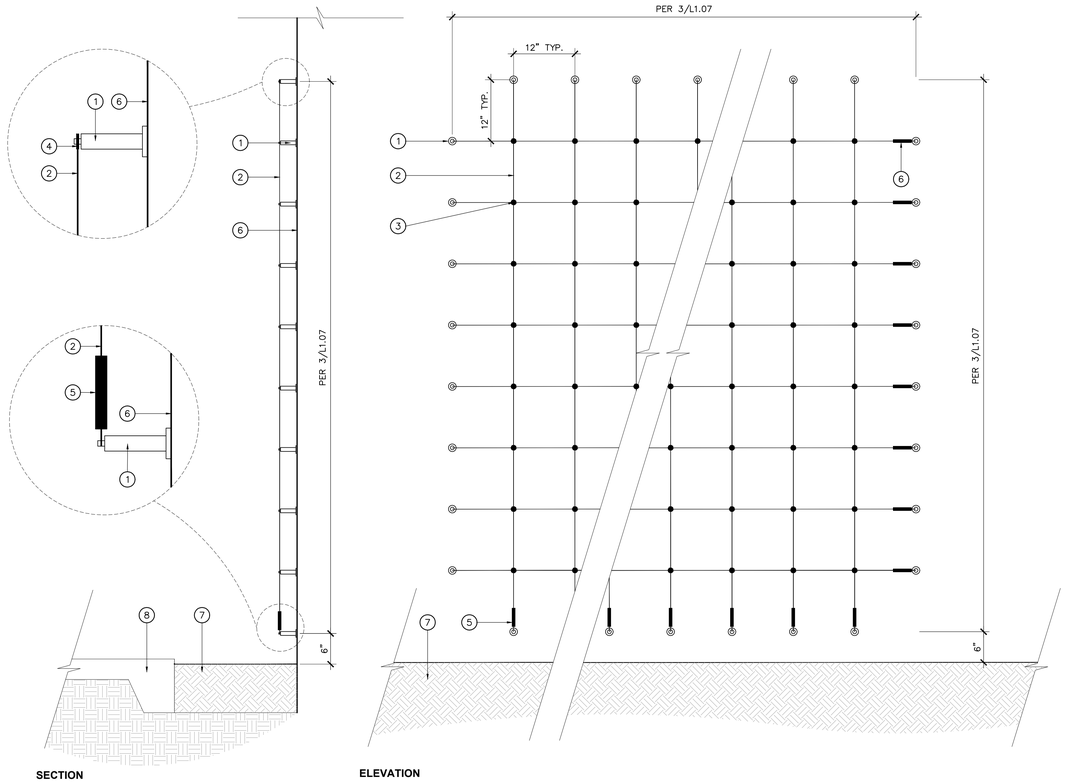

1. 3" STAINLESS STEEL SPACERS, MOUNTED TO WALL
2. 4.0 MM STAINLESS STEEL ROPE, TENSION PER MANUFACTURER SPECIFICATIONS
3. 90 DEGREE CROSS CLAMPS
4. STAINLESS STEEL "GREENGUIDE" EYES
5. STAINLESS STEEL TURNBUCKLE
6. BUILDING WALL, PER ARCHITECT
7. ADJACENT PLANTING AREA WITH AMENDED SOIL, PER HARDSCAPE PLAN
8. ADJACENT CONCRETE PAVING, PER HARDSCAPE PLAN

NOTES:

1. INSTALL PER MANUFACTURER'S DIRECTIONS
2. REFER TO ARCHITECTURAL FOR BUILDING ATTACHMENT DETAIL

1 CABLE VINE TRELLIS

1" = 1'-0"

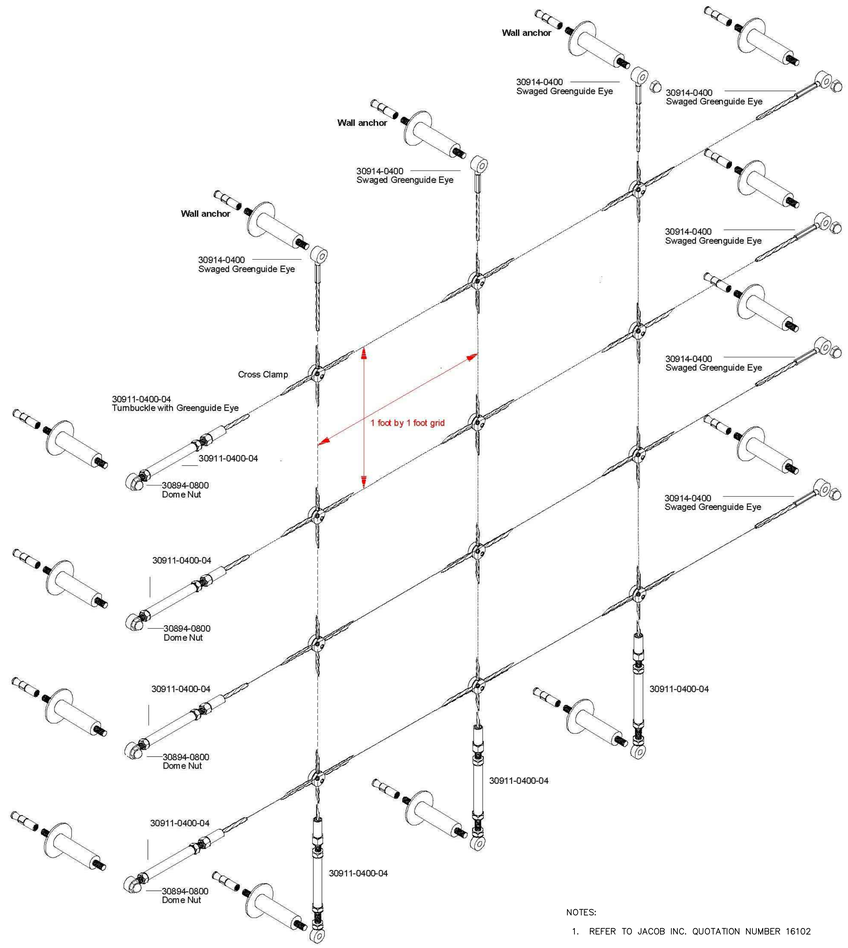

NOTES:

1. REFER TO JACOB INC. QUOTATION NUMBER 16102

2 CABLE VINE TRELLIS COMPONENTS

N.T.S.

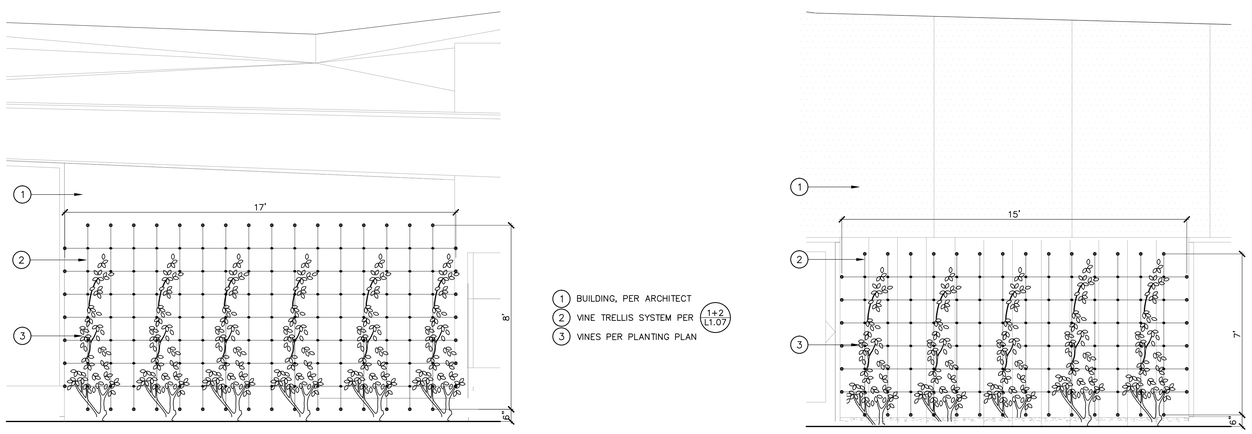

1. BUILDING, PER ARCHITECT
2. VINE TRELLIS SYSTEM PER 1+2 / L1.07
3. VINES PER PLANTING PLAN

3 CABLE VINE TRELLIS ELEVATIONS

3/8" = 1'-0"

PICO BRANCH LIBRARY

Virginia Avenue Park
Santa Monica, CA 90404

PROJECT

KoningEizenbergArchitecture
1454 25th St, Santa Monica, CA 90404
310.828.6131 info@kearch.com
310.828.0719 fax www.kearch.com

ARCHITECT'S PROJECT NO.
1001

ARCHITECT

All designs, ideas, arrangements and plans indicated by these drawings are the property and copyright of the Architect and shall neither be used on any other work nor be disclosed to any other person for any use whatsoever without written permission.

Koning Eizenberg Architecture and/or its principals and employees waives any and all liability or responsibility for problems that may occur when these plans, drawings, specifications, and/or designs are followed without the professional's guidance with ambiguities, or conflicts which are alleged.

SPURLOCK POIRIER
Landscape Architects
2122 Hancock Street
San Diego, CA 92110
619.681.0090
619.681.0096 fax

LICENSED LANDSCAPE ARCHITECT
ANDREW SPURLOCK – 1865
Signature
07/31/12
Renewal Date
Date
STATE OF CALIFORNIA

CONSULTANT

City of Santa Monica
Architecture Services
1437 4TH STREET, SUITE 300
SANTA MONICA, CA 90401
TEL. (310) 458-2205
FAX. (310) 399-1541
architecture@smgov.net

DATE : _____ 20 __
SUBMITTED BY :

DATE : _____ 20 __
APPROVED BY :
Miriam Mulder,
Architecture Services Manager
CITY OF SANTA MONICA
DEPARTMENT OF PUBLIC WORKS

REVIEWED BY : DATE : _____ 20 __

REVIEWED BY : DATE : _____ 20 __

REVIEWED BY : DATE : _____ 20 __

CITY CLIENT

NO.	DATE	BY	DESCRIPTION

REVISIONS

ISSUE
65% CONSTRUCTION DOCUMENTS / BID SET

DATE
01/23/2012

DRAWING NO. **6693**

SHEET OF SHEETS

SHEET TITLE
ELEVATIONS

SHEET NO.
L1.07

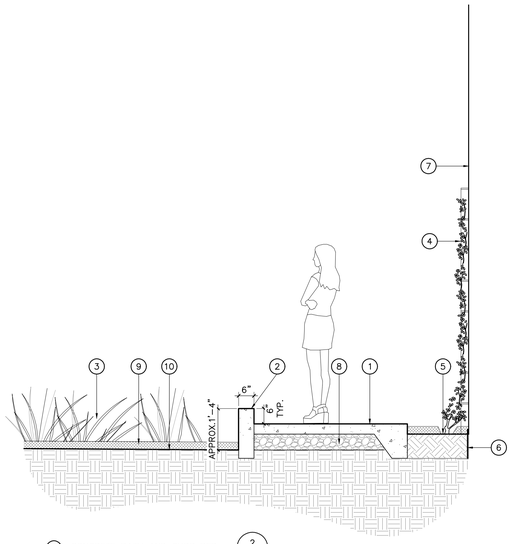

1. CONCRETE PATH AND CURB PER (2/L1.03)
2. RAISED CONCRETE CURB PER (6/L1.03)
3. NEW PLANTING AREA IN EXISTING GRADE
4. CABLE VINE TRELLIS PER (1-3/L1.07)
5. VINE TRELLIS PLANTING ADJACENT TO BUILDING
6. WATERPROOFING ADJACENT TO PLANTING PER ARCHITECT
7. WALL OF BUILDING AND WATERPROOFING, PER ARCHITECT
8. COMPACTED AGGREGATE BASE ON RECOMPACTED SUBGRADE PER GEOTECHNICAL REPORT
9. MULCH PER PLANS
10. EXISTING GRADE

1 SECTION A-A'

1/2" = 1'-0"

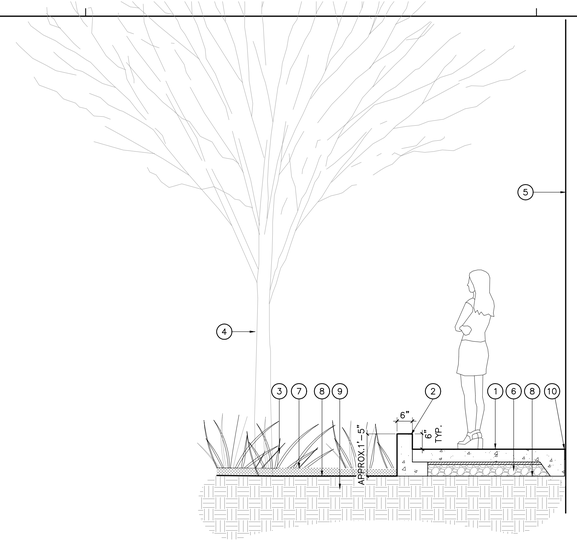

1. POROUS CONCRETE PATH PER (5/L1.03)
2. "L" SHAPED RAISED CURB SITTING ON GRADE, DO NOT REGRADE
3. NEW PLANTING AREA IN EXISTING GRADE, DO NOT REGRADE
4. EXISTING TREE AND ROOTS TO REMAIN PROTECTED IN PLACE, DO NOT RECOMPACT WITHIN TREE PROTECTION ZONE – REFER TO PLAN FOR EXTENT
5. WALL OF BUILDING AND WATERPROOFING, PER ARCHITECT
6. GRAVEL BASE ON EXISTING GRADE
7. MULCH PER PLANS
8. EXISTING GRADE
9. EXISTING SUBGRADE, DO NOT RECOMPACT
10. EXPANSION JOINT

2 SECTION B-B'

1/2" = 1'-0"

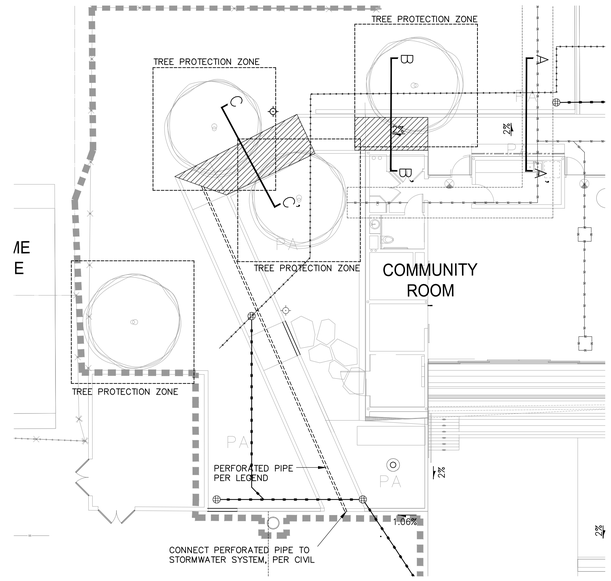

KEY PLAN

1"=10'-0"

LEGEND

AREA FOR PAVING, EDGING, AND GRAVEL BASE SITTING ON GRADE WITH NO SUBGRADE RECOMPACTION

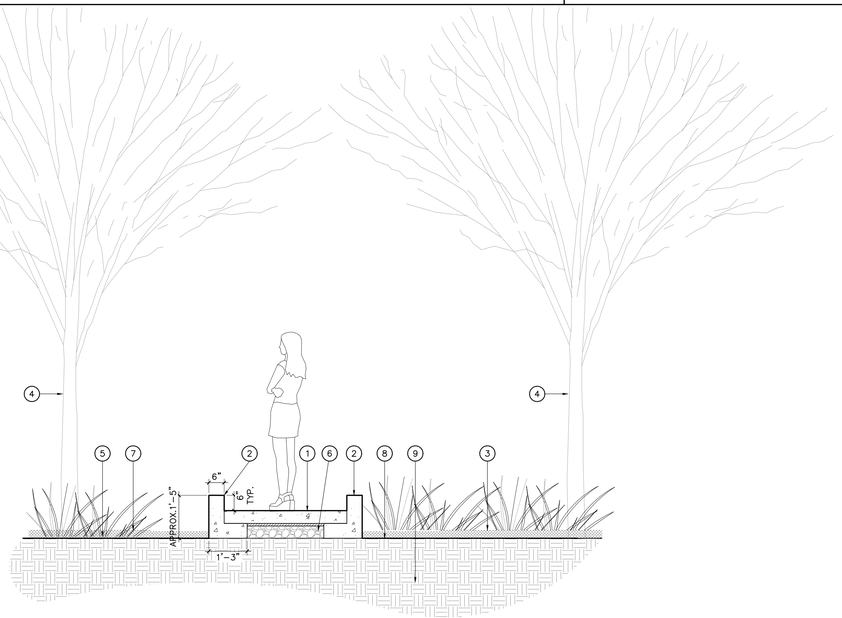

1. POROUS CONCRETE PATH PER (5/L1.03)
2. "L" SHAPED RAISED CURB SITTING ON GRADE
3. NEW PLANTING AREA IN EXISTING GRADE, DO NOT REGRADE
4. EXISTING TREE AND ROOTS TO REMAIN PROTECTED IN PLACE, DO NOT RECOMPACT IN WITHIN TREE PROTECTION ZONE
5. EXISTING PLANTING AREA
6. GRAVEL BASE ON EXISTING GRADE
7. MULCH PER PLANS
8. EXISTING GRADE
9. EXISTING SUBGRADE, DO NOT RECOMPACT

NOTES:
1. INSTALL EXPANSION JOINTS AT CURB TYPE TRANSITIONS, BUILDING FACE, AND AS SHOWN ON PLANS (MAXIMUM 20'-0" O.C.)
2. PROVIDED DOWELS AT ADJACENT POURS PER (2/L1.03)

3 SECTION C-C'

1/2" = 1'-0"

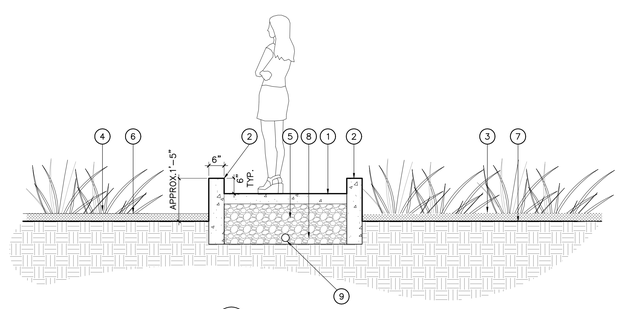

1. POROUS CONCRETE PATH PER (5/L1.03)
2. RAISED CONCRETE CURB (6/L1.03)
3. NEW PLANTING AREA IN EXISTING GRADE, DO NOT REGRADE
4. EXISTING PLANTING AREA
5. FULL DEPTH GRAVEL BASE PER CIVIL
6. MULCH PER PLANS
7. EXISTING GRADE
8. RECOMPACTED SUBGRADE PER GEOTECHNICAL REPORT
9. PERFORATED PIPE PER PLANS AND CIVIL

4 TYPICAL SECTION, OUTSIDE TREE PROTECTION ZONE

1/2" = 1'-0"

PICO BRANCH LIBRARY

Virginia Avenue Park
Santa Monica, CA 90404

PROJECT

KoningEizenbergArchitecture
1454 25th St, Santa Monica, CA 90404
310.828.6131 info@kearch.com
310.828.0719 fax www.kearch.com

ARCHITECT'S PROJECT NO.
1001

ARCHITECT

All designs, ideas, arrangements and plans indicated by these drawings are the property and copyright of the Architect and shall neither be used on any other work nor be disclosed to any other person for any use whatsoever without written permission.

Koning Eizenberg Architecture and/or its principals and employees waives any and all liability or responsibility for problems that may occur when these plans, drawings, specifications, and/or designs are followed without the professional's guidance with ambiguities, or conflicts which are alleged.

SPURLOCK POIRIER
Landscape Architects
2102 Hancock Street
San Diego, CA 92110
619.681.0090
619.681.0096 fax

LICENSED LANDSCAPE ARCHITECT
ANDREW SPURLOCK – 1903
Signature
07/31/12
Renewal Date
Date
STATE OF CALIFORNIA

CONSULTANT

City of Santa Monica
Architecture Services
1437 4TH STREET, SUITE 300
SANTA MONICA, CA 90401
TEL. (310) 458-2205
FAX. (310) 399-1541
architecture@smgov.net

DATE : _____ 20 __
SUBMITTED BY :

DATE : _____ 20 __
APPROVED BY :
Miriam Mulder,
Architecture Services Manager

CITY OF SANTA MONICA
DEPARTMENT OF PUBLIC WORKS

REVIEWED BY : DATE : _____ 20 __

REVIEWED BY : DATE : _____ 20 __

REVIEWED BY : DATE : _____ 20 __

CITY CLIENT

NO.	DATE	BY	DESCRIPTION

REVISIONS

ISSUE
65% CONSTRUCTION DOCUMENTS / BID SET

DATE
01/23/2012

DRAWING NO. **6693**

SHEET OF SHEETS

SHEET TITLE
SECTIONS

SHEET NO.
L1.08

SHEET OF
DWG. NO. :
TITLE OF PROJECT :

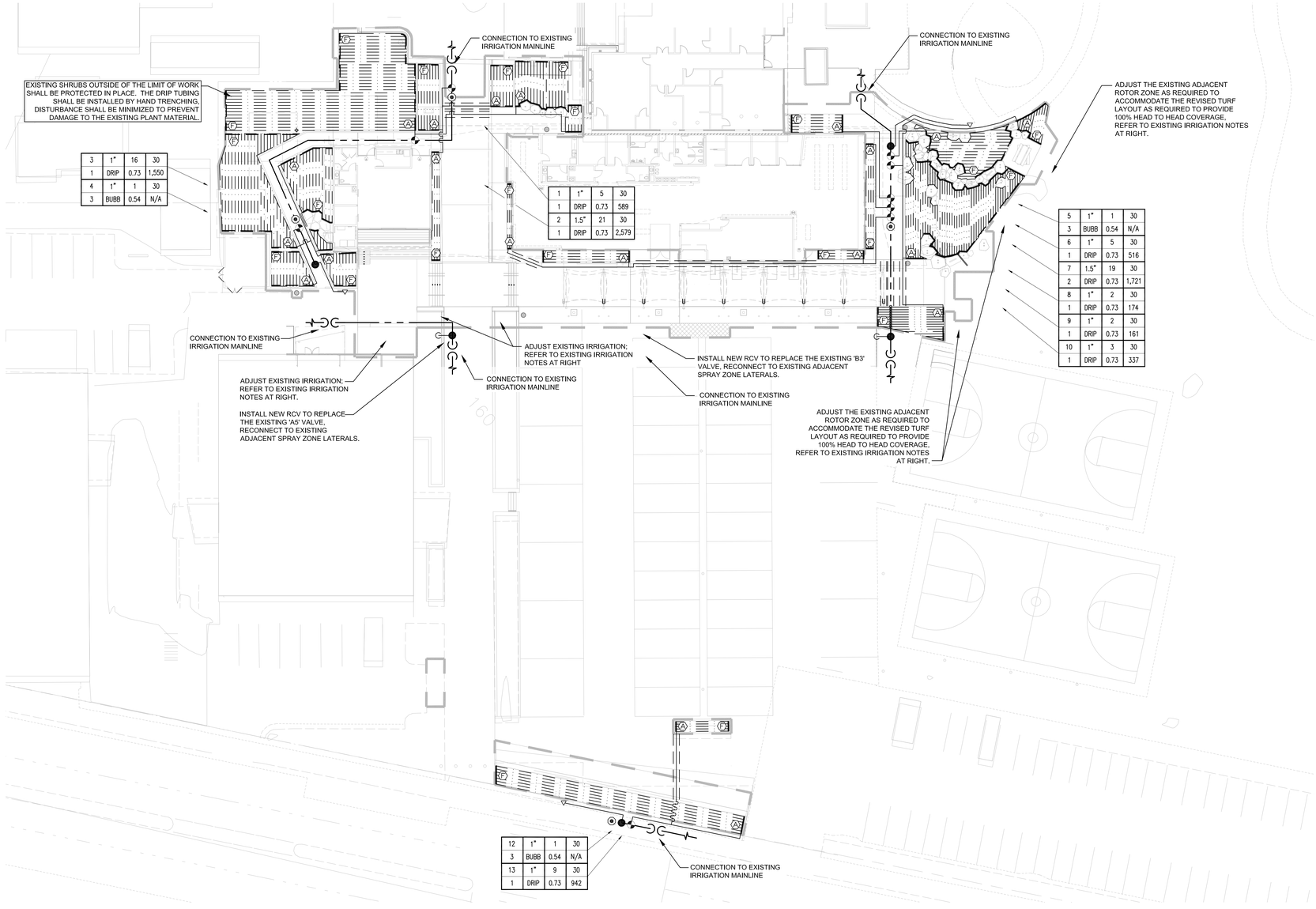

3	1"	16	30
1	DRIP	0.73	1,550
4	1"	1	30
3	BUBB	0.54	N/A

1	1"	5	30
1	DRIP	0.73	589
2	1.5"	21	30
1	DRIP	0.73	2,579

5	1"	1	30
3	BUBB	0.54	N/A
6	1"	5	30
1	DRIP	0.73	516
7	1.5"	19	30
2	DRIP	0.73	1,721
8	1"	2	30
1	DRIP	0.73	174
9	1"	2	30
1	DRIP	0.73	161
10	1"	3	30
1	DRIP	0.73	337

12	1"	1	30
3	BUBB	0.54	N/A
13	1"	9	30
1	DRIP	0.73	942

EXISTING IRRIGATION NOTES

NOTE 1:
CONTRACTOR SHALL MAINTAIN EXISTING MAINLINES IN WORKING ORDER. COORDINATE ALL INTERRUPTIONS OF OPERATION OF THE EXISTING IRRIGATION TO A MINIMUM. COORDINATE ALL INTERRUPTIONS WITH THE OWNER'S REPRESENTATIVE.

NOTE 2:
CONTRACTOR SHALL BE RESPONSIBLE FOR ALL EXISTING IRRIGATION EQUIPMENT DAMAGED DURING CONSTRUCTION AND IF DAMAGED, SHALL REPLACE WITH SAME MANUFACTURER AND MODEL.

NOTE 3:
ANY EXISTING IRRIGATION CONTROL VALVES CONNECTED TO EXISTING CONTROLLER SHALL BE RECONNECTED TO EXISTING CONTROLLER. CONFIRM PROPER CONTROLLER OPERATION AND INSTALLATION WITH OWNER'S AUTHORIZED REPRESENTATIVE PRIOR TO COMMENCING WORK AND UPON COMPLETION OF WORK.

NOTE 4:
CONTRACTOR SHALL CONFIRM THE EXISTING CONTROLLER MAKE AND MODEL AND SHALL CONFIRM THAT SAID CONTROLLER HAS ADEQUATE OPEN STATIONS TO OPERATE ANY ADJUSTED AND ALL PROPOSED IRRIGATION SYSTEM MODIFICATIONS. NOTIFY OWNER'S AUTHORIZED REPRESENTATIVE SHOULD ANY DISCREPANCIES BE NOTED.

NOTE 5:
CONTRACTOR SHALL BE RESPONSIBLE FOR REPAIR/MODIFICATION/REROUTING OF ALL ADJACENT IRRIGATION SYSTEM EQUIPMENT THAT IS AFFECTED BY NEW CONSTRUCTION IMPROVEMENTS. CONTRACTOR SHALL REPAIR SAID SYSTEMS TO A LIKE NEW MANNER, PROVIDING NO LESS THAN 100% OF HEAD RADIUS COVERAGE IN ALL AREAS WITH SYSTEM LAYOUT AS APPROVED BY OWNER'S AUTHORIZED REPRESENTATIVE. CONTRACTOR SHALL CONFIRM ALL AREAS REQUIRING MODIFICATION WITH OWNER'S AUTHORIZED REPRESENTATIVE PRIOR TO BIDDING WORK AND PRIOR TO COMMENCING WORK.

NOTE 6:
CONTRACTOR SHALL BE RESPONSIBLE FOR THE COMPLETE REMOVAL AND DISPOSAL OF ALL EXISTING IRRIGATION EQUIPMENT AFFECTED BY THE NEW CONSTRUCTION IMPROVEMENTS, IF NECESSARY. CONTRACTOR SHALL VERIFY ALL EQUIPMENT TO BE REMOVED AND DISPOSED OF IN FIELD PRIOR TO BIDDING WORK AND PRIOR TO COMMENCING WORK.

NOTE 7:
CONTRACTOR SHALL FIELD VERIFY DEPTH AND LOCATION OF ALL EXISTING UTILITIES PRIOR TO BIDDING WORK AND AGAIN PRIOR TO COMMENCING WORK. VERIFICATION SHALL BE DOCUMENTED AND DELIVERED TO OWNER'S REPRESENTATIVE.

NOTE 8:
CONTRACTOR SHALL BE RESPONSIBLE FOR THE PLACEMENT OF ALL SCH. 40 PVC SLEEVING UNDER PAVING, WALLS AND CURBS AT NO LESS THAN 24" BELOW GRADE AND NO LESS THAN 2X DIAMETER OF IRRIGATION PIPE IN AREAS WHERE PIPE CROSSING WILL OCCUR. WHEN PIPE SIZE IS NOT AVAILABLE USE 6" SLEEVING MATERIAL. CONFIRM CROSSINGS WITH OWNER'S REPRESENTATIVE PRIOR TO PAVING AND HARDSCAPE CONSTRUCTION.

NOTE 9:
EXISTING IRRIGATION IN THIS AREA SHALL BE PROTECTED IN PLACE FOR CONTINUED USE. CONTRACTOR SHALL VERIFY THE EXTENT OF THE EXISTING SYSTEM AND MAKE ADJUSTMENTS TO CAP OFF OR MODIFY THE EXITING SYSTEM TO MEET THE NEW LANDSCAPE CONDITION IF NECESSARY.

NOTE 10:
CONTRACTOR SHALL EXERCISE EXTREME CAUTION WHEN WORKING WITHIN THE DRIPLINE OF EXISTING TREES. NO MECHANICAL TRENCHING WITHIN THE DRIPLINE OF THE EXISTING TREE WILL BE ALLOWED. CONTRACTOR SHALL REFER TO ARBORIST REPORT FOR ADDITIONAL PRECAUTIONS REQUIRED FOR THE EXISTING TREES. VERIFY ALL LAYOUT IN FIELD WITH OWNER'S AUTHORIZED REPRESENTATIVE.

NOTE 11:
CONTRACTOR SHALL BE RESPONSIBLE FOR LOCATING EXISTING BACKFLOW DEVICE AND TESTING FOR PROPER OPERATION. SHOULD BACKFLOW DEVICE BE INOPERABLE OR NOT IN PLACE CONTRACTOR SHALL BE RESPONSIBLE FOR REPAIR OR REPLACEMENT OF SAID BACKFLOW DEVICE. CONFIRM ANY DISCREPANCIES WITH OWNER'S AUTHORIZED REPRESENTATIVE PRIOR TO BIDDING WORK AND PRIOR TO COMMENCING WORK.

NOTE 12:
CONTRACTOR SHALL ADD CHECK VALVES AS NECESSARY TO PREVENT LOW HEAD DRAINAGE.

PROPOSED IRRIGATION NOTES

NOTE A:
POINT OF CONNECTION SHALL BE TO THE EXISTING VIRGINIA AVENUE PARK SITE IRRIGATION SYSTEM. CONTRACTOR SHALL CONNECT TO EXISTING IRRIGATION MAINLINE IN THE APPROXIMATE LOCATIONS SHOWN. CONTRACTOR SHALL ROUTE NEW CONTROL WIRE FROM PROPOSED VALVES BACK TO EXISTING IRRIGATION CONTROLLER. VERIFY THE ACTUAL LOCATION, SIZE AND WATER PRESSURE IN THE FIELD PRIOR TO STARTING WORK. IF ANY OF THE POC INFORMATION SHOWN ON THESE DRAWING IS FOUND TO BE DIFFERENT THAN THE ACTUAL POC INFORMATION GATHERED IN THE FIELD, IMMEDIATELY NOTIFY THE LANDSCAPE ARCHITECT AND IRRIGATION CONSULTANT. SHOULD THE CONTRACTOR FAIL TO VERIFY THE POC INFORMATION ANY CHANGES REQUIRED BY LOW PRESSURE OR VOLUME SHALL BE THE SOLE RESPONSIBILITY OF THE CONTRACTOR.

NOTE B:
MAINLINE AND RELATED IRRIGATION EQUIPMENT SHOWN WITHIN PAVING FOR CLARITY ONLY. ACTUAL LOCATION OF MAINLINE AND RELATED IRRIGATION EQUIPMENT TO BE WITHIN PLANTER AND A MINIMUM OF 18" OFF ADJACENT HARDSCAPE AND OTHER OBSTACLES TYP.

NOTE C:
CONTRACTOR SHALL ADJUST ALL HEADS AS REQUIRED TO ACCOMMODATE ANY VERTICAL OBSTRUCTIONS THAT MAY OCCUR, INCLUDING BUT NOT LIMITED TO LIGHT POLES, FIRE HYDRANTS, ETC. VERIFY ALL HEAD LAYOUT WITH OWNER'S AUTHORIZED REPRESENTATIVE PRIOR TO STARTING WORK.

NOTE D:
BUBBLERS AND LATERAL LINES ARE SHOWN WITHIN PAVING FOR CLARITY ONLY, ACTUAL LOCATION TO BE WITHIN PLANTER. BUBBLERS SHALL BE ALIGNED WITH TREES AND AS DIRECTED BY OWNER'S AUTHORIZED REPRESENTATIVE. CONFIRM ALL LAYOUT IN FIELD WITH OWNER'S AUTHORIZED REPRESENTATIVE PRIOR TO STARTING WORK.

NOTE E:
CONTRACTOR SHALL EXERCISE EXTREME CAUTION WHEN WORKING WITHIN THE DRIPLINE OF EXISTING TREES. NO MECHANICAL TRENCHING WITHIN THE DRIPLINE OF THE EXISTING TREE WILL BE ALLOWED. AIR SPADE SHALL BE UTILIZED FOR ALL TRENCHING WITHIN THE DRIPLINE OF TREES. CONTRACTOR SHALL REFER TO ARBORIST REPORT FOR ADDITIONAL PRECAUTIONS REQUIRED FOR THE EXISTING TREES. VERIFY ALL LAYOUT IN FIELD WITH OWNER'S AUTHORIZED REPRESENTATIVE.

I HAVE COMPLIED WITH THE CRITERIA OF THE IRRIGATION GUIDELINES AND APPLIED THEM ACCORDINGLY FOR THE EFFICIENT USE OF WATER IN THE IRRIGATION DESIGN PLAN

sweeney + associates
IRRIGATION DESIGN AND CONSULTING
38730 Sky Canyon Drive, Suite C
Murrieta, Ca 92563
e: info@sweeneyassoc.com t: (951) 461-6830
w: www.sweeneyassoc.com f: (951) 461-6850

PROJECT

KoningEizenbergArchitecture
1454 25th St, Santa Monica, CA 90404
310.828.6131 info@kearch.com
310.828.0719 fax www.kearch.com

ARCHITECT'S PROJECT NO.

ARCHITECT

All designs, ideas, arrangements and plans indicated by these drawings are the property and copyright of the Architect and shall neither be used on any other work nor be disclosed to any other person for any use whatsoever without written permission.

Koning Eizenberg Architecture and/or its principals and employees waives any and all liability or responsibility for problems that may occur when these plans, drawings, specifications, and/or designs are followed without the professional's guidance with ambiguities, or conflicts which are alleged.

SPURLOCK POIRIER
Landscape Architects
2702 Hancock Street
San Diego, CA 92110
619.681.0090
619.681.0096 fax

LICENSED LANDSCAPE ARCHITECT
ANDREW SPURLOCK 4825
Signature
07/31/12
Renewal Date
Date
STATE OF CALIFORNIA

CONSULTANT

City of Santa Monica
Architecture Services
1437 4TH STREET, SUITE 300
SANTA MONICA, CA 90401
TEL. (310) 458-2205
FAX. (310) 399-1541
architecture@smgov.net

DATE : 20
SUBMITTED BY :

DATE : 20
APPROVED BY :
Miriam Mulder,
Architecture Services Manager

CITY OF SANTA MONICA
DEPARTMENT OF PUBLIC WORKS

REVIEWED BY : DATE : 20

REVIEWED BY : DATE : 20

REVIEWED BY : DATE : 20

CITY CLIENT

NO.	DATE	BY	DESCRIPTION

REVISIONS

ISSUE
65% CONSTRUCTION DOCUMENTS / BID SET

DATE

DRAWING NO. **6693**

SHEET OF SHEETS

SHEET TITLE
Irrigation Plan

SHEET NO.
L2.01

SHEET OF

DWG. NO. -

TITLE OF PROJECT:

IRRIGATION NOTES

1. ALL LOCAL MUNICIPAL AND STATE LAWS, RULES AND REGULATIONS GOVERNING OR RELATING TO ANY PORTION OF THIS WORK ARE HEREBY INCORPORATED INTO AND MADE A PART OF THESE SPECIFICATIONS AND THEIR PROVISIONS SHALL BE CARRIED OUT BY THE CONTRACTOR.
2. THE CONTRACTOR SHALL VERIFY THE LOCATIONS OF ALL EXISTING UTILITIES, STRUCTURES AND SERVICES BEFORE COMMENCING WORK. THE LOCATIONS OF UTILITIES, STRUCTURES AND SERVICES SHOWN IN THESE PLANS ARE APPROXIMATE ONLY. ANY DISCREPANCIES BETWEEN THESE PLANS AND ACTUAL FIELD CONDITIONS SHALL BE REPORTED TO THE OWNER'S REPRESENTATIVE.
3. THE CONTRACTOR SHALL OBTAIN THE PERTINENT ENGINEERING OR ARCHITECTURAL PLANS BEFORE BEGINNING WORK.
4. THE CONTRACTOR SHALL OBTAIN ALL NECESSARY PERMITS REQUIRED TO PERFORM THE WORK INDICATED HEREIN BEFORE BEGINNING WORK.
5. THIS DESIGN IS DIAGRAMMATIC. ALL EQUIPMENT SHOWN IN PAVED AREAS IS FOR DESIGN CLARITY ONLY AND IS TO BE INSTALLED WITHIN PLANTING AREAS.
6. THE CONTRACTOR SHALL NOT WILLFULLY INSTALL ANY EQUIPMENT AS SHOWN ON THE PLANS WHEN IT IS OBVIOUS IN THE FIELD THAT UNKNOWN CONDITIONS EXIST THAT WERE NOT EVIDENT AT THE TIME THESE PLANS WERE PREPARED. ANY SUCH CONDITIONS SHALL BE BROUGHT TO THE ATTENTION OF THE OWNER'S REPRESENTATIVE PRIOR TO ANY WORK OR THE IRRIGATION CONTRACTOR SHALL ASSUME ALL RESPONSIBILITY FOR ANY FIELD CHANGES DEEMED NECESSARY BY THE OWNER.
7. INSTALL ALL EQUIPMENT AS SHOWN IN THE DETAILS AND SPECIFICATIONS. CONTRACTOR SHALL BE RESPONSIBLE TO COMPLY WITH LOCAL CITY, COUNTY AND STATE REQUIREMENTS FOR BOTH EQUIPMENT AND INSTALLATION.
8. ACTUAL LOCATION FOR THE INSTALLATION OF THE BACKFLOW PREVENTER AND THE AUTOMATIC CONTROLLER IS TO BE DETERMINED IN THE FIELD BY THE OWNER'S AUTHORIZED REPRESENTATIVE.
9. CONTRACTOR IS TO PROVIDE AN ADDITIONAL PILOT WIRE FROM CONTROLLER ALONG ENTIRETY OF MAIN LINE TO THE LAST RCV ON EACH AND EVERY LEG OF MAIN LINE. LABEL SPARE WIRES AT BOTH ENDS.
10. ALL PIPE UNDER PAVED AREAS TO BE INSTALLED IN SLEEVING TWICE THE DIAMETER OF THE PIPE CARRIED. SEE LEGEND FOR TYPE. ALL WIRE UNDER PAVED AREAS TO BE INSTALLED IN A SCH. 40 SLEEVE THE SIZE REQUIRED TO EASILY PULL WIRE THROUGH. ALL SLEEVES TO BE INSTALLED WITH A MINIMUM DEPTH AS SHOWN ON THE SLEEVING DETAILS. SLEEVES TO EXTEND AT LEAST 12" PAST THE EDGE OF THE PAVING.
11. ALL QUICK COUPLER AND REMOTE CONTROL VALVES TO BE INSTALLED IN SHRUB OR GROUND COVER AREAS WHERE POSSIBLE. ALL QUICK COUPLER AND REMOTE CONTROL VALVES TO BE INSTALLED AS SHOWN ON THE INSTALLATION DETAILS. INSTALL ALL QUICK COUPLER AND REMOTE CONTROL VALVES WITHIN 18" OF HARDSCAPE.
12. ALL HEADS ARE TO BE INSTALLED WITH THE NOZZLE, SCREEN AND ARCS SHOWN ON THE PLANS. ALL HEADS ARE TO BE ADJUSTED TO PREVENT OVERSPRAY ONTO BUILDINGS, WALLS, FENCES AND HARDSCAPE. THIS INCLUDES, BUT NOT LIMITED TO, ADJUSTMENT OF DIFFUSER PIN OR ADJUSTMENT SCREW, REPLACEMENT OF PRESSURE COMPENSATING SCREENS, REPLACEMENT OF NOZZLES WITH MORE APPROPRIATE RADIUS UNITS AND THE REPLACEMENT OF NOZZLES WITH ADJUSTABLE ARC UNITS.
13. CONTRACTOR SHALL INSTALL ADDITIONAL CHECK VALVES TO HEADS AND LATERALS AS REQUIRED TO PREVENT LOW HEAD DRAINAGE.
14. THE CONTRACTOR SHALL USE PROPER GROUNDING TECHNIQUES FOR GROUNDING THE CONTROLLER AND RELATED EQUIPMENT PER MANUFACTURERS SPECIFICATIONS. SWEENEY AND ASSOCIATES RECOMMENDS MEASURING FOR PROPER GROUND AT LEAST ONCE ANNUALLY, AND NECESSARY ADJUSTMENTS MADE TO COMPLY WITH MANUFACTURER SPECIFICATIONS.

IRRIGATION MATERIAL LEGEND

SYMBOL	MANUFACT.	MODEL NO. / DESCRIPTION	GPM	PSI	RADIUS	PR (TRI.)	DETAIL
▽	HUNTER	1806-SAM-PRS-5F-B-PCS-040 POP-UP BUBBLER HEAD, EACH SYMBOL REPRESENTS TWO BUBBLERS PER TREE, PLACE BUBBLERS AT EDGE OF ROOTBALL ON OPPOSITE SIDES OF TREE. ADJUST PER ROOTBALL SIZE TYPICAL.	.40 (0.8)	30	N/A	N/A	A
	MATCO	B-4 BUTTERFLY VALVE WITH B4-LTCH LATCH NUT AND B4-IND INDEX PLATE, 3" AND 4" TO MATCH MAINLINE SIZE					B
	RAIN BIRD	33LRC QUICK COUPLER VALVE PLACED 100' O.C. FOR ENTIRE LENGTH OF MAINLINE					C
●	RAIN BIRD	EFB-CP (1", 1 1/2", 2") SERIES BRASS REMOTE CONTROL VALVE, SIZE AS SHOWN					D
	RAIN BIRD	EFB-CP (1", 1 1/2") SERIES DRIP REMOTE CONTROL VALVE ASSEMBLY, SIZE AS SHOWN INSTALL AG PRODUCTS 1" #4E-1AN-150, 1" MPT W/ MHT FLUSH & CAP 150 MESH WYE FILTER AND SENNINGER PRESSURE REGULATOR PMR-40MF FOR DEMANDS LESS THAN 18 GPM, AG PRODUCTS 1 1/2" SIZE #4E-11/2"-150, 11/2" MPT W/ MPT FLUSH AND BALL VALVE, 150 MESH WYE FILTER AND SENNINGER PR-40HF PRESSURE REGULATOR FOR DEMANDS GREATER THAN 18 GPM. INSTALL BOTH ON THE DOWNSTREAM SIDE OF EACH DRIP RCV					E
SHRUB / TURF	RAIN BIRD	XFS-P-06-12 PURPLE LANDSCAPE DRIP TUBING W/ .61 GPH EMITTERS 12" ON CENTER, INSTALL TUBING ROWS A MAXIMUM OF 12" APART IN TURF AREAS AND MAXIMUM OF 16" APART IN SHRUB AREAS. ALL TUBING SHALL BE INSTALLED 4" BELOW FINISHED SOIL GRADE W/ 9" WIRE STAKES FIVE (5) FEET ON CENTER; VERIFY THE LAYOUT AND SPACING IN THE FIELD PRIOR TO STARTING WORK					F,G,H
	RAIN BIRD	XF DRIPLINE FITTINGS W/ APPROPRIATE PVC FITTING FOR CONNECTION BETWEEN PVC LATERAL LINES AND DRIP TUBING					F,G,H
NO SYMBOL	TORO	ALL CONNECTIONS BETWEEN DRIP TUBING SHALL BE MADE USING "LOC-EZE" FITTINGS					F,G,H
Ⓕ	TORO	PROVIDE A T-FCH-H-FIPT AUTOMATIC FLUSH VALVE AT END/MIDDLE OF DRIPLINE 3/4" PCV FLUSH MANIFOLD LINE, INSTALL FLUSH VALVE INSIDE A SEPERATE VALVE BOX, ONE AT THE END OF TUBING RUNS IN EACH DIRECTION. INSTALL MIN. ONE FLUSH VALVE PER 1000' OF TUBING IN EACH DIRECTION ON DRIPLINE FLUSH MANIFOLD. INSTALL 18" FROM PAVING. INSTALL ALL FLUSH EQUIPMENT PER MANUFACTURER'S SPECIFICATIONS.					H,I
Ⓐ	TORO	T-YD-500-34 AIR/VACUUM RELIEF VALVE INSTALLED WITH A FT-050 COMBINATION TEE AND A 3/4" X 1/2" REDUCER BUSHING, INSTALL AIR RELIEF ASSEMBLY INSIDE A 6" ROUND VALVE BOX AT THE HIGH POINT OF EACH PLANTER, MIN. 1 ARV PER 500' OF DRIPLINE. USING AIR RELIEF LATERAL, CONNECT AIR RELIEF VALVE TO ALL DRIPLINE LATERALS WITHIN THE ELEVATED AREA. MULTIPLE ARV'S SHALL BE REQUIRED PER RCV WITHIN UNDULATING AREAS, VERIFY QUANTITY PRIOR TO STARTING WORK, INSTALL VALVE BOX 18" FROM PAVING AND AT HIGH POINTS OF PLANTER AREA. INSTALL ALL AIR VACUUM RELIEF EQUIPMENT PER MANUFACTURER'S SPECIFICATIONS.					H,J
	AS APPROVED	PVC PIPE 3/4" - 3" SCH. 40 AS LATERAL LINES 12" BELOW GRADE					K
	AS APPROVED	EXISTING IRRIGATION MAINLINE, PROTECT IN PLACE					N/A
	AS APPROVED	PVC PIPE 3" SCH. 40 SOLVENT WELD AS MAINLINES 24" BELOW GRADE					K
	AS APPROVED	PVC PIPE SCH. 40 AS SLEEVING, 2.5 TIMES THE DIAMETER OF PIPE OR WIRE BUNDLE CARRIED PLACE BELOW ALL PAVING, HARDSCAPE ETC. AND AS DIRECTED BY OWNER'S AUTHORIZED REPRESENTATIVE.					L
NO SYMBOL	AS APPROVED	IRRIGATION CONTROL WIRE #14UF AWG DIRECT BURIAL (U.L. APPROVED)					K,L,M
NO SYMBOL	3M	DBY-6 DIRECT BURIAL WATER-PROOF WIRE CONNECTORS FOR USE ON ALL WIRE CONNECTIONS (U.L. APPROVED)					M
NO SYMBOL	K.B.I.	KSC-XXX-S SWING CHECK VALVE, LINE SIZE, 1 DOWNSTREAM OF EACH RCV WHEN RCV IS LOWER THAN THE SPRINKLERS INSTALL WITHIN SPRINKER/DRIP ZONES AS REQUIRED TO PREVENT LOW HEAD/EMITTER DRAINAGE.					N/A
NO SYMBOL	K.B.I.	KC-XXX-S SPRING CHECK VALVE, LINE SIZE, 1 DOWNSTREAM OF EACH RCV IMMEDIATELY ABOVE FIRST LATERAL LINE TEE WHEN RCV IS HIGHER THAN THE SPRINKLERS, INSTALL WITHIN SPRINKER/DRIP ZONES AS REQUIRED TO PREVENT LOW HEAD/EMITTER DRAINAGE.					N/A
NO SYMBOL	NDS	PRO SERIES/PRO SERIES PLUS VALVE BOXES, SIZE PER EQUIPMENT DETAILS, LEGEND, AND SPECIFICATIONS. FOR FLUSH VALVES AND AIR RELIEF VALVES USE MODEL 208BC, 10" ROUND SHALL BE MODEL 312BCB, 14" X 19" STANDARD RECT. SHALL BE MODEL 314BCB, 13" X 20" JUMBO RECT. SHALL BE MODEL 318BCB 13" x 24" JUMBO RECT. SHALL BE MODEL 222BCB, 17" X 30" JUMBO RECT. SHALL BE MODEL 226BCB. VALVE BOXES SHALL HAVE GREEN BODY AND GREEN LIDS IN TURF, GREEN LIDS IN SHRUB BEDS, AND TAN LIDS IN ROCK MULCH. FOR USE IN NON-VEHICULAR TRAFFIC SITUATIONS ONLY. DO NOT INSTALL IN CONCRETE OR ASPHALT.					N/A

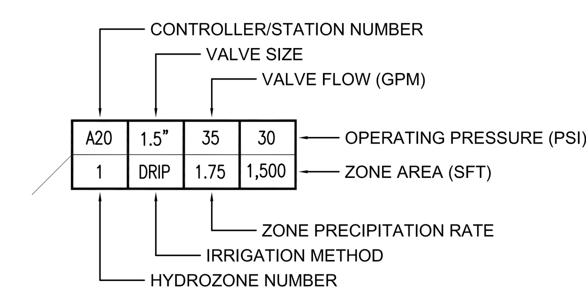

HYDROZONE	HYDROZONE DESCRIPTION
1	MIX WATER USE SHRUBS IRRIGATED WITH INLINE DRIP TUBING
2	TURF IRRIGATED WITH INLINE DRIP TUBING
3	TREES IRRIGATED IN SHRUBS WITH BUBBLER HEADS

IRR METHOD	IRRIGATION METHOD DESCRIPTION
BUBB	POP-UP BUBBLER HEADS
DRIP	SUB-SUEFACE DRIP IRRIGATION

sweeney + associates
IRRIGATION DESIGN AND CONSULTING
38730 Sky Canyon Drive, Suite C
Murrieta, Ca 92563
e: info@sweeneyassoc.com | t: (951) 461-6830
w: www.sweeneyassoc.com | f: (951) 461-6850

SHEET OF
DWG. NO. : -
TITLE OF PROJECT :

PROJECT

KoningEizenbergArchitecture
1454 25th St, Santa Monica, CA 90404
310.828.6131 info@kearch.com
310.828.0719 fax www.kearch.com
ARCHITECT'S PROJECT NO.

ARCHITECT

All designs, ideas, arrangements and plans indicated by these drawings are the property and copyright of the Architect and shall neither be used on any other work nor be disclosed to any other person for any use whatsoever without written permission.

Koning Eizenberg Architecture and/or its principals and employees waives any and all liability or responsibility for problems that may occur when these plans, drawings, specifications, and/or designs are followed without the professional's guidance with ambiguities, or conflicts which are alleged.

SPURLOCK POIRIER
Landscape Architects
2122 Hancock Street
San Diego, CA 92110
619.681.0090
619.681.0096 fax

LICENSED LANDSCAPE ARCHITECT
ANDREW SPURLOCK - 1865
Signature
07/31/12
Renewal Date
Date
STATE OF CALIFORNIA

CONSULTANT

City of Santa Monica
Architecture Services
1437 4TH STREET, SUITE 300
SANTA MONICA, CA 90401
TEL. (310) 458-2205
FAX. (310) 399-1541
architecture@smgov.net

DATE : 20
SUBMITTED BY :

DATE : 20
APPROVED BY :
Miriam Mulder,
Architecture Services Manager
CITY OF SANTA MONICA
DEPARTMENT OF PUBLIC WORKS

REVIEWED BY : DATE : 20

REVIEWED BY : DATE : 20

REVIEWED BY : DATE : 20

CITY CLIENT

NO.	DATE	BY	DESCRIPTION

REVISIONS

ISSUE
65% CONSTRUCTION DOCUMENTS / BID SET
DATE
DRAWING NO. **6693**
SHEET OF SHEETS
SHEET TITLE
Irrigation Legend
SHEET NO.
L2.02

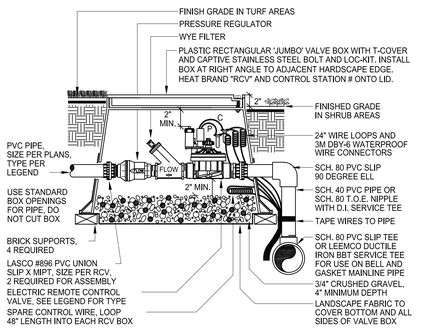

SECTION VIEW - N.T.S.

©copyright 2007 Sweeney & Associates, Inc.

(E) DRIP RCV ASSEMBLY

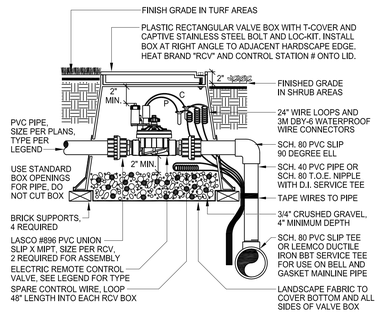

SECTION VIEW - N.T.S.

©copyright 2007 Sweeney & Associates, Inc.

(D) REMOTE CONTROL VALVE

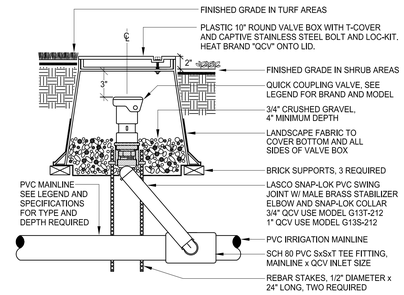

SECTION VIEW - N.T.S.

©copyright 2007 Sweeney & Associates, Inc.

NOTE:
USE AN APPROVED, NON-HARDENING, TEFLON ASSEMBLY PASTE ON ALL THREADED FITTINGS.

(C) QUICK COUPLER VALVE

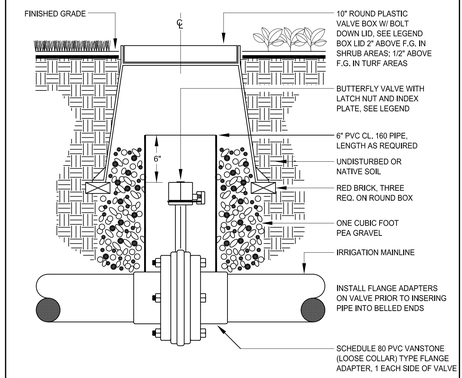

(B) BUTTERFLY VALVE

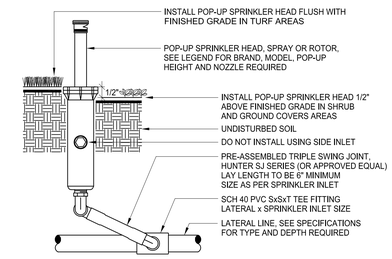

SECTION VIEW - N.T.S.

©copyright 2007 Sweeney & Associates, Inc.

NOTE:
INSTALL SPRINKLER HEADS 6" FROM PAVING EDGE IN SHRUB AND GROUND COVER AREAS.
INSTALL SPRINKLER HEADS 12" FROM THE FACE OF BUILDING WALLS OR WINDOWS.
INSTALL SPRINKLER HEADS 4" FROM PAVING EDGE IN TURF AREAS.

INSTALL SPRINKLER HEADS PLUMB. ADJUST SPRAYS OR NOZZLE STREAM TO COVER LANDSCAPE AREA WITHOUT OVERSPRAY ONTO PAVING, FENCES, WALLS OR BUILDINGS.

(A) POP-UP BUBBLER

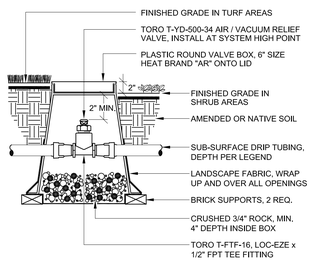

(J) AIR RELIEF VALVE

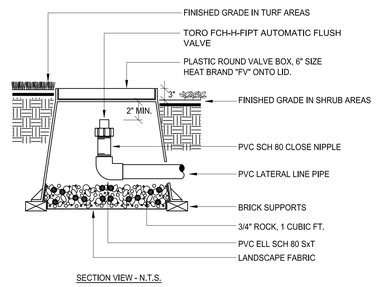

SECTION VIEW - N.T.S.

(I) FLUSH VALVE

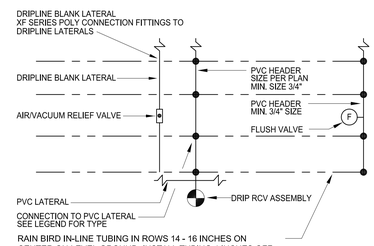

RAIN BIRD IN-LINE TUBING IN ROWS 14 - 16 INCHES ON CENTER ON LEVEL GROUND. INSTALL TUBING 4 INCHES OFF EDGE OF PLANTER.

INSTALL DRIP FLUSH VALVE PER DETAIL AT THE END OF EACH TUBING SECTION PER PLAN
INSTALL AIR RELIEF VALVES PER DETAIL, AT HIGH POINTS OF EACH TUBING SECTION PER PLAN.
RUN AIR/VACUUM RELIEF BLANK TUBING LATERAL ALONG HIGH POINT OF MOUND OR BERM.
ATTACH ALL IN-LINE DRIP TUBING TO BLANK LATERAL. MORE THAN TWO RELIEF VALVES MAY NEED TO BE INSTALLED PER SECTION

(H) DRIPLINE LAYOUT (PLAN)

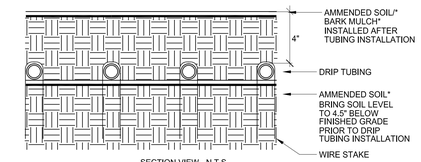

SECTION VIEW - N.T.S.

* AS PER LANDSCAPE DRAWINGS

RECOMMENDED INSTALLATION:

TO INSURE EVEN PARALLEL AND LEVEL TUBING ROWS IT IS RECOMMENDED THAT THE SOIL LEVEL IN THE PLANTER AREAS BE BROUGHT TO 4.5" BELOW FINISHED GRADE AND PROPERLY COMPACTED AS PER THE LANDSCAPED DRAWINGS PRIOR TO THE INSTALLATION OF THE TUBING.

INSTALL TUBING AS INDICATED ON THESE DRAWINGS AND SECURE TO GRADE USING WIRE HOOP STAKES AT 5 FEET ON CENTER SPACING.

BACKFILL FINAL 4" OF SOIL/BARK MULCH OVER THE TUBING AFTER INSTALLATION OF THE TUBING AND OBSERVATION BY THE OWNER'S AUTHORIZED REPRESENTATIVE.

(G) DRIPLINE LAYOUT (SECTION)

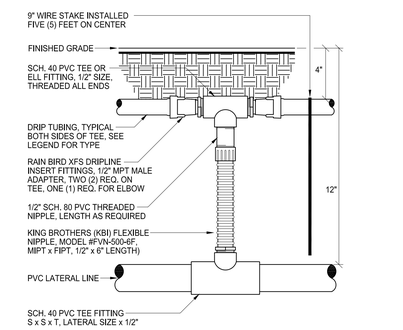

(F) DRIPLINE CONNECTION

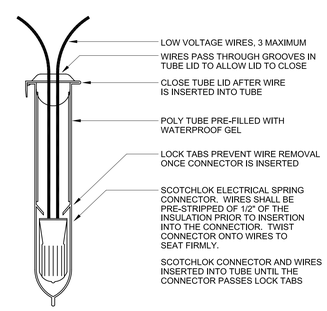

NOTE:
WIRE CONNECTOR SHALL BE A 3M DBY-6 DIRECT BURY SPLICE KIT (U.L. APPROVED).

KIT SHALL INCLUDE A SCOTCHLOK Y SPRING CONNECTOR, A POLYPROPYLENE TUBE AND A WATERPROOF SEALING GEL. TUBE SHALL BE SUPPLIED PREFILLED WITH GEL.

DIRECT BURY SPLICE KIT SHALL BE USED TO ELECTRICALLY CONNECT 2 - 3 #14 OR 2 #12 PRE-STRIPPED COPPER WIRES. LARGER WIRES OR GREATER QUANTITIES OF WIRES SHALL REQUIRE A LARGER APPROVED WIRE CONNECTION.

SECTION VIEW - N.T.S.

(M) WIRE CONNECTORS

NOTE:
SLEEVES TO EXTEND AT LEAST 12" PAST THE EDGE OF THE PAVING.

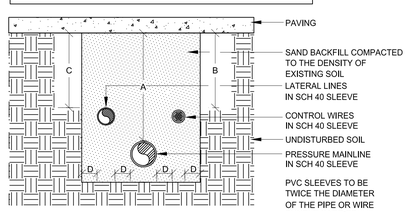

DIMENSION	A	B	C	D
1/2" TO 6" IN SIZE	36"	24"	24"	4"

SECTION VIEW - N.T.S.

(L) SLEEVE INSTALLATION

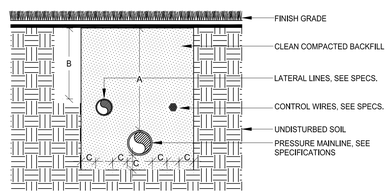

DIMENSION	A	B	C
1/2" TO 2-1/2" IN SIZE	18"	12"	4"
3" TO 6" IN SIZE	24"		4"

SECTION VIEW - N.T.S.

(K) PIPE INSTALLATION

sweeney + associates
IRRIGATION DESIGN AND CONSULTING
38730 Sky Canyon Drive, Suite C
Murrieta, Ca 92563
e: info@sweeneyassoc.com|t: (951) 461-6830
w: www.sweeneyassoc.com|f: (951) 461-6850

PROJECT

KoningEizenbergArchitecture
1454 25th St, Santa Monica, CA 90404
310.828.6131 info@kearch.com
310.828.0719 fax www.kearch.com

ARCHITECT'S PROJECT NO.

ARCHITECT

All designs, ideas, arrangements and plans indicated by these drawings are the property and copyright of the Architect and shall neither be used on any other work nor be disclosed to any other person for any use whatsoever without written permission.

Koning Eizenberg Architecture and/or its principals and employees waives any and all liability or responsibility for problems that may occur when these plans, drawings, specifications, and/or designs are followed without the professional's guidance with ambiguities, or conflicts which are alleged.

SPURLOCK POIRIER
Landscape Architects
2702 Hancock Street
San Diego, CA 92110
619.681.0090
619.681.0096 fax

LICENSED LANDSCAPE ARCHITECT
ANDREW SPURLOCK
Signature
07/31/12
Renewal Date
Date
STATE OF CALIFORNIA

CONSULTANT

City of Santa Monica Architecture Services
1437 4TH STREET, SUITE 300
SANTA MONICA, CA 90401
TEL. (310) 458-2205
FAX. (310) 399-1541
architecture@smgov.net

DATE : 20
SUBMITTED BY :

DATE : 20
APPROVED BY :
Miriam Mulder,
Architecture Services Manager
CITY OF SANTA MONICA
DEPARTMENT OF PUBLIC WORKS

REVIEWED BY : DATE : 20

REVIEWED BY : DATE : 20

REVIEWED BY : DATE : 20

CITY CLIENT

NO.	DATE	BY	DESCRIPTION

REVISIONS

ISSUE
65% CONSTRUCTION DOCUMENTS / BID SET
DATE

DRAWING NO. **6693**
SHEET OF SHEETS
SHEET TITLE
Irrigation Details

SHEET NO.
L2.03

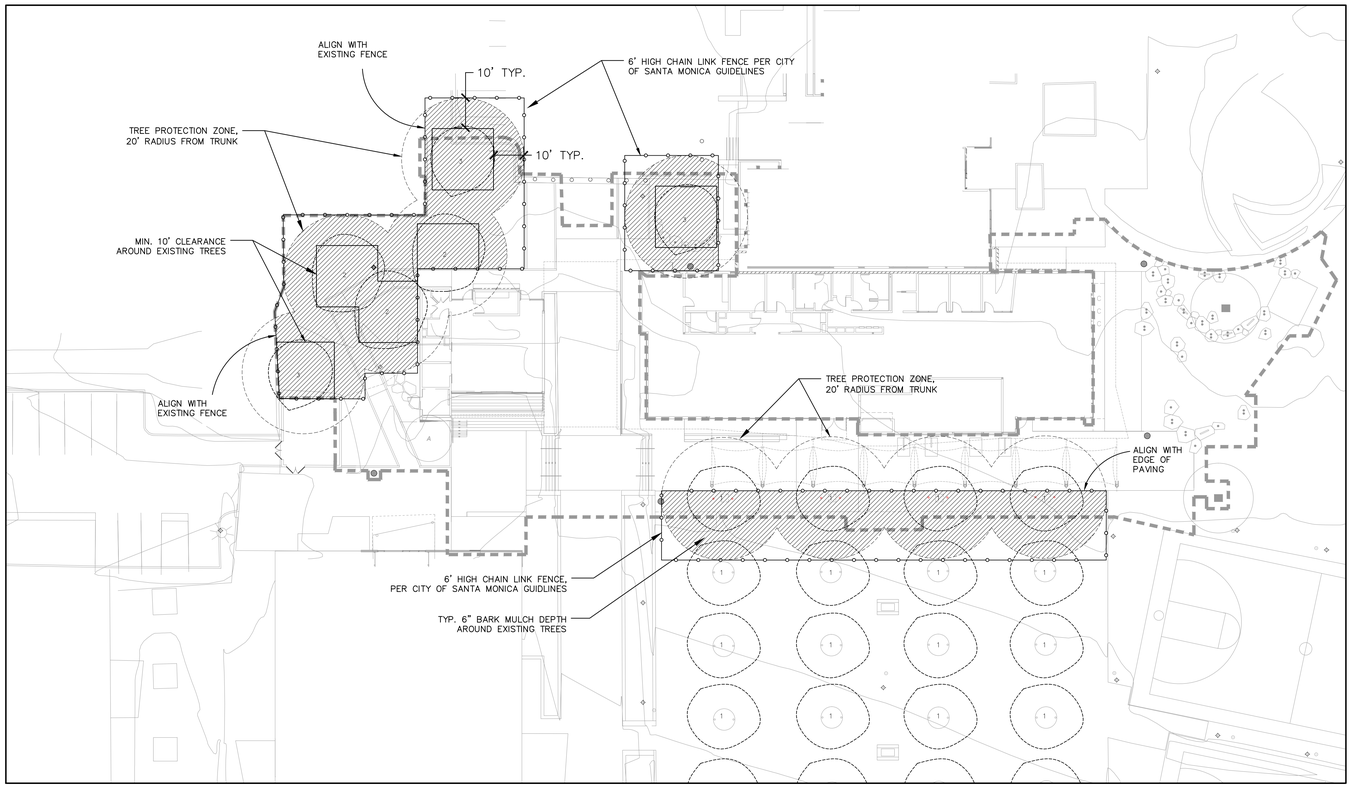

TREE PROTECTION LEGEND

SYMBOL	DESCRIPTION
1	EXISTING CINNAMOMUM CAMPHORA, TO BE PROTECTED
2	EXISTING PINUS CANARIENSIS, TO BE PROTECTED
3	EXISTING PODOCARPUS GRACILIOR, TO BE PROTECTED
10'-0" TYP	MINIMUM 10' CLEARANCE FROM EXISTING TRUNK, TREE PROTECTION ZONE, 10' CLEARANCE FROM EXISTING TREE DRIPLINE. 6" BARK MULCH DEPTH DURING CONSTRUCTION PHASE.
	6' HIGH CHAIN LINK FENCE PER CITY OF SANTA MONICA TREE PROTECTION ZONE GUIDELINES

NOTES:

1 – COORDINATE ALL OFF-SITE IMPROVEMENTS WITHIN THE TPZ WITH THE COMMUNITY FORESTER'S OFFICE

2 – NO CONSTRUCTION MATERIAL OR ACTIVITIES ALLOWED IN THE TPZ AREA

3 – PRUNING OF CITY TREES TO PROVIDE CLEARANCE FOR CONSTRUCTION ACTIVITIES SHALL ONLY BE DONE BY CITY OF SANTA MONICA COMMUNITY FOREST OPERATIONS

4 – THE CONTRACTOR IS RESPONSIBLE FOR ADDITIONAL TREE PROTECTION AS REQUIRED BY THE CONSTRUCTION STAGING LOCATION.

5 – SEE CIVIL DRAWING AND LANDSCAPE SPECIFICATIONS FOR TREE PROTECTION FOR ON-SITE PLANT MATERIAL TO BE PROTECTED.

6 – LIMIT OF WORK SHOWN DEFINES ALL ONSITE WORK, AND DOES NOT CONTAIN THE LIMIT OF WORK FOR THE OFFISTE TREE PROTECTION.

STANDARD TREE PROTECTION GUIDELINES – RIGHT-OF-WAY AND DISTRICT-OWNED TREES

TREES WITHIN THE PUBLIC RIGHT-OF-WAY MAY NOT BE REMOVED FOR ANY REASON AND ARE TO BE PROTECTED FROM INJURY OR DAMAGE DURING CONSTRUCTION. TREES WITHIN SCHOOL PROPERTY MAY NOT BE REMOVED UNLESS CLEARLY STATED AS SUCH ON THE DEMOLITION PLAN. PRUNING TO PROVIDE CLEARANCE FOR CONSTRUCTION ACTIVITIES FOR RIGHT-OF-WAY TREES OR DISTRICT-OWNED TREES SHALL ONLY BE UNDERTAKEN BY COMMUNITY FOREST OPERATIONS STAFF (RIGHT-OF-WAY TREES) OR THE DISTRICT (DISTRICT-OWNED TREES). QUESTIONS REGARDING RIGHT-OF-WAY TREES MAY BE DIRECTED TO THE CITY OF SANTA MONICA'S COMMUNITY FORESTER AT (310) 458-8974 AND DISTRICT-OWNED TREES TO SMMUSD'S CONSULTING ARBORIST AT (626) 355-0271.

THE TYPICAL TREE PROTECTION ZONE (TPZ) SHOULD ENCOMPASS THE CANOPY PLUS AND ADDITIONAL RADIAL WIDTH OF TEN FEET (10'). HOWEVER, SINCE CONDITIONS ARE UNIQUE, THE APPLICATION SHOULD BE EVALUATED WITH THE FINAL LIMITS OF THE TPZ BEING ESTABLISHED BY THE DISTRICT'S CONSULTING ARBORIST.

UNLESS OTHERWISE STATED, MULCH THE ENTIRE AREA OF THE TPZ IN AN EFFORT TO IMPROVE THE GROWING ENVIRONMENT FOR THE ROOTS. DURING THE CONSTRUCTION PHASE MAINTAIN A FOUR TO SIX-INCH LAYER OF CHIP MULCH OVER THE SOIL SURFACE TO REDUCE SOIL COMPACTION, IMPROVE AERATION, ENHANCE MOISTURE RETENTION, AND REDUCE TEMPERATURE EXTREMES. MULCH GENERALLY CONSISTS OF SHREDDED LEAVES OR BARK, PINE STRAW, PEAT MOSS, UNTREATED AND UNPAINTED WOOD CHIPS, OR COMPOSTED GREENWASTE. MULCH SHALL BE REMOVED BY THE CONTRACTOR AFTER PROJECT COMPLETION.

FENCE THE TPZ WITH A SIX FOOT (6') HIGH CHAIN LINK FENCE TO PREVENT WOUNDS TO THE TREE AND SOIL COMPACTION WITHIN THE ROOT ZONE. POST THE FENCE WITH A MINIMUM 8.5"X 11"LAMINATED SIGN STATING: "TREE PROTECTION ZONE – THIS FENCE SHALL NOT BE REMOVED".

THERE IS NO NEED TO SEVER MAJOR ROOTS DURING UTILITY TRENCHING. UTILITY ACCESS CAN BE ACCOMPLISHED BY CAREFUL INCREMENTAL MACHINE EXCAVATION SUPPLEMENTED BY HAND DIGGING WHEN NECESSARY TO PRESERVE SIGNIFICANT ROOTS. IF NECESSARY, STRONG WATER PRESSURE CAN BE USED TO "TUNNEL"BENEATH ROOTS. SEVERAL UTILITIES CAN SOMETIMES USE THE SAME PATHWAYS TO ELIMINATE NEEDLESS SOIL DISRUPTION. EXACT PLACEMENT OF UTILITIES MUST BE MARKED AND COORDINATED WITH INDIVIDUAL CONTRACTORS SO THAT THEY DO NOT JUST CHOOSE THE SHORTEST AND EASIEST ROUTES.

SHOULD IT BE NECESSARY TO TRENCH WITHIN THE TPZ, ALL TRENCHES SHALL BE HAND-DUG. NO ROOTS LARGER THAN TWO INCHES (2") IN DIAMETER SHALL BE CUT UNLESS NO OTHER ALTERNATIVE IS FEASIBLE. IF ROOTS EXCEEDING TWO INCHES IN DIAMETER ARE REQUIRED TO BE CUT, THE CONTRACTOR SHALL CALL THE DISTRICT'S CONSULTING ARBORIST BEFORE PROCEEDING.

ROOTS SMALLER THAN TWO INCHES IN DIAMETER THAT REQUIRE PRUNING SHALL BE CUT WITH PRUNING SAWS. CUTS SHALL BE MADE FLUSH WITH THE SIDE OF THE TRENCH, AND MADE AT 90-DEGREE ANGLES TO EXPOSE THE LEAST AMOUNT OF SURFACE AREA AS POSSIBLE. IF AT ANY TIME TWENTY-FIVE PERCENT (25%) OF THE AREA WITHIN THE TPZ IS BEING SEPARATED FROM THE TREE BY A TRENCH, THEN THE LINE SHALL BE EITHER RELOCATED OR INSTALLED BY BORING.

REMOVAL OF HARDSCAPE AND/OR EXCAVATION WITHIN THE TPZ SHALL BE COORDINATED WITH THE DISTRICT'S CONSULTING ARBORIST. EQUIPMENT MAY BE USED TO BREAK UP HARDSCAPE, BUT ONCE IT IS REMOVED ONLY FOOT TRAFFIC IS PERMITTED UNDER THE TPZ. THIS PROCESS IS TYPICALLY ACCOMPLISHED BY PLACING THE EQUIPMENT ON THE HARDSCAPE AND BACKING UP AS THE HARDSCAPE IS REMOVED.

THE MINIMUM DISTANCE BETWEEN AN OPEN TRENCH AND ANY TREE SHALL BE BETWEEN SIX INCHES (6") TO ONE FOOT (1') FOR EVERY INCH OF TRUNK DIAMETER, MEASURED AT FOUR AND ONE-HALF FEET (4.5') ABOVE EXISTING GRADE, DEPENDING ON THE SPECIES OF TREE. THE MINIMUM CLEARANCE SHALL BE TEN FEET (10') FROM THE TRUNK OF THE TREE.

IN THE EVENT ROOT PRUNING IS REQUIRED TO ACCOMMODATE GRADE CHANGES OR THE INSTALLATION OF HARDSCAPE FEATURES, THE ROOT PRUNING PROCEDURES SHALL BE DIRECTED BY COMMUNITY FOREST ER (RIGHT-OF-WAY TREES) OR THE DISTRICT'S CONSULTING ARBORIST (DISTRICT-OWNED TREES).

AT NO TIME SHALL ANY EQUIPMENT, MATERIALS, SUPPLIES, OR FILL SOIL BE ALLOWED IN THE TPZ UNLESS NECESSARY AND APPROVED BY EITHER CITY OF SANTA MONICA'S COMMUNITY FORESTER OR DISTRICT'S CONSULTING ARBORIST.

PRUNE AND FERTILIZE THE TREES AFTER THE COMPLETION OF ALL EXTERIOR WORK ON THE BUILDING AND AT THE BEGINNING OF THE LANDSCAPE PHASE AS DIRECTED BY THE COMMUNITY FORESTER OR DISTRICT'S CONSULTING ARBORIST.

PRIOR TO THE COMMENCEMENT OF THE PROJECT, PLEASE CONTACT THE DISTRICT'S CONSULTING ARBORIST AT (626) 355-0271 TO DETERMINE THE PRECISE LOCATION OF THE TPZ.

PICO BRANCH LIBRARY

Virginia Avenue Park
Santa Monica, CA 90404

PROJECT

KoningEizenberg Architecture
1454 25th St, Santa Monica, CA 90404
310.828.6131 info@kearch.com
310.828.0719 fax www.kearch.com

ARCHITECT'S PROJECT NO.
1001

ARCHITECT

All designs, ideas, arrangements and plans indicated by these drawings are the property and copyright of the Architect and shall neither be used on any other work nor be disclosed to any other person for any use whatsoever without written permission.

Koning Eizenberg Architecture and/or its principals and employees waives any and all liability or responsibility for problems that may occur when these plans, drawings, specifications, and/or designs are followed without the professional's guidance with ambiguities, or conflicts which are alleged.

SPURLOCK POIRIER
Landscape Architects
2102 Hancock Street
San Diego, CA 92110
619.681.0090
619.681.0096 fax

LICENSED LANDSCAPE ARCHITECT
ANDREW SPURLOCK – 1903
Signature
07/31/12
Renewal Date
Date
STATE OF CALIFORNIA

CONSULTANT

City of Santa Monica
Architecture Services
1437 4TH STREET, SUITE 300
SANTA MONICA, CA 90401
TEL. (310) 458-2205
FAX. (310) 399-1541
architecture@smgov.net

DATE : _____ 20 __
SUBMITTED BY :

DATE : _____ 20 __
APPROVED BY :
Miriam Mulder,
Architecture Services Manager

CITY OF SANTA MONICA
DEPARTMENT OF PUBLIC WORKS

REVIEWED BY : DATE : _____ 20 __

REVIEWED BY : DATE : _____ 20 __

REVIEWED BY : DATE : _____ 20 __

CITY CLIENT

NO.	DATE	BY	DESCRIPTION

REVISIONS

ISSUE
65% CONSTRUCTION DOCUMENTS / BID SET

DATE
01/23/2012

DRAWING NO. **6693**

SHEET OF SHEETS

SHEET TITLE
Tree Protection Plan

SHEET NO.
L3.00

SHEET OF
DWG. NO. :
TITLE OF PROJECT :

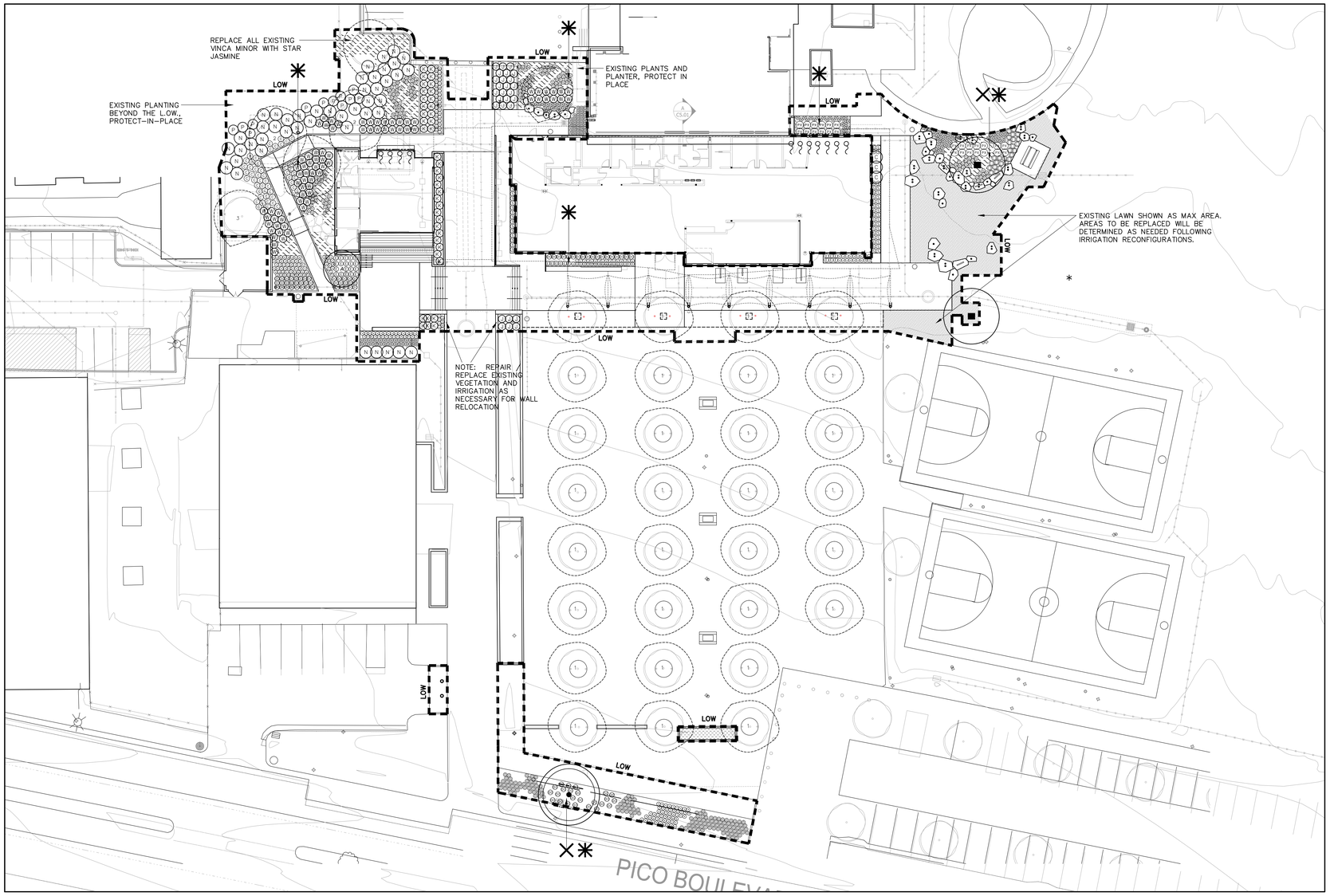

PLANT LEGEND

SYMBOL	TREES	COMMON NAME
1	EXISTING CINNAMOMUM CAMPHORA	CAMPHOR TREE
2	EXISTING PINUS CANARIENSIS	CANARY ISLAND PINE
3	EXISTING PODOCARPUS GRACILIOR	FERN PINE
	CINNAMOMUM CAMPHORA	CAMPHOR TREE
	METROSIDEROS EXCELSUS	NEW ZEALAND CHRISTMAS TREE

SYMBOL	SHRUBS	COMMON NAME
P	ACALYPHA WILKESIANA	COPPER PLANT
A	ALOE THRAKSII	COASTAL TREE ALOE
C	DRACAENA MARGINATA	RED EDGED DRACAENA
N	PHILODENDRON SELLOUM	SPLIT-LEAF PHILODENDRON
Fx	PHILODENDRON X 'XANADU'	XANADU DWARF PHILODENDRON

SYMBOL	PERENNIAL, GRASSES, AND GROUNCOVERS	COMMON NAME
Ae	AEONIUM 'ALICE KECK PARK'	NCN
	ANIGOZANTHOS FLAVIDUS 'YELLOW GEM'	YELLOW KANGAROO PAW
	CANNA X GENERALIS 'BLACK KNIGHT'	CANNA LILY
	CLIVIA MINIATA 'MONYA'	CLIVIA
	DESCHAMPSIA CESPITOSA	TUFTED HAIR GRASS
	LIRIOPE GIGANTEA	GIANT LILYTURF
	NEPHROLEPIS EXALTATA	SWORD FERN
	PHORMIUM COOKIANUM 'EMERALD GEM'	DWARF GREEN NEW ZEALAND FLAX
	PHORMIUM COOKIANUM 'JESTER'	FIESTA NEW ZEALAND FLAX
Pt	PHORMIUM TENAX 'BRONZE BABY'	BRONZE BABY FLAX
	MISCANTHUS TRANSMORRISONENSIS	EVERGREEN SILVER GRASS
	SANSEVIERIA TRIFASCIATA 'LAURENTII'	VARIEGATED SNAKE PLANT
	TRACHELOSPERMUM JASMINOIDES	STAR JASMINE
	WOODWARDIA FIMBRIATA	GIANT CHAIN FERN

SYMBOL	OTHER	
	LONICERA JAPONICA 'HALLIANA'	HALL'S HONEYSUCKLE
	CYNODON DACTYLON 'TIFWAY 2'	REPLACE AS NECESSARY FOLLOWING IRRIGATION RECONFIGURATION
	FARMER'S MARKET GARDEN	TO BE PLANTED AND MAINTAINED BY THE FARMER'S MARKET
	LIMIT OF WORK	
	ROOT BARRIER	
	PERCOLATION TEST	
	SOIL TEST	

NOTE: PLANTING ON TOP OF EXISTING ROOT BALL SHALL BE DONE BY HAND AND WITHOUT DAMAGING THE TREE ROOTS

GRAVEL MULCH AREA 1

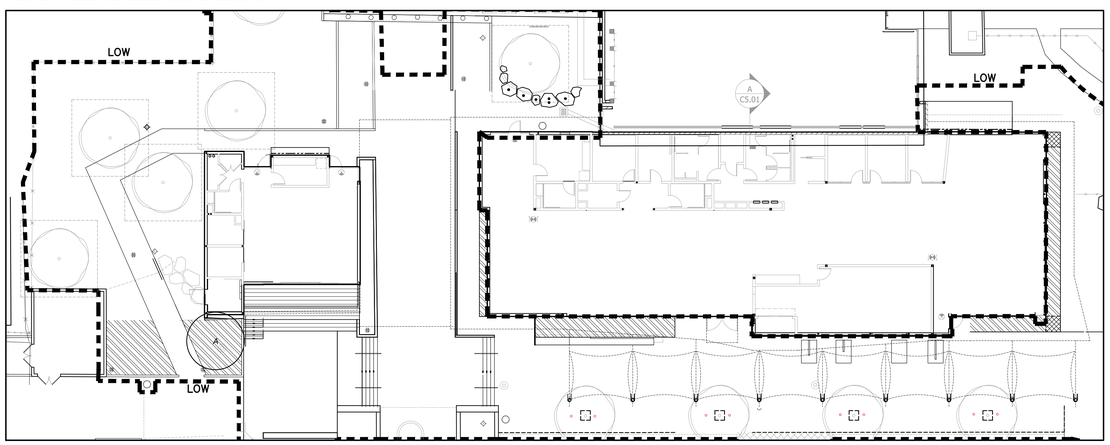

GRAVEL MULCH AREA 2

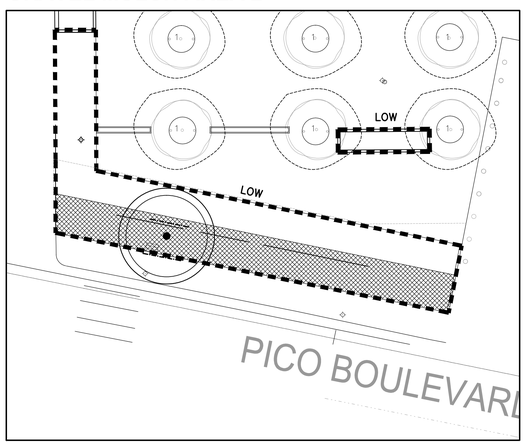

MULCH LEGEND

SYMBOL	DESCRIPTION		
NOTE:	3" LAYER BARK MULCH AT ALL PLANTING AREAS UNLESS NOTED OTHERWISE	GORILLA HAIR REDWOOD BARK MULCH	
	2" LAYER OF 1" CRUSHED AGGREGATE	SOUTHWEST BOULDER (800) 523-9992	SOUTHWEST BROWN
	3" LAYER OF 2-4" CRUSHED AGGREGATE	SOUTHWEST BOULDER (800) 523-9992	SOUTHWEST BROWN

PICO BRANCH LIBRARY

Virginia Avenue Park
Santa Monica, CA 90404

PROJECT

KoningEizenberg Architecture
1454 25th St, Santa Monica, CA 90404
310.828.6131 info@kearch.com
310.828.0719 fax www.kearch.com

ARCHITECT'S PROJECT NO.
1001

ARCHITECT

All designs, ideas, arrangements and plans indicated by these drawings are the property and copyright of the Architect and shall neither be used on any other work nor be disclosed to any other person for any use whatsoever without written permission.

Koning Eizenberg Architecture and/or its principals and employees waives any and all liability or responsibility for problems that may occur when these plans, drawings, specifications, and/or designs are followed without the professional's guidance with ambiguities, or conflicts which are alleged.

SPURLOCK POIRIER
Landscape Architects
2102 Hancock Street
San Diego, CA 92110
619.681.0090
619.681.0096 fax

LICENSED LANDSCAPE ARCHITECT
ANDREW SPURLOCK 1983
Signature
07/31/12
Renewal Date
Date
STATE OF CALIFORNIA

CONSULTANT

City of Santa Monica
Architecture Services
1437 4TH STREET, SUITE 300
SANTA MONICA, CA 90401
TEL. (310) 458-2205
FAX. (310) 399-1541
architecture@smgov.net

SUBMITTED BY : DATE : 20

APPROVED BY : Miriam Mulder, Architecture Services Manager DATE : 20

CITY OF SANTA MONICA
DEPARTMENT OF PUBLIC WORKS

REVIEWED BY : DATE : 20

REVIEWED BY : DATE : 20

REVIEWED BY : DATE : 20

CITY CLIENT

NO.	DATE	BY	DESCRIPTION

REVISIONS

ISSUE
65% CONSTRUCTION DOCUMENTS / BID SET

DATE
01/23/2012

DRAWING NO. **6693**

SHEET OF SHEETS

SHEET TITLE
Planting Plan

SHEET NO.
L3.01

NOTES

GENERAL REQUIREMENTS

1. IF THE MOISTURE CONTENT OF THE SOIL SHOULD REACH SUCH A LEVEL THAT WORKING IT WOULD DESTROY SOIL STRUCTURE, SPREADING AND GRADING OPERATIONS SHALL BE SUSPENDED UNTIL, IN THE OPINION OF THE OWNER'S REPRESENTATIVE, THE MOISTURE CONTENT IS INCREASED OR REDUCED TO ACCEPTABLE LEVELS AND THE DESIRED RESULTS ARE LIKELY TO BE OBTAINED.

2. ACTUAL PLANTING SHALL BE PERFORMED DURING THOSE PERIODS WHEN WEATHER AND SOIL CONDITIONS ARE SUITABLE IN ACCORDANCE WITH LOCALLY ACCEPTED HORTICULTURAL PRACTICE AS APPROVED BY THE OWNER'S REPRESENTATIVE. CONTRACTOR SHALL ONLY INSTALL AS MANY PLANTS PER DAY AS CAN BE PLANTED AND WATERED ON THAT SAME DAY.

3. ALL SCALED DIMENSIONS ARE APPROXIMATE. BEFORE PROCEEDING WITH ANY WORK, THE CONTRACTOR SHALL CAREFULLY CHECK AND VERIFY ALL DIMENSIONS AND SHALL IMMEDIATELY INFORM THE OWNER'S REPRESENTATIVE OF ANY DISCREPANCY BETWEEN THE DRAWINGS AND/OR SPECIFICATIONS AND ACTUAL CONDITIONS.

4. ANY PLANT MATERIAL QUANTITIES THAT MAY BE SHOWN ARE FOR CONVENIENCE ONLY. CONTRACTOR SHALL VERIFY COUNT AND PROVIDE NUMBER TO FULFILL WHAT IS SHOWN ON THE PLANTING PLANS - PRIOR TO ORDERING FROM NURSERIES.

5. PROTECTION OF EXISTING TREES, SHRUBS, AND GROUNDCOVER:

a. ALL PLANTING TO REMAIN SHALL BE PROTECTED AT ALL TIMES FROM DAMAGE BY WORKERS AND EQUIPMENT. WHERE IT IS NECESSARY TO EXCAVATE ADJACENT TO EXISTING TREES, THE CONTRACTOR SHALL USE ALL POSSIBLE CARE TO AVOID INJURY TO TREES AND ROOTS AND SHALL FOLLOW PROJECT SPECIFICATIONS - ONLY ALLOWED AFTER RECEIPT OF WRITTEN APPROVAL OF THE OWNER'S REPRESENTATIVE.
b. DAMAGE TO A TREE OR SHRUB, WHICH RESULTS IN DEATH OR PERMANENT DISFIGURATION, SHALL RESULT IN THE CONTRACTOR'S COMPLETE REMOVAL OF SAID TREE OR SHRUB, INCLUDING ROOTS, FROM THE SITE. THE CONTRACTOR SHALL REPLACE THE TREE OR SHRUB AS ESTABLISHED BY THE PROJECT SPECIFICATIONS.
c. ALL PLANTS TO REMAIN ON-SITE WILL BE IRRIGATED BY THE CONTRACTOR DURING THE ENTIRE CONSTRUCTION CONTRACT.

6. AT THE COMPLETION OF ALL PLANTING OPERATIONS, THE PREMISES ARE TO BE LEFT NEAT AND CLEAN. ALL SURPLUS MATERIALS, NURSERY TAGS AND WASTE ARE TO BE REMOVED FROM THE SITE.

DEEP WATER LEACHING

1. FILL IN ALL DEPRESSIONS, VOIDS, EROSION SCARS, OR SETTLED TRENCHES GENERATED BY THE DEEP LEACHING WITH CONDITIONED SOIL, LEAVING A FINAL FINISH GRADE SMOOTH AND EVEN.

FINAL GRADES

1. MINOR MODIFICATIONS TO GRADE MAY BE REQUIRED TO ESTABLISH THE FINAL GRADES.

2. SEE PROJECT SPECIFICATIONS FOR SOIL PREPARATION DEPTHS AND METHODS.

3. THE CONTRACTOR SHALL TAKE EVERY PRECAUTION TO PROTECT AND AVOID DAMAGE TO SPRINKLER HEADS, IRRIGATION LINES, AND OTHER UNDERGROUND UTILITIES DURING GRADING AND CONDITIONING OPERATIONS.

4. CONTRACTOR SHALL COORDINATE ALL DRAINAGE WORK WITH ALL OTHER TRADES. ESTABLISHED SITE DRAINAGE SHALL BE MAINTAINED BY CONTRACTOR DURING ALL PHASES OF LANDSCAPE CONSTRUCTION.

5. FINAL FINISH GRADES SHALL INSURE POSITIVE DRAINAGE OF THE SITE WITH ALL SURFACE DRAINAGE AWAY FROM BUILDINGS, WALLS AND TOWARD DRAINS AND CATCH BASINS.

6. FINAL GRADES SHALL BE APPROVED IN WRITING BY THE OWNER'S REPRESENTATIVE BEFORE PLANTING OPERATIONS WILL BE ALLOWED TO BEGIN.

7. ROUGH GRADING OTHER THAN THAT NOTED ON THE LANDSCAPE DRAWINGS IS BY THE GENERAL CONTRACTOR. FINISH GRADING IS THE RESPONSIBILITY OF THE LANDSCAPE CONTRACTOR.

8. FINISH GRADING WILL CONSIST OF RAKING ALL AREAS TO A SMOOTH GRADE ROTO-TILLING THE SOIL TO A DEPTH OF 6" AND REMOVING ALL ROCKS OR CLODS OF 2" DIAMETER OR LARGER (TURF AREA). REMOVAL OF MINOR AMOUNTS OF CONSTRUCTION WASTE IS INCLUDED.

9. FINISH GRADE IS TO BE 2" BELOW TOP OF ADJACENT FLASHING AND PAVING.

PERCOLATION TESTING AND DRAINAGE

1. A MINIMUM OF FIVE (5) SOILS PERCOLATION TESTS SHALL BE PERFORMED BY FILLING 24" OR 36" BOX TREE PLANTING PITS (SEE PLANS FOR APPROPRIATE SIZE OF TREE PIT) WITH WATER, WAITING 12 HOURS AND THEN COMPLETELY REFILLING. IF ALL THE WATER IS NOT ABSORBED WITHIN 12 HOURS OF THE SECOND FILLING IT HAS FAILED THE TEST. UPON FAILURE, CONTACT OWNER'S REPRESENTATIVE FOR REMEDIAL MEASURES.

2. BID PRICE SHALL BE BASED ON STANDARD TREE PLANTING PIT DETAILS SHOWN ON THE PLANS.

WEED CONTROL

1. THE LANDSCAPE CONTRACTOR IS TO REMOVE ALL WEEDS AND OR UNWANTED GRASSES (INCLUDING THE ROOTS) EXISTING IN THE LANDSCAPE AREAS. ALL LANDSCAPE AREAS AREA TO RECEIVE THE PRE-EMERGENT HERBICIDE SURFLAN PER MANUFACTURER'S INSTRUCTIONS. APPLICATION OF THE HERBICIDE SHALL BE DONE BY PERSONNEL LICENSED TO HANDLE AGRICULTURAL CHEMICALS.

2. PRIOR TO PLANTING, ERADICATE WEEDS WITHIN THE LIMITS OF WORK USING PRODUCTS APPROVED BY OPEN SPACE DIVISION THAT HAVE A "CAUTION" RATING AND NOT HIGHER.

3. TAKE CARE TO PROTECT EXISTING PLANT MATERIAL WHICH IS TO REMAIN AS SHOWN ON THE PLANS.

SOIL CONDITIONING AND FERTILIZING

1. PLANTER SOIL FOR RAISED PLANTER (S) SHALL BE IMPORTED TOP SOIL PER SPECIFICATIONS. ADD PRE-PLANT FERTILIZER TO PLANTER SOIL MIX AND AT THE RATE OF 40 LBS. PER CUBIC YARD. RAISED PLANTING AREAS ARE DEFINED AS PLANTED AREAS THAT ARE BOUNDED BY CURBS OR WALLS 12" HIGHER THAN ADJACENT FINISH GRADE.

2. ALL LANDSCAPE AREAS ARE TO RECEIVE AN EVEN APPLICATION OF 4 CUBIC YARDS OF NITROHUMUS, 30 POUNDS OF 6.20.20 FERTILIZER, 50 POUNDS OF TRI-C HUMATE PLUS AND 10 POUNDS OF SOIL SULFUR FOR EACH 1000 SQUARE FEET. THE ABOVE AMENDMENTS ARE TO BE INCORPORATED UNIFORMLY INTO THE TOP 6" OF SOIL. AGRIFORM 21 GRAM PLANT TABLET INSTALLED IN ALL PLANTING PITS. REFER TO DETAILS FOR AMOUNTS.

GENERAL PLANTING

1. PRUNING SHALL NOT BE DONE EXCEPT BY APPROVAL OF OWNER'S REPRESENTATIVE.

2. PLANT LOCATIONS SHALL BE CHECKED FOR POSSIBLE INTERFERENCE WITH EXISTING UNDERGROUND PIPING, PRIOR TO EXCAVATION OF HOLES. IF UNDERGROUND CONSTRUCTION OR UTILITY LINES ARE ENCOUNTERED IN THE EXCAVATION OF PLANTING AREAS, NOTIFY THE OWNER. EXPENSES FOR REPAIR OF DAMAGE TO EXISTING UTILITIES SHALL BE THE RESPONSIBILITY OF THE CONTRACTOR. MINIMUM TREE SEPARATION DISTANCES ARE AS FOLLOWS:

a. TRAFFIC SIGNALS (STOP SIGNS) - 20 FEET
b. UNDERGROUND UTILITY LINES - 5 FEET
c. ABOVE GROUND UTILITY STRUCTURES - 10 FEET
d. DRIVEWAY (ENTRIES) - 10 FEET
e. INTERSECTIONS (INTERSECTING CURB LINES OF TWO STREETS) - 25 FEET

3. ALL EXCAVATED HOLES SHALL HAVE VERTICAL SIDES WITH ROUGHENED SURFACES AND SHALL BE OF THE MINIMUM SIZES INDICATED ON DRAWINGS AND IN THE PROJECT SPECIFICATIONS. HOLES SHALL BE, IN ALL CASES, LARGE ENOUGH TO PERMIT HANDLING AND PLANTING WITHOUT INJURY OR BREAKAGE OF ROOT BALLS OR ROOTS.

4. PRIOR TO PLANTING & BACKFILLING ALL PLANTERS ON DECK, CONTRACTOR TO PERFORM A 24-HOUR TEST OF WATERPROOFING MATERIAL BY SEALING ALL DRAINS & FILLING PLANTERS WITH WATER FOR A MINIMUM OF 24 HOURS. DRAINS TO BE UNSEALED AT END OF TEST TO ALLOW FOR WATER FLOW VERIFICATION. LEAKING TO BE BROUGHT TO THE ATTENTION OF THE ARCHITECT IMMEDIATELY.

PLANT AVAILABILITY

1. THE ACT OF PROVIDING A BID FOR THIS PROJECT ESTABLISHES THE CONTRACTOR'S UNDERSTANDING THAT THE PLANTS SPECIFIED HEREIN MAY BE UNUSUAL AND MORE DIFFICULT TO LOCATE THAN THE INDUSTRY STANDARD AND THAT THE CONTRACTOR AGREES TO THE FOLLOWING:

a. THE CONTRACTOR SHALL SEARCH FOR EACH PLANT SPECIFIED. LISTED BELOW ARE PLANT NURSERY SOURCES TO BE CONTACTED DURING CONTRACTOR'S SEARCH. IF ANY OF THE LISTED NURSERIES OR ANY NURSERIES IN CALIFORNIA OR ARIZONA HAVE THE SPECIFIED PLANTS IN THE CONTAINER SIZES SPECIFIED, THE CONTRACTOR SHALL BE OBLIGATED TO PURCHASE AND OBTAIN DELIVERY OF SAID PLANTS.

b. WITHIN TWENTY-ONE (21) DAYS AFTER AWARD OF CONTRACT, CONTRACTOR SHALL SUBMIT A PLANT LIST WITH NURSERY SOURCES, PLANT QUANTITIES AND PLANT SIZES; PLANT LIST SHALL INDICATE ALL UNAVAILABLE PLANTS AND WHICH NURSERIES WERE CONTACTED DURING CONTRACTOR'S SEARCH. (LANDSCAPE ARCHITECT SHALL SUGGEST PLANT SUBSTITUTION BASED UPON INFORMATION IN CONTRACTOR SUBMITTAL.)

c. UPON ACCEPTANCE OF CONTRACTOR PLANT SUBMITTAL BY LANDSCAPE ARCHITECT, CONTRACTOR SHALL SECURE PLANTS WITHIN FIVE (5) DAYS AND ARRANGE FOR DELIVERY FROM NURSERIES.

TREES, SHRUBS, AND VINES

1. EACH TREE AND SHRUB SHALL BE PLACED IN THE CENTER OF THE HOLE AND SHALL BE SET PLUMB AND HELD RIGIDLY IN POSITION UNTIL THE PLANTING BACKFILL HAS BEEN TAMPED DOWN AROUND EACH ROOTBALL.

2. ALL PLANTS SHALL BE SET AT SUCH A LEVEL THAT AFTER SETTLING THEY BEAR THE SAME RELATIONSHIP TO THE SURROUNDING FINISH GRADE AS THEY BORE TO THE SOIL LINE GRADE IN THE CONTAINER AND ROOTS ARE FULLY COVERED WITH SOIL AND FIRMED, UNLESS OTHERWISE NOTED.

3. ALL PLANTS ARE TO HAVE A PLANTING PIT TWO TIMES THE DIAMETER OF THE ROOTBALL AND 6" BELOW IT'S DEPTH. THE PLANT PIT IS TO BE BACKFILLED (AFTER POSITIONING OF PLANT) WITH THE FOLLOWING PER YARD BLEND: PLANTERS @ GRADE: 50% - SITE SOIL; 50% - KELLOGG 'SOIL AMEND'.

4. ALL PLANTS SHALL BE THOROUGHLY WATERED INTO THE FULL DEPTH OF EACH PLANTING HOLE IMMEDIATELY AFTER PLANTING.

5. TREES LARGER THAN 24" BOX SHALL BE SPOTTED AND PLANTED WITH A CRANE. ALL 24" AND 36" BOX TREES SHALL BE STAKED PER DETAILS EXCEPT PALMS.

6. ROOT BARRIERS: "ROOT BOOSTER" ROOT CONTROL BARRIERS SHALL BE INSTALLED WHERE TURF MEETS SHRUB/GROUNDCOVER PLANTINGS; ROOT BARRIER SHALL BE LOCATED ON LAWN SIDE OF HEADER/MOW CURB. DEPTH AND MODEL/PRODUCT NUMBER PER SPECIFICATIONS.

7. MULCH ALL SHRUB AND GROUND COVER AREAS WITH A 2" LAYER WOOD BARK MULCH. KEEP MULCH 6" AWAY FROM PLANT TRUNK.

PLANTING SOD TURF

1. SEE SPECIFICATIONS FOR LAWN AREA SOIL PREPARATION AND SOD INSTALLATION. LAWN SOIL PREPARATION SHALL BE AS DESCRIBED IN SPECIFICATIONS, EXCEPT DEPTH SHALL BE 12"; AMENDMENTS SHALL BE ROTOTILLED INTO THE TOP 6". IN AREAS OF EXISTING TREE ROOTS LARGER THAT 2", TAKE CARE TO NOT SEVER ROOTS - USING HAND TOOLS WHERE REQUIRED. GAIN APPROVAL IN WRITING FROM OWNER REPRESENTATIVE FOR ACCESS AND WORK WITHIN TREE PROTECTION AREAS.

2. SOD IS TO BE FRSEHLY CUT OVERSEEDED 'MEDALLION' FROM PACIFIC SOD AND PLACED IN SECTIONS NOT SMALLER THAN ONE SQUARE FOOT. STAGGER THE JOINTS BETWEEN ROLLS. SIFT SOIL (USE SOIL WASTE THAT HAS FALLEN OFF SOD) INTO ALL JOINTS TO FILL ANY VOIDS CREATED.

3. ROLL SOD WITH LIGHTLY WEIGHTED ROLLER AFTER COMPLETION OF ALL SODDING OPERATIONS.

MAINTENANCE PERIOD

1. LANDSCAPE AREAS SHALL BE KEPT FREE OF WEEDS, NOXIOUS GRASS, TRASH AND ALL OTHER UNDESIRED VEGETATIVE GROWTH AND DEBRIS.

2. PLANT MATERIALS SHALL BE KEPT IN A HEALTHY, OPTIMUM GROWING CONDITION AND IN A VISUALLY PLEASING APPEARANCE BY WATERING, PRUNING, MOWING, FERTILIZING, RESTAKING, PEST AND DISEASE CONTROLLING, SPRAYING, WEEDING, CLEAN-UP AND ANY MAINTENANCE OPERATION NECESSARY TO INSURE A HEALTHY, VIGOROUS STAND OF PLANTS AT THE TIME OF FINAL INSPECTION.

3. SEE SPECIFICATIONS FOR APPLICATION OF THE POST PLANTING FERTILIZER AT THE RATE SPECIFIED.

4. CONTRACTOR IS RESPONSIBLE FOR THE LANDSCAPE MAINTENANCE FOR ALL PLANTED AND/OR IRRIGATED AREAS SHOWN ON THE PLANS FOR THE INITIAL MAINTENANCE PERIOD (SEE PROJECT SPECIFICATIONS FOR MAINTENANCE PERIOD.)

5. MAINTENANCE IS TO INCLUDE CONTROL AND TREATMENT OF ALL PLANT DISEASE AND PLANT PESTS ENCOUNTERED DURING THIS PERIOD. APPLICATION OF CHEMICALS IS TO BE PERFORMED BY A LICENSED CHEMICAL APPLICATOR.

6.THE SPRINKLER SYSTEM IS TO BE CHECKED FOR COVERAGE AT EACH WATERING. MALFUNCTIONS, SUCH AS DIRTY HEADS, CLOGGED EMITTERS, ADJUSTMENT OF HEADS, ETC. ARE TO BE CORRECTED ON THE SPOT. MORE SERIOUS DEFECTS ARE TO BE REPORTED IMMEDIATELY TO THE OWNER FOR CORRECTION BY THE SPRINKLER CONTRACTOR OR CORRECTED IMMEDIATELY BY THE LANDSCAPE CONTRACTOR IF CONTRACT INCLUDED SPRINKLER INSTALLATION.

LANDSCAPE DECLARATIONS

1. LANDSCAPE PLANS, WHEN SUBMITTED, SHALL COMPLY WITH SMMC 9.04.08.02.070(I)

2. FOR OPEN-TRENCHED AND FINAL INSPECTIONS, CALL BUILDING AND SAFETY AT 310.458.8355

3. PARKWAY PERMITS MUST BE OBTAINED FROM AND APPROVED BY THE PUBLIC WORKS DEPARTMENT

4. PRIOR TO CONSTRUCTION OF LANDSCAPED AREA OR IRRIGATION, THE CONTRACTOR MUST OBTAIN AND REVIEW A COPY OF THE WATER-EFFICIENT LANDSCAPE AND IRRIGATION STANDARDS

5. ALL LANDSCAPING AND IRRIGATION SYSTEMS MUST COMPLY WITH ALL LOCAL, STATE AND FEDERAL LAWS AND REGULATIONS

GUARANTEE

1. ALL PLANT MATERIAL (OTHER THAN FLATTED MATERIAL) LESS THAN 24" BOX SIZE SHALL BE GUARANTEED FOR A PERIOD OF 3 MONTHS. ALL PALMS & 24" BOX MATERIAL AND LARGER MATERIAL SHALL BE GUARANTEED FOR A PERIOD OF ONE YEAR. GUARANTEE PERIOD COMMENCES FROM THE TIME OF FINAL INSPECTION AND ACCEPTANCE BY THE OWNER. PLANTS USED FOR REPLACEMENT SHALL BE THE SAME KIND AND SIZE AS ORIGINALLY PLANTED. THEY ARE TO BE PLANTED FOLLOWING THE ORIGINAL PLANS AND SPECIFICATIONS.

SOILS ANALYSIS

A SOILS ANALYSIS REPORT IS TO BE PROVIDED BY THE CONTRACTOR PRIOR TO LANDSCAPE INSTALLATION. APPLICABLE AMENDMENTS WILL BE DETERMINED FOLLOWING THE LANDSCAPE ARCHITECT'S FULL REVIEW OF THE SOIL ANALYSIS REPORT.

PLANT LEGEND

SYMBOL	TREES	COMMON NAME	CONTAINER SIZE	MATURE SIZE	QUANTITY
1	EXISTING CINNAMOMUM CAMPHORA	CAMPHOR TREE	–	–	30
2	EXISTING PINUS CANARIENSIS	CANARY ISLAND PINE	–	–	3
3	EXISTING PODOCARPUS GRACILIOR	FERN PINE	–	–	3
●	CINNAMOMUM CAMPHORA	CAMPHOR TREE	60" BOX	50'H X 60'W	1
■	METROSIDEROS EXCELSUS	NEW ZEALAND CHRISTMAS TREE	60" BOX	30'H X 30'W	2

SYMBOL	SHRUBS	COMMON NAME	CONTAINER SIZE	O.C. SPACING	MATURE SIZE	QUANTITY	PAVING OFFSET	WATER NEEDS	EXPOSURE
P	ACALYPHA WILKESIANA	COPPER PLANT	15 GAL.	4' O.C.	10'H X 6'W	12	2'	MEDIUM	LIGHT SHADE
A	ALOE THRAKSII	COASTAL TREE ALOE	48" BOX	AS SHOWN	STANDARD FORM 14–16'H X 6–8'W	1	3'	LOW	FULL SUN
C	DRACAENA MARGINATA	RED EDGED DRACAENA	24" BOX		6–8'H X 6–8'W	3	3'	LOW	SUN/PART SHADE
N	PHILODENDRON SELLOUM	SPLIT–LEAF PHILODENDRON	5 GAL	5' O.C.	6–10'H X 6–8'W	41	3'	MEDIUM	COOL SUN/PART SHADE
PX	PHILODENDRON X 'XANADU'	XANADU DWARF PHILODENDRON	5 GAL	3' O.C.	3' H X 3' W	26	2'	MEDIUM	COOL SUN/PART SHADE

SYMBOL	PERENNIAL, GRASSES, AND GROUNCOVERS	COMMON NAME	CONTAINER SIZE	O.C. SPACING	MATURE SIZE	QUANTITY	PAVING OFFSET	WATER NEEDS	EXPOSURE
AW	AEONIUM 'ALICE KECK PARK'	NCN	1 GAL.	2'–6" O.C.	1–2'H X 2–3'W	71	1' 6"	LOW	SUN/PART SHADE
AP	ANIGOZANTHOS FLAVIDUS 'YELLOW GEM'	YELLOW KANGAROO PAW	5 GAL.	18" O.C.	3'H X 3'W	120	1' 6"	LOW	SUN
CG	CANNA X GENERALIS 'BLACK KNIGHT'	CANNA LILY	1 GAL.	4' O.C.	4–6'H X 3–4'W	44	2'	MEDIUM	SUN
CM	CLIVIA MINIATA 'MONYA'	CLIVIA	1 GAL.	2'–4" O.C.	2–3'H X 2–3'W	61	1'	MEDIUM	LIGHT SHADE
DC	DESCHAMPSIA CESPITOSA	TUFTED HAIR GRASS	1 GAL.		1–2'H X 2'W	26	1'	MEDIUM	SUN/PART SHADE
LG	LIRIOPE GIGANTEA	GIANT LILYTURF	5 GAL.	18" O.C.	2–3'H X 2–3'W	163	1' 6"	MEDIUM	COOL SUN/PART SHADE
NE	NEPHROLEPIS EXALTATA	SWORD FERN	1 GAL.	18" O.C.	3–4'H X 2'W	166	1'	MEDIUM	COOL SUN/PART SHADE
PD	PHORMIUM COOKIANUM 'EMERALD GEM'	DWARF GREEN NEW ZEALAND FLAX	5 GAL.	2' O.C.	1–2'H X 2–3'W	31	2'	LOW	FULL SUN/PART SHADE
PF	PHORMIUM COOKIANUM 'JESTER'	FIESTA NEW ZEALAND FLAX	5 GAL.	1'–6" O.C.	1–2'H X 1–2'W	183	1' 6"	LOW	SUN/PART SHADE
PK	PHORMIUM TENAX 'BRONZE BABY'	BRONZE BABY FLAX	5 GAL.	3' O.C.	3'H X 3'W	40	1' 6"	LOW	SUN/PART SHADE
MS	MISCANTHUS TRANSMORRISONENSIS	EVERGREEN SILVER GRASS	5 GAL.	3' O.C.	2–3'H X 3–4'W	27	2'	MEDIUM	SUN OR SHADE
ST	SANSEVIERIA TRIFASCIATA 'LAURENTII'	VARIEGATED SNAKE PLANT	1 GAL.	2' O.C.	3–4'H X 2–3'W	50	1'	LOW	LIGHT SHADE
	TRACHELOSPERMUM JASMINOIDES	STAR JASMINE	1 GAL	2'–6" O.C.	1–2'H X 18–20'W	193	2'	MEDIUM	SUN/PART SHADE
W	WOODWARDIA FIMBRIATA	GIANT CHAIN FERN	5 GAL	3' O.C.	4–5'H X 3'W	88	2'	MEDIUM	LIGHT SHADE

SYMBOL	OTHER	COMMON NAME	CONTAINER SIZE	O.C. SPACING	MATURE SIZE	QUANTITY	PAVING OFFSET	WATER NEEDS	EXPOSURE
	LONICERA JAPONICA 'HALLIANA'	HALL'S HONEYSUCKLE	5 GAL	AS SHOWN	6–10'H	11		LOW	SUN OR SHADE
	CYNODON DACTYLON 'TIFWAY 2'	REPLACE AS NECESSARY FOLLOWING IRRIGATION RECONFIGURATION					1,414 SF		HIGH SUN
	FARMER'S MARKET GARDEN	TO BE PLANTED AND MAINTAINED BY THE FARMER'S MARKET				159 SF			

LIMIT OF WORK

ROOT BARRIER

PERCOLATION TEST

SOIL TEST

GENERAL PROJECT CALCULATIONS

	AREA IN SQ FT
PROJECT PARCEL SIZE	
TOTAL BUILDING FOOTPRINTS	
TOTAL EXISTING HARDSCAPE AREA	
TOTAL EXISTING LANDSCAPE AREA	
TOTAL PROPOSED HARDSCAPE AREA	10,436
TOTAL PROPOSED LANDSCAPE AREA	10,143

HYDROZONE MATRIX

1 ZONE	2 SQ FOOT	3 % OF TOTAL LS AREA	4 PLANT TYPE	5 PLANTING FORM	6 PRIMARY HYDROZONE BASIS	7 HYDROZONE DESCRIPTION	8 HYDROZONE EXPOSURE	9 IRRIGATION METHOD	10 IRRIGATION DEVICE MFG/MODEL/#	11 DEVICE FLOW RATE	12 CALCULATED PRECIP RATE	13 ZONE GPM	14 ZONE	15 CONTROLLER PRESSURE STATION
A	3,735	31	T	SE, SO	PL	TURF		GD						
B	8,179	69	M, L	1G, 5G, 15G, 24", 48"	PL	MIXED SHRUB		GD						

PLANT TYPE
WUCOLS
CODE RATING
T TURF
H HIGH
M MEDIUM
LVL LOW, VERY LOW
O OTHER

PLANTING FORM
SE SEED
SO SOD
F FLAT
P PLUG
1G 1 GALLON
5G 5 GALLON
15G 15 GALLON
24" 24" BOX
48" 48" BOX

HYDROZONE BASIS
PL PLANT TYPE

HZ EXPOSURE
1 SUN ALL DAY
2 SUN MOST OF THE DAY
3 SHADE MOST OF THE DAY
4 SHADE ALL DAY

IRRIGATION METHOD
RD RANDOM DRIP
GD GRID DRIP
LD LINEAR DRIP

PICO BRANCH LIBRARY

Virginia Avenue Park
Santa Monica, CA 90404

PROJECT

KoningEizenbergArchitecture
1454 25th St, Santa Monica, CA 90404
310.828.6131 info@kearch.com
310.828.0719 fax www.kearch.com

ARCHITECT'S PROJECT NO.
1001

ARCHITECT

All designs, ideas, arrangements and plans indicated by these drawings are the property and copyright of the Architect and shall neither be used on any other work nor be disclosed to any other person for any use whatsoever without written permission.

Koning Eizenberg Architecture and/or its principals and employees waives any and all liability or responsibility for problems that may occur when these plans, drawings, specifications, and/or designs are followed without the professional's guidance with ambiguities, or conflicts which are alleged.

SPURLOCK POIRIER
Landscape Architects
2102 Hancock Street
San Diego, CA 92110
619.681.0090
619.681.0096 fax

LICENSED LANDSCAPE ARCHITECT
ANDREW SPURLOCK – 1983
Signature
07/31/12
Renewal Date
Date
STATE OF CALIFORNIA

CONSULTANT

City of Santa Monica
Architecture Services

1437 4TH STREET, SUITE 300
SANTA MONICA, CA 90401
TEL. (310) 458-2205
FAX. (310) 399-1541
architecture@smgov.net

DATE : _____ 20 __
SUBMITTED BY :

DATE : _____ 20 __
APPROVED BY :
Miriam Mulder,
Architecture Services Manager

CITY OF SANTA MONICA
DEPARTMENT OF PUBLIC WORKS

REVIEWED BY : DATE : _____ 20 __

REVIEWED BY : DATE : _____ 20 __

REVIEWED BY : DATE : _____ 20 __

CITY CLIENT

NO.	DATE	BY	DESCRIPTION

REVISIONS

ISSUE
65% CONSTRUCTION DOCUMENTS / BID SET

DATE
01/23/2012

DRAWING NO. **6693**

SHEET OF SHEETS

SHEET TITLE
Planting Legend

SHEET NO.
L3.02

SHEET OF

DWG. NO. : -

TITLE OF PROJECT :

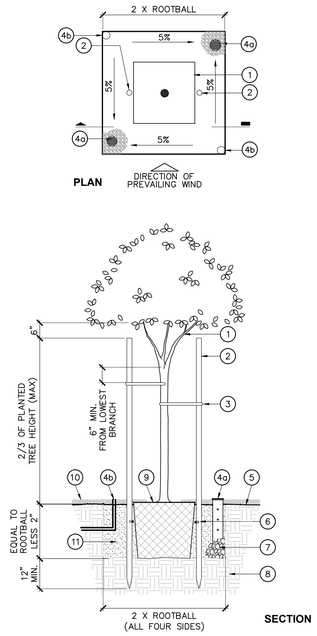

1. TREE AND ROOTBALL
2. TREE STAKES (2); LOCATE ON WINDWARD SIDE OF TREE
3. TREE TIES PER SPECIFICATIONS
4a. (2) 4" DIA. AERATION/BREATHER TUBES WITH GRATE CAPS PER SPECS. WRAP PIPE IN FILTER FABRIC SOCK, KNOTTED AT THE TOP. LEAVE AERATION TUBE HOLLOW.
4b. (2) IRRIGATION BUBBLERS; REFER TO IRRIGATION PLANS. AERATION TUBES AND BUBBLERS SHALL BE SYMMETRICAL
5. FINISH GRADE
6. PLANT TABLETS PER SPECIFICATIONS 6" BELOW GRADE.
7. 1 CU. FT. CRUSHED AGGREGATE
8. SUBGRADE
9. SET ROOTBALL @ 2" ABOVE FINISH GRADE
10. MULCH PER SPECIFICATIONS
11. PLANTING BACKFILL MIX PER SPECIFICATIONS

NOTES:

1. REFER TO PLANTING SPECIFICATION FOR ADDITIONAL INFORMATION
2. DETAIL SHOWS A 24 GALLON TREE, MODIFY DETAIL IF LARGER TREE IS PROPOSED
3. KEEP MULCH 4"–6" AWAY FROM TRUNK & TAPER @ ROOTBALL
4. MINIMUM BRANCHING HEIGHT 72" ABOVE ACCESSIBLE SURFACE

1 TREE ON GRADE

1/2" = 1'–0"

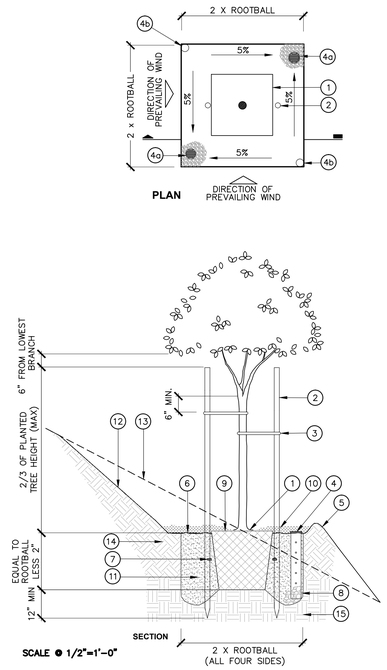

1. TREE AND ROOTBALL
2. TREE STAKES (2); LOCATE ON WINDWARD SIDE OF TREE
3. TREE TIES PER SPECIFICATIONS
4a. (2) 4" DIA. AERATION/ BREATHER TUBES WITH GRATE CAPS PER SPECS. WRAP PIPE IN FILTER FABRIC SOCK, KNOTTED AT THE TOP. LEAVE AERATION TUBE HOLLOW.
4b. (2) IRRIGATION BUBBLERS; REFER TO IRRIGATION PLANS. AERATION TUBES AND BUBBLERS SHALL BE SYMMETRICAL
5. 4" HIGH EARTH BERM @ EDGE OF PLANT PIT, FIRMLY COMPACTED.
6. FINISH GRADE
7. PLANT TABLETS PER SPECIFICATIONS 6" BELOW GRADE
8. 1 CU. FT. CRUSHED AGGREGATE
9. SET ROOTBALL @ 2" ABOVE FINISH GRADE
10. MULCH PER SPECIFICATIONS
11. PLANTING BACKFILL MIX PER SPECIFICATIONS
12. LAYBACK SLOPE BEHIND PLANT PIT AS NEEDED TO PREVENT SOIL SLUFFING.
13. LINE OF SLOPE BEYOND/ OR EXISTING SLOPE
14. RIPPED AND RECOMPACTED SUBGRADE PER SPECIFICATIONS

NOTES:

1. REFER TO PLANTING SPECIFICATION FOR ADDITIONAL INFORMATION
2. DETAIL SHOWS A 24 GALLON TREE, MODIFY DETAIL IF LARGER TREE IS PROPOSED
3. KEEP MULCH 4"–6" AWAY FROM STEMS & TAPER @ ROOTBALL
4. MINIMUM BRANCHING HEIGHT 80" ABOVE ACCESSIBLE SURFACE

2 TREE ON SLOPE

1/2" = 1'–0"

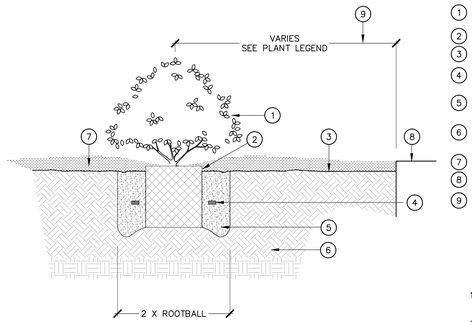

1. SHRUB
2. SET ROOTBALL @ 2" ABOVE FINISH GRADE
3. FINISH GRADE
4. PLANT TABLETS PER SPECIFICATONS 6" BELOW GRADE
5. PLANTING BACKFILL MIX PER SPECS.
6. RIPPED AND RECOMPACTED SUBGRADE PER SPECS
7. MULCH PER SPECIFICATIONS
8. ADJACENT PAVING SURFACE
9. OFFSET FROM EDGE OF PAVING. SEE PLANT LEGEND FOR OFFSET DISTANCE.

NOTES:

1. REFER TO PLANTING SPECIFICATION FOR ADDITIONAL INFORMATION
2. DETAIL SHOWS A 5 GALLON ROOTBALL
3. KEEP MULCH 4"–6" AWAY FROM STEMS & TAPER @ ROOTBALL

3 SHRUB ON GRADE

1" = 1'–0"

1. SHRUB
2. SET ROOTBALL CROWN 1" ABOVE FINISH GRADE, AT EXISTING SLOPE LEVEL.
3. 4" HIGH EARTH BERM @ EDGE OF PLANT PIT, FIRMLY COMPACTED.
4. FINISH GRADE
5. PLANT TABLETS PER SPECS.
6. PLANTING BACK FILL MIX PER SPECIFICATIONS
7. LAYBACK SLOPE BEHIND PLANT PIT AS NEEDED TO PREVENT SOIL SLUFFING.
8. LINE OF SLOPE BEYOND/ OR EXISTING SLOPE.
9. RIPPED AND RECOMPACTED SUBGRADE PER SPECS.
10. MULCH PER SPECS.
11. COMPACTED SUBGRADE PER SPECS.

NOTES:

1. REFER TO PLANTING SPECIFICATION FOR ADDITIONAL INFORMATION
2. DETAIL SHOWS A 5 GALLON ROOTBALL
3. KEEP MULCH 4"–0" AWAY FROM STEMS & TAPER @ ROOTBALL

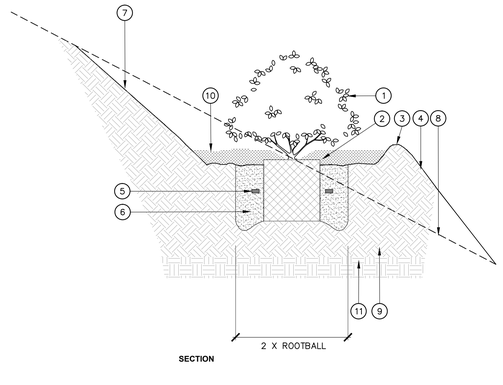

4 SHRUB ON SLOPE

1" = 1'–0"

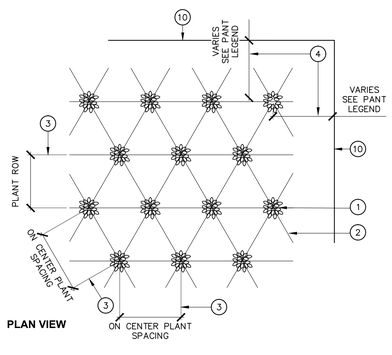

1. GROUNDCOVER PLANT
2. TRIANGULAR SPACING (TYP.)
3. ON CENTER PLANT SPACING & PLANT ROW, REFER TO GROUND COVER SPACING CHART BELOW.
4. OFFSET FROM EDGE OF PAVING VARIES. SEE PLANT LEGEND FOR SPECIFIC OFFSET DISTANCES.
5. SET ROOTBALL CROWN ABOVE FINISH GRADE
6. MULCH PER SPECIFICATIONS
7. ROOTBALL
8. FINISH GRADE
9. PLANT TABLETS PER SPECIFICATIONS
10. ADJACENT PAVING
11. SOIL PER SPECS

NOTES:

1) REFER TO PLANTING SPECIFICATION FOR ADDITIONAL INFORMATION.

2) KEEP MULCH 2" AWAY FROM STEMS & TAPER @ ROOTBALL

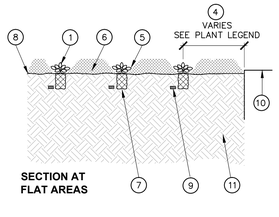

GROUND COVER SPACING

ON CENTER PLANT SPACING	PLANT ROW
8" O.C.	6.93" O.C
12" O.C.	10.4" O.C
18" O.C.	15.6" O.C
24" O.C.	20.8" O.C
36" O.C.	31.0" O.C
48" O.C.	36.33" O.C
60" O.C.	60.25" O.C

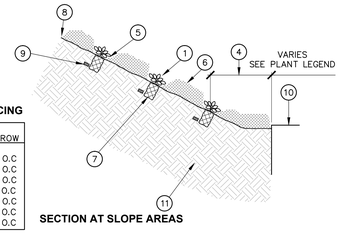

5 GROUNDCOVER

1" = 1'–0"

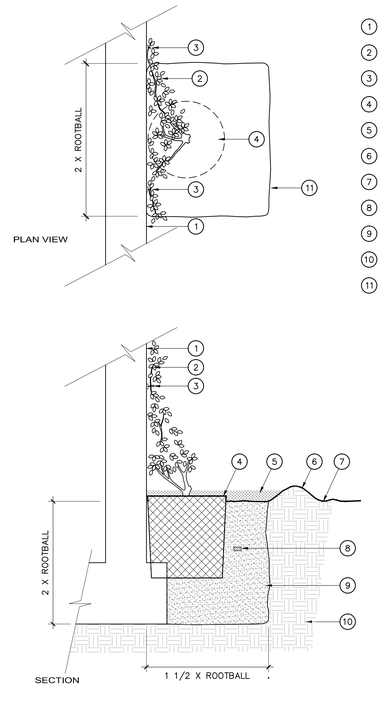

1. WALL, COLUMN, FENCE OR POST
2. VINE PER PLAN
3. VINE TIE PER SPECIFICATIONS
4. SET ROOTCROWN 1" ABOVE FINISH GRADE
5. MULCH PER SPECIFICATIONS
6. 6" HIGH EARTH BERM
7. FINISH GRADE
8. PLANT TABLETS PER SPECIFICATIONS
9. PLANTING BACKFILL MIX PER SPECIFICATIONS
10. COMPACTED SUBGRADE PER CIVIL ENGINEER
11. PLANTING PIT

NOTES:

1) REFER TO PLANTING SPECIFICATION FOR ADDITIONAL INFORMATION.

2) KEEP MULCH 2" AWAY FROM STEMS & TAPER @ ROOTBALL

6 VINE PLANTING

1" = 1'–0"

PICO BRANCH LIBRARY

Virginia Avenue Park
Santa Monica, CA 90404

PROJECT

KoningEizenberg Architecture
1454 25th St, Santa Monica, CA 90404
310.828.6131 info@kearch.com
310.828.0719 fax www.kearch.com

ARCHITECT'S PROJECT NO.
1001

ARCHITECT

All designs, ideas, arrangements and plans indicated by these drawings are the property and copyright of the Architect and shall neither be used on any other work nor be disclosed to any other person for any use whatsoever without written permission.

Koning Eizenberg Architecture and/or its principals and employees waives any and all liability or responsibility for problems that may occur when these plans, drawings, specifications, and/or designs are followed without the professional's guidance with ambiguities, or conflicts which are alleged.

SPURLOCK POIRIER
Landscape Architects
2102 Hancock Street
San Diego, CA 92110
619.681.0090
619.681.0096 fax

LICENSED LANDSCAPE ARCHITECT
ANDREW SPURLOCK – 1983
Signature
07/31/12
Renewal Date
Date
STATE OF CALIFORNIA

CONSULTANT

City of Santa Monica
Architecture Services

1437 4TH STREET, SUITE 300
SANTA MONICA, CA 90401
TEL. (310) 458-2205
FAX. (310) 399-1541
architecture@smgov.net

SUBMITTED BY : DATE : 20

APPROVED BY : Miriam Mulder, Architecture Services Manager DATE : 20

CITY OF SANTA MONICA
DEPARTMENT OF PUBLIC WORKS

REVIEWED BY : DATE : 20

REVIEWED BY : DATE : 20

REVIEWED BY : DATE : 20

CITY CLIENT

NO.	DATE	BY	DESCRIPTION

REVISIONS

ISSUE
65% CONSTRUCTION DOCUMENTS / BID SET

DATE
01/23/2012

DRAWING NO. **6693**

SHEET OF SHEETS

SHEET TITLE
Planting Details

SHEET NO.
L3.03

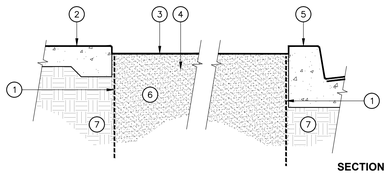

SECTION

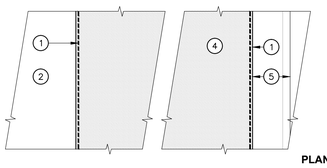

PLAN

1. 24" HIGH ROOT BARRIER WHERE ABUTTING PAVING OR MOW EDGE 10' LENGTH TYPICAL
2. CONCRETE PAVING
3. FINISH GRADE
4. PLANTING AREA
5. CONCRETE CURB
6. AMENDED BACKFILL MIX PER SPECIFACATION (AT LAWN AREAS ONLY – 12" DEPTH)
7. COMPACTED SUBGRADE PER GEOTECHNICAL REPORT

NOTES:

1. THIS ROOTBARRIER IS FOR USE IN ON-GRADE LANDSCAPE APPLICATIONS ONLY. REFER TO PLANTING SPECIFICATIONS FOR ROOT BARRIER PRODUCT AND SIZE.

2. REFER TO PLANS FOR SPECIFIC HARDSCAPE/BARRIER RELATIONSHIPS; DETAIL IS DIAGRAMMATIC.

3. TRIM TOP OF BARRIER TO BE 1/2" BELOW FINISHED GRADE.

1 TREE ROOT BARRIER

1" = 1'-0"

1. CONCRETE PAVING ARCH PLAN
2. BUILDING WALL
3. CONCRETE CURB W/ SIGNAGE WALL
4. CRUSHED AGGREGATE MULCH PER MULCH PLAN AND SPECIFICATIONS; TOP OF MULCH SHALL BE BETWEEN 1/4" AND 3/4" BELOW ADJACENT SURFACE OR HEADER
5. FINISH GRADE IN PLANTING AREA
6. AMENDED SOIL PER SPECS.
7. COMPACTED SUBGRADE PER GEOTECHNICAL REPORT

NOTES:

1. MULCH TYPE VARIES PER MULCH PLAN AND LEGEND.
2. MULCH DEPTH VARIES PER TYPE.

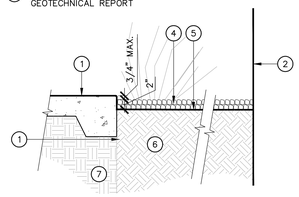

1" CRUSHED AGGREGATE MULCH

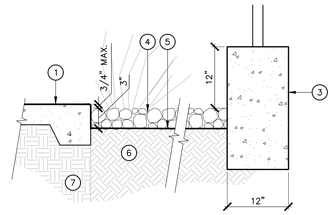

2"- 4" CRUSHED AGGREGATE MULCH

2 MULCH

1" = 1'-0"

PICO BRANCH LIBRARY

Virginia Avenue Park
Santa Monica, CA 90404

PROJECT

KoningEizenbergArchitecture
1454 25th St, Santa Monica, CA 90404

310.828.6131 info@kearch.com
310.828.0719 fax www.kearch.com

ARCHITECT'S PROJECT NO.
1001

ARCHITECT

All designs, ideas, arrangements and plans indicated by these drawings are the property and copyright of the Architect and shall neither be used on any other work nor be disclosed to any other person for any use whatsoever without written permission.

Koning Eizenberg Architecture and/or its principals and employees waives any and all liability or responsibility for problems that may occur when these plans, drawings, specifications, and/or designs are followed without the professional's guidance with ambiguities, or conflicts which are alleged.

SPURLOCK POIRIER
Landscape Architects

2102 Hancock Street
San Diego, CA 92110
619.681.0090
619.681.0096 fax

LICENSED LANDSCAPE ARCHITECT
ANDREW SPURLOCK 1983
STATE OF CALIFORNIA

Signature
07/31/12
Renewal Date

Date

CONSULTANT

City of
Santa Monica
Architecture Services

1437 4TH STREET, SUITE 300
SANTA MONICA, CA 90401
TEL. (310) 458-2205
FAX. (310) 399-1541
architecture@smgov.net

SUBMITTED BY : DATE : 20

APPROVED BY : DATE : 20
Miriam Mulder,
Architecture Services Manager

CITY OF SANTA MONICA
DEPARTMENT OF PUBLIC WORKS

REVIEWED BY : DATE : 20

REVIEWED BY : DATE : 20

REVIEWED BY : DATE : 20

CITY CLIENT

NO.	DATE	BY	DESCRIPTION

REVISIONS

ISSUE
65% CONSTRUCTION DOCUMENTS / BID SET

DATE
01/23/2012

DRAWING NO. **6693**

SHEET OF SHEETS

SHEET TITLE
Planting Details

SHEET NO.
L3.04

SHEET OF

DWG. NO. :

TITLE OF PROJECT :

EXISTING UTILITY NOTES:
THE UNDERGROUND UTILITIES SHOWN HAVE BEEN LOCATED FROM FIELD SURVEY INFORMATION AND EXISTING DRAWINGS. THE SURVEYOR MAKES NO GUARANTEE THAT THE UNDERGROUND UTILITIES SHOWN COMPROMISE ALL SUCH UTILITIES IN THE AREA EITHER IN SERVICE OR ABANDONED. THE SURVEYOR FURTHER DOES NOT WARRANT THAT THE UNDERGROUND UTILITIES SHOWN ARE IN THE EXACT LOCATION INDICATED ALTHOUGH HE DOES CERTIFY THAT THEY ARE LOCATED AS ACCURATELY AS POSSIBLE FROM THE INFORMATION AVAILABLE. UTILITIES AND THEIR APPURTANCES ARE IDENTIFIED AS FOUND AND AS LABELED IN THE FIELD. IT IS THE CONTRACTOR'S RESPONSIBILITY TO VERIFY AND LOCATE ALL UNDERGROUND UTILITIES PRIOR TO COMMENCING WORK.

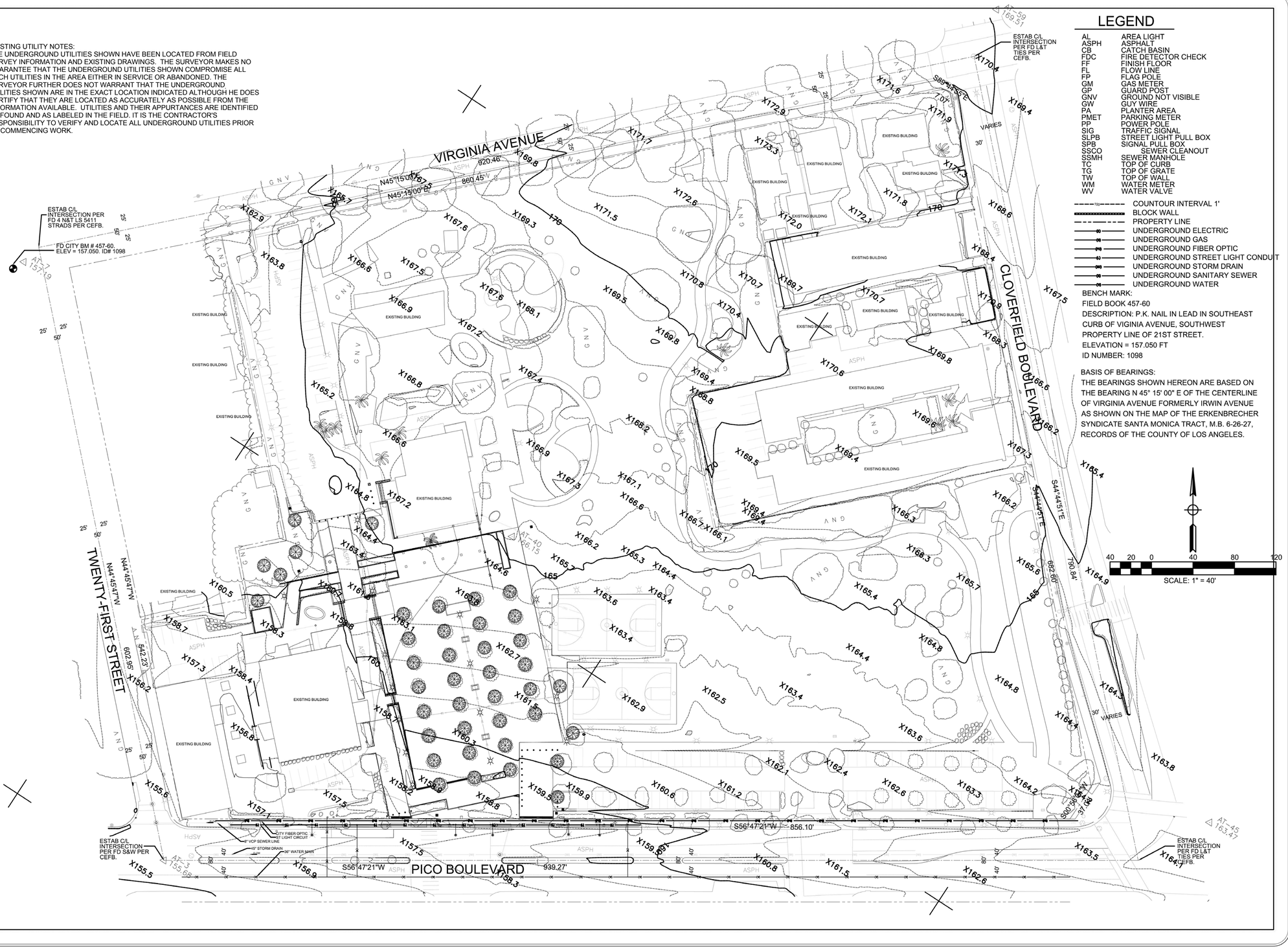

LEGEND

AL	AREA LIGHT
ASPH	ASPHALT
CB	CATCH BASIN
FDC	FIRE DETECTOR CHECK
FF	FINISH FLOOR
FL	FLOW LINE
FP	FLAG POLE
GM	GAS METER
GP	GUARD POST
GNV	GROUND NOT VISIBLE
GW	GUY WIRE
PA	PLANTER AREA
PMET	PARKING METER
PP	POWER POLE
SIG	TRAFFIC SIGNAL
SLPB	STREET LIGHT PULL BOX
SPB	SIGNAL PULL BOX
SSCO	SEWER CLEANOUT
SSMH	SEWER MANHOLE
TC	TOP OF CURB
TG	TOP OF GRATE
TW	TOP OF WALL
WM	WATER METER
WV	WATER VALVE

COUNTOUR INTERVAL 1'
BLOCK WALL
PROPERTY LINE
UNDERGROUND ELECTRIC
UNDERGROUND GAS
UNDERGROUND FIBER OPTIC
UNDERGROUND STREET LIGHT CONDUIT
UNDERGROUND STORM DRAIN
UNDERGROUND SANITARY SEWER
UNDERGROUND WATER

BENCH MARK:
FIELD BOOK 457-60
DESCRIPTION: P.K. NAIL IN LEAD IN SOUTHEAST CURB OF VIGINIA AVENUE, SOUTHWEST PROPERTY LINE OF 21ST STREET.
ELEVATION = 157.050 FT
ID NUMBER: 1098

BASIS OF BEARINGS:
THE BEARINGS SHOWN HEREON ARE BASED ON THE BEARING N 45° 15' 00" E OF THE CENTERLINE OF VIRGINIA AVENUE FORMERLY IRWIN AVENUE AS SHOWN ON THE MAP OF THE ERKENBRECHER SYNDICATE SANTA MONICA TRACT, M.B. 6-26-27, RECORDS OF THE COUNTY OF LOS ANGELES.

NO.	REVISIONS:	BY:	DATE:

SURVEYORS CERTIFICATE
THIS MAP REPRESENTS A SURVEY MADE BY ME OR UNDER MY DIRECTION IN CONFORMANCE WITH THE PROFESSIONAL LAND SURVEYORS ACT.
LELAND F. JOHNSON R.C.E. 13560 — EXP. 03/31/11

REGISTERED PROFESSIONAL ENGINEER — Leland F. Johnson — Exp. 3-31-11 — No. 13560 — CIVIL — STATE OF CALIFORNIA

"All Great Projects Start With JMC²"

PLANS PREPARED BY
JMC 2
John M. Chulakian Consultants, Inc.
411 N. Harbor Blvd. Suite 201
San Pedro, CA. 90731
P: 310.241.6550
F: 310.330.8871
www.jmc-2.com

PROJECT: PICO BRANCH LIBRARY
SHEET TITLE: AERIAL TOPOGRAPHIC SURVEY

PROJECT NO.	20100026.00
SCALE	1" = 40'
DATE	2-8-2011
DESIGNED BY	
DRAWN BY	MB
CHECKED BY	LFJ
SHEET NO.	1 OF 2 SHTS

PICO BRANCH LIBRARY

2201 Pico Blvd.
Santa Monica, CA 90404

PROJECT

KoningEizenbergArchitecture
1454 29th St, Santa Monica, CA 90404
310.828.6131 info@kearch.com
310.828.0719 fax www.kearch.com

ARCHITECT'S PROJECT NO.
1001

ARCHITECT

All designs, ideas, arrangements and plans indicated by these drawings are the property and copyright of the Architect and shall neither be used on any other work nor be disclosed to any other person for any use whatsoever without written permission.

Koning Eizenberg Architecture and/or its principals and employees waives any and all liability or responsibility for problems that may occur when these plans, drawings, specifications, and/or designs are followed without the professional's guidance with ambiguities, or conflicts which are alleged.

CONSULTANT

City of Santa Monica Architecture Services
1437 4TH STREET, SUITE 300
SANTA MONICA, CA 90401
TEL. (310) 458-2205
FAX. (310) 399-1541
architecture@smgov.net

DATE : _____ 20__
SUBMITTED BY :

DATE : _____ 20__
APPROVED BY :
Miriam Mulder,
Architecture Services Manager
CITY OF SANTA MONICA
DEPARTMENT OF PUBLIC WORKS

REVIEWED BY : DATE : _____ 20__

REVIEWED BY : DATE : _____ 20__

REVIEWED BY : DATE : _____ 20__

CITY CLIENT

NO.	DATE	BY	DESCRIPTION

REVISIONS

ISSUE
65% CONSTRUCTION DOCUMENTS / BID SET

DATE
01/23/2012

DRAWING NO. **6693**

SHEET OF SHEETS

SHEET TITLE
SITE SURVEY

SHEET NO.
A1.00

SITE SURVEY | 1

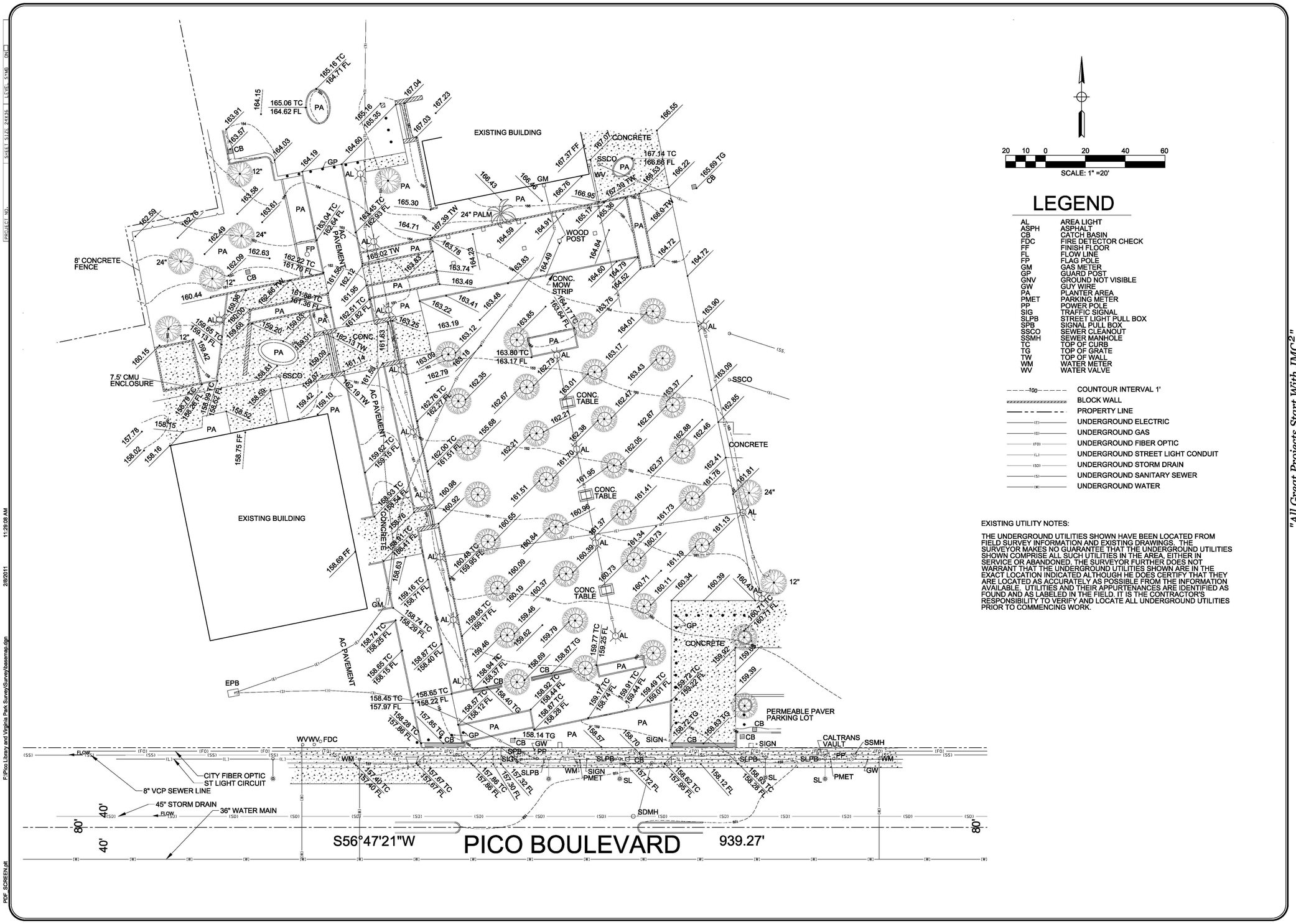

SCALE: 1" =20'

LEGEND

AL	AREA LIGHT
ASPH	ASPHALT
CB	CATCH BASIN
FDC	FIRE DETECTOR CHECK
FF	FINISH FLOOR
FL	FLOW LINE
FP	FLAG POLE
GM	GAS METER
GP	GUARD POST
GNV	GROUND NOT VISIBLE
GW	GUY WIRE
PA	PLANTER AREA
PMET	PARKING METER
PP	POWER POLE
SIG	TRAFFIC SIGNAL
SLPB	STREET LIGHT PULL BOX
SPB	SIGNAL PULL BOX
SSCO	SEWER CLEANOUT
SSMH	SEWER MANHOLE
TC	TOP OF CURB
TG	TOP OF GRATE
TW	TOP OF WALL
WM	WATER METER
WV	WATER VALVE

100	COUNTOUR INTERVAL 1'
	BLOCK WALL
	PROPERTY LINE
(E)	UNDERGROUND ELECTRIC
(G)	UNDERGROUND GAS
(FO)	UNDERGROUND FIBER OPTIC
(L)	UNDERGROUND STREET LIGHT CONDUIT
(SD)	UNDERGROUND STORM DRAIN
(S)	UNDERGROUND SANITARY SEWER
(W)	UNDERGROUND WATER

EXISTING UTILITY NOTES:

THE UNDERGROUND UTILITIES SHOWN HAVE BEEN LOCATED FROM FIELD SURVEY INFORMATION AND EXISTING DRAWINGS. THE SURVEYOR MAKES NO GUARANTEE THAT THE UNDERGROUND UTILITIES SHOWN COMPRISE ALL SUCH UTILITIES IN THE AREA, EITHER IN SERVICE OR ABANDONED. THE SURVEYOR FURTHER DOES NOT WARRANT THAT THE UNDERGROUND UTILITIES SHOWN ARE IN THE EXACT LOCATION INDICATED ALTHOUGH HE DOES CERTIFY THAT THEY ARE LOCATED AS ACCURATELY AS POSSIBLE FROM THE INFORMATION AVAILABLE. UTILITIES AND THEIR APPURTENANCES ARE IDENTIFIED AS FOUND AND AS LABELED IN THE FIELD. IT IS THE CONTRACTOR'S RESPONSIBILITY TO VERIFY AND LOCATE ALL UNDERGROUND UTILITIES PRIOR TO COMMENCING WORK.

REVISIONS: NO. | BY: | DATE:

SURVEYORS CERTIFICATE
THIS MAP CORRECTLY REPRESENTS A SURVEY MADE BY ME OR UNDER MY DIRECTION IN CONFORMANCE WITH THE PROFESSIONAL LAND SURVEYORS ACT.

LELAND F. JOHNSON R.C.E. 13560 EXP. 03/31/11

REGISTERED PROFESSIONAL ENGINEER LELAND F. JOHNSON No. 13560 Exp. 3-31-11 CIVIL STATE OF CALIFORNIA

"All Great Projects Start With JMC²"

PLANS PREPARED BY
JMC²
John M. Cruikshank Consultants, Inc.
411 N. Harbor Blvd, Suite 201
San Pedro, CA 90731
P: 310.241.6550
F: 310.303.3877
www.jmc-2.com

PROJECT: PICO BRANCH LIBRARY

SHEET TITLE: TOPOGRAPHIC SURVEY

PROJECT NO. 20100026.00
SCALE 1" = 20'
DATE 2-8-2011
DESIGNED BY
DRAWN BY MB
CHECKED BY LFJ
SHEET NO. 2 OF 2 SHTS

PICO BRANCH LIBRARY

2201 Pico Blvd.
Santa Monica, CA 90404

PROJECT

KoningEizenbergArchitecture
1454 29th St, Santa Monica, CA 90404
310.828.6131 info@kearch.com
310.828.0719 fax www.kearch.com

ARCHITECT'S PROJECT NO.
1001

ARCHITECT

All designs, ideas, arrangements and plans indicated by these drawings are the property and copyright of the Architect and shall neither be used on any other work nor be disclosed to any other person for any use whatsoever without written permission.

Koning Eizenberg Architecture and/or its principals and employees waives any and all liability or responsibility for problems that may occur when these plans, drawings, specifications, and/or designs are followed without the professional's guidance with ambiguities, or conflicts which are alleged.

CONSULTANT

City of Santa Monica Architecture Services
1437 4TH STREET, SUITE 300
SANTA MONICA, CA 90401
TEL. (310) 458-2205
FAX. (310) 399-1541
architecture@smgov.net

DATE : 20
SUBMITTED BY :

DATE : 20
APPROVED BY :
Miriam Mulder,
Architecture Services Manager

CITY OF SANTA MONICA
DEPARTMENT OF PUBLIC WORKS

REVIEWED BY : DATE : 20

REVIEWED BY : DATE : 20

REVIEWED BY : DATE : 20

CITY CLIENT

NO.	DATE	BY	DESCRIPTION

REVISIONS

ISSUE
65% CONSTRUCTION DOCUMENTS / BID SET

DATE
01/23/2012

DRAWING NO. 6693

SHEET OF SHEETS

SHEET TITLE
ENLARGED SITE SURVEY

SHEET NO.
A1.00a

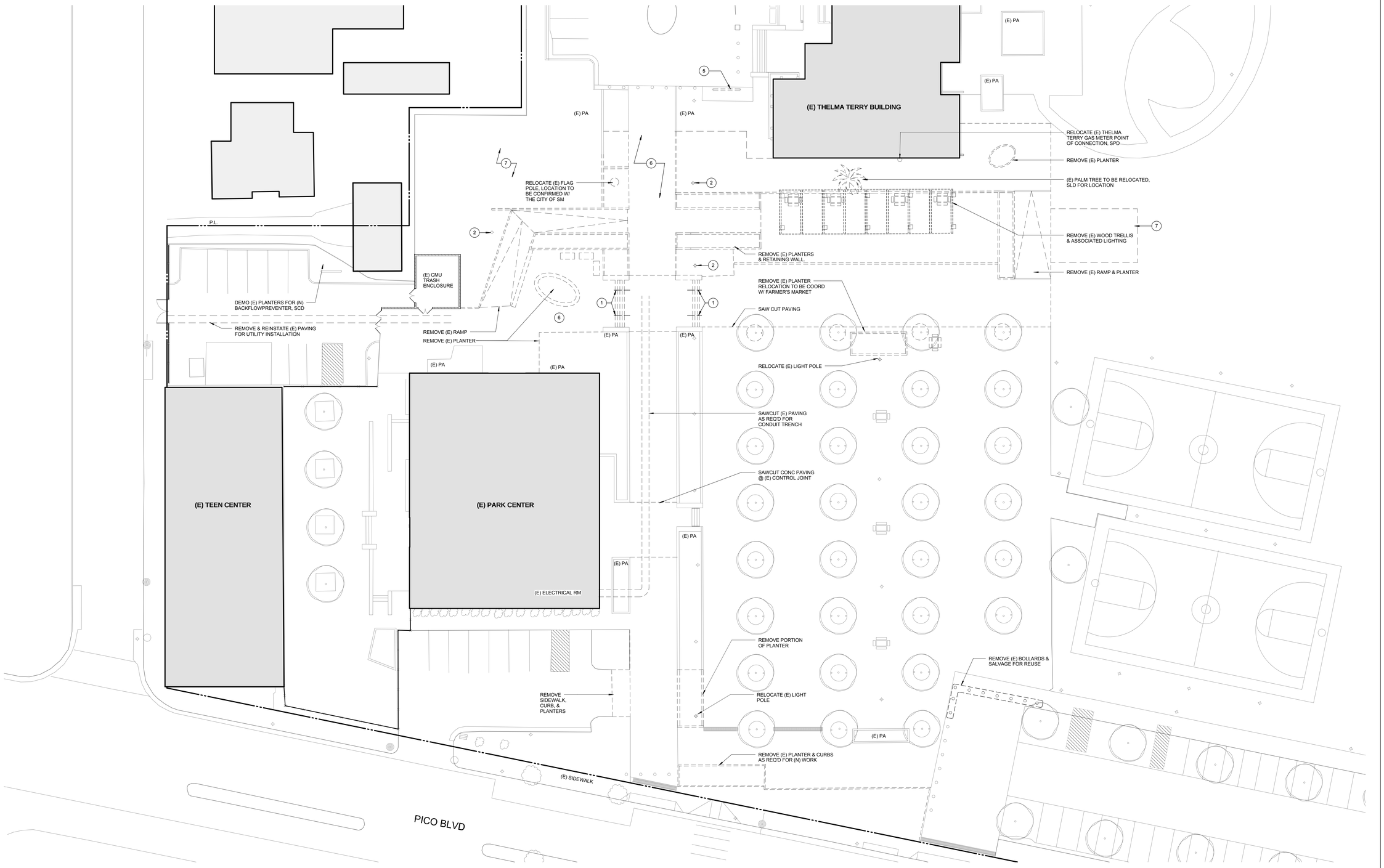

SITE DEMOLITION PLAN

0 4' 8' 16' | 1/16" = 1'-0" | 1

SITE DEMOLITION LEGEND

- - - - - - DEMOLITION

SITE DEMOLITION PLAN NOTES

1. PAVING DEMOLITION IS PROVIDED AS A GUIDE ONLY & DOES NOT NECESSARILY COVER ALL UTILITY TRENCHING. CONTRACTOR TO VERIFY FULL EXTENT OF UTILITY TRENCHING REQ'D.

2. SEE CIVIL DRAWINGS FOR ADDITIONAL DEMOLITION REQUIREMENTS.

SITE DEMOLITION PLAN KEYNOTES

1. SALVAGE HANDRAILS FOR REINSTALLATION
2. REMOVE (E) LIGHT POLE
3. (E) TREE TO REMAIN
4. (E) HANDRAILS TO REMAIN
5. REMOVE (E) BIKE RACK
6. DEMOLISH (E) PAVING AS REQ'D
7. REMOVE (E) GRASS AREA AS REQ'D FOR (N) WORK, SEE LANDSCAPE DWGS

PICO BRANCH LIBRARY

2201 Pico Blvd.
Santa Monica, CA 90404

PROJECT

KoningEizenbergArchitecture
1454 25th St, Santa Monica, CA 90404

310.828.6131 info@kearch.com
310.828.0719 fax www.kearch.com

ARCHITECT'S PROJECT NO.
1001

ARCHITECT

All designs, ideas, arrangements and plans indicated by these drawings are the property and copyright of the Architect and shall neither be used on any other work nor be disclosed to any other person for any use whatsoever without written permission.

Koning Eizenberg Architecture and/or its principals and employees waives any and all liability or responsibility for problems that may occur when these plans, drawings, specifications, and/or designs are followed without the professional's guidance with ambiguities, or conflicts which are alleged.

CONSULTANT

City of Santa Monica
Architecture Services

1437 4TH STREET, SUITE 300
SANTA MONICA, CA 90401
TEL. (310) 458-2205
FAX. (310) 399-1541
architecture@smgov.net

SUBMITTED BY : DATE : 20

APPROVED BY : DATE : 20
Miriam Mulder,
Architecture Services Manager

CITY OF SANTA MONICA
DEPARTMENT OF PUBLIC WORKS

REVIEWED BY : DATE : 20

REVIEWED BY : DATE : 20

REVIEWED BY : DATE : 20

CITY CLIENT

NO.	DATE	BY	DESCRIPTION

REVISIONS

ISSUE
65% CONSTRUCTION DOCUMENTS / BID SET

DATE
01/23/2012

DRAWING NO. **6693**

SHEET OF SHEETS

SHEET TITLE
SITE DEMOLTION PLAN

SHEET NO.
A1.01

SHEET OF

DWG NO. - -

TITLE OF PROJECT

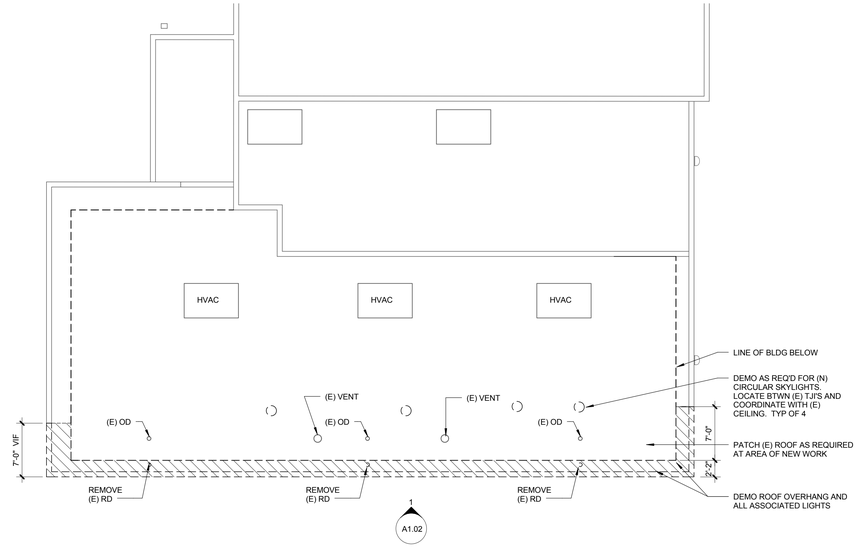

PROJECT NORTH N

THELMA TERRY DEMOLTION ROOF PLAN

0 2' 4' 8' | 1/8" = 1'-0" | 3

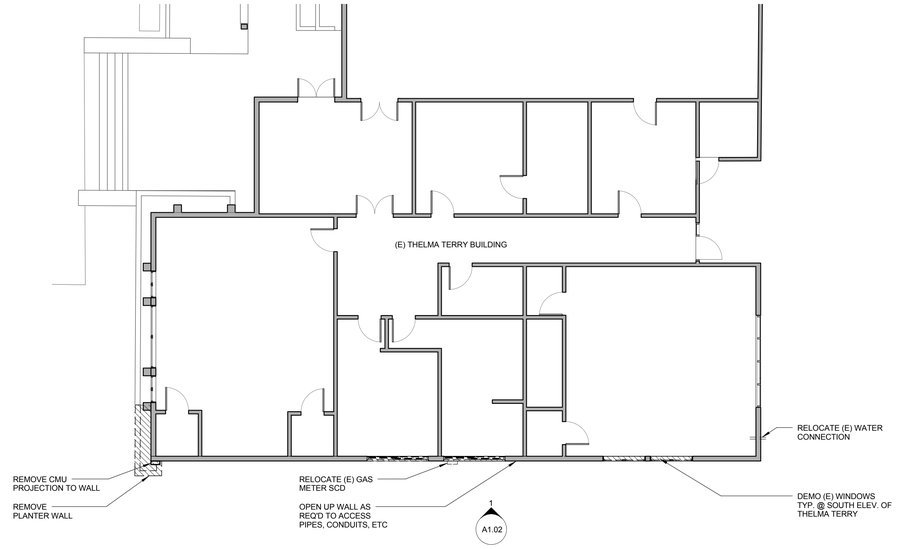

PROJECT NORTH N

THELMA TERRY DEMOLITION FLOOR PLAN

0 2' 4' 8' | 1/8" = 1'-0" | 2

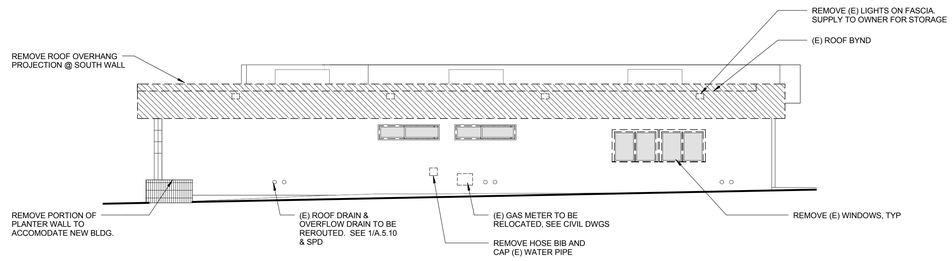

THELMA TERRY DEMOLTION @ SOUTH ELEVATION

0 2' 4' 8' | 1/8" = 1'-0" | 1

LEGEND

(E) DEMOLITION

PICO BRANCH LIBRARY

2201 Pico Blvd.
Santa Monica, CA 90404

PROJECT

KoningEizenbergArchitecture
1454 25th St, Santa Monica, CA 90404

310.828.6131 info@kearch.com
310.828.0719 fax www.kearch.com

ARCHITECT'S PROJECT NO.
1001

ARCHITECT

All designs, ideas, arrangements and plans indicated by these drawings are the property and copyright of the Architect and shall neither be used on any other work nor be disclosed to any other person for any use whatsoever without written permission.

Koning Eizenberg Architecture and/or its principals and employees waives any and all liability or responsibility for problems that may occur when these plans, drawings, specifications, and/or designs are followed without the professional's guidance with ambiguities, or conflicts which are alleged.

CONSULTANT

City of Santa Monica Architecture Services

1437 4TH STREET, SUITE 300
SANTA MONICA, CA 90401
TEL. (310) 458-2205
FAX. (310) 399-1541
architecture@smgov.net

SUBMITTED BY : DATE : 20

APPROVED BY : DATE : 20
Miriam Mulder,
Architecture Services Manager

CITY OF SANTA MONICA
DEPARTMENT OF PUBLIC WORKS

REVIEWED BY : DATE : 20

REVIEWED BY : DATE : 20

REVIEWED BY : DATE : 20

CITY CLIENT

NO.	DATE	BY	DESCRIPTION

REVISIONS

ISSUE
65% CONSTRUCTION DOCUMENTS / BID SET

DATE
01/23/2012

DRAWING NO. **6693**

SHEET OF SHEETS

SHEET TITLE
THELMA TERRY DEMOLITION PLANS & ELEVATIONS

SHEET NO.
A1.02

SHEET OF

DWG NO. -

TITLE OF PROJECT

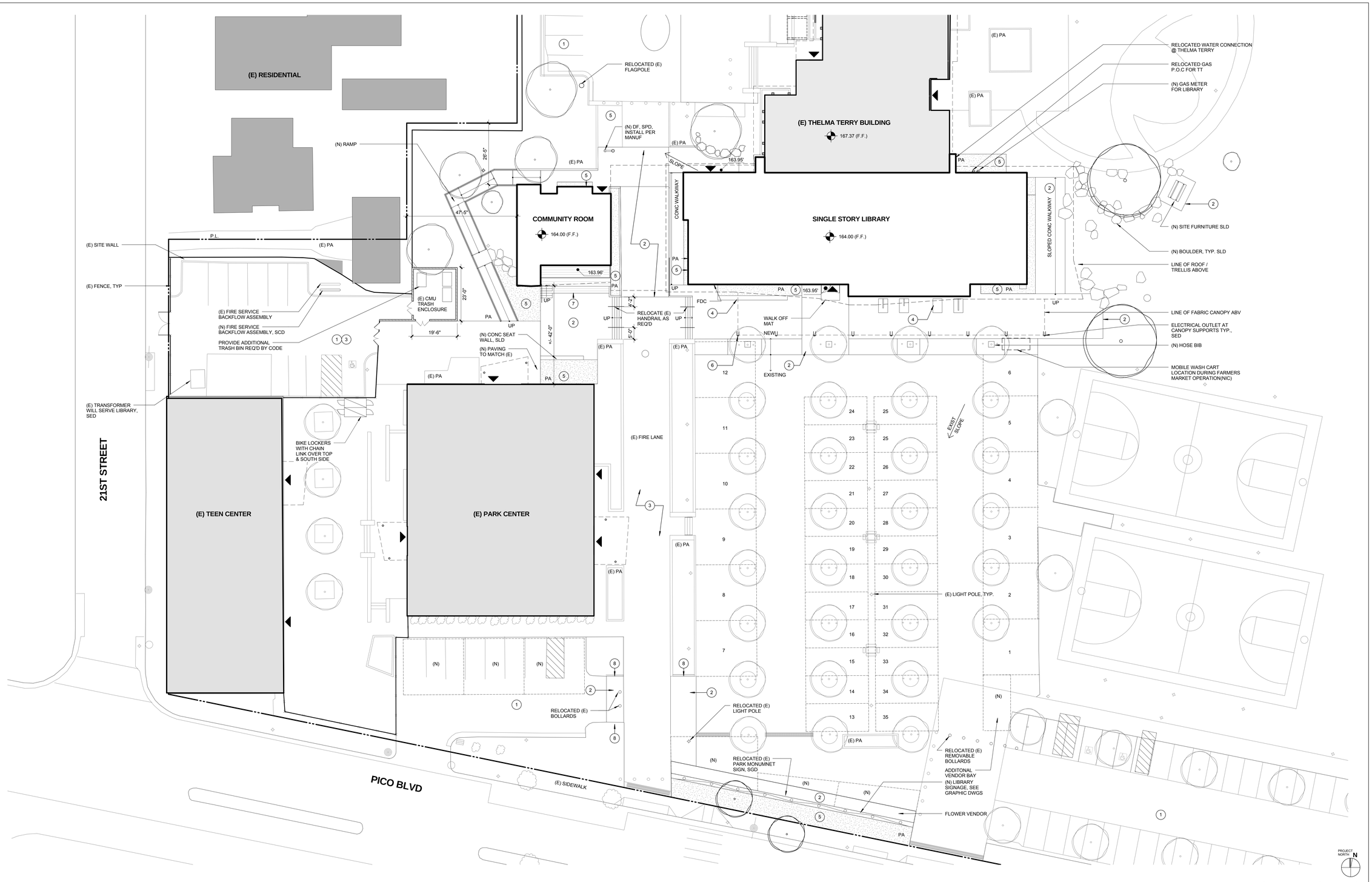

SITE PLAN & FARMERS MARKET LAYOUT

0 4' 8' 16' 1/16" = 1'-0" 1

FARMERS MARKET STALLS				
TYPE	EXISTING QTY	PROPOSED QTY	CHANGE	DURING CONSTRUCTION
COFFEE STALL UNDER CANOPY	0	1	1	0
FLOWER BAYS @ SOUTH	2	3	+1	0
HOT FOOD STALLS @ NE	3	0	-3	0
LARGE BAYS	13	13	0	13
SMALL BAYS	26	27	+1	27
TEMPORARY BAYS WEST OF FIRE LANE	0	0	0	3 (CAN BE 4 STALLS)
TOTALS	44	44	0	43

SEE SHEET A1.04 FOR FARMERS MARKET LAYOUT DURING CONSTRUCTION

SITE PLAN LEGEND

- (N) TREE
- (E) TREE
- (N) LIGHT POLE
- (E) LIGHT POLE
- BUILDING ENTRY
- (N) LANDSCAPE / PLANTING SLD

SITE PLAN GENERAL NOTES

1. SEE CIVIL DWGS FOR GRADING & UTILITIES
2. SEE LANDSCAPE DWGS FOR PLANTING TYPES & CONC PAVING SPECIFICATION
3. THIS PLAN INDICATES THE FARMERS MARKET STALLS UPON COMPLETION.

SITE PLAN KEYNOTES

1. (E) PARKING LOT
2. (N) CONC PAVING, SEE LANDSCAPE DWGS
3. PATCH (E) HARDSCAPE AS REQ'D FOR (N) WORK
4. (N) SITE FURNISHINGS, SEE LANDSCPAE DWGS
5. (N) PLANTED AREA, SEE LANDSCAPE DWGS
6. PTD STL CANOPY SUPPORTS WITH CUSTOM BIKE RACK, SEE 2/A3.00 F0R CANOPY ELEVATION
7. PRE-CAST CONC PLANKS AT "AMPHITHEATER"
8. (N) CURB TO MATCH EXISTING
9. (N) PAVING TO MATCH EXISTING

PICO BRANCH LIBRARY

2201 Pico Blvd.
Santa Monica, CA 90404

PROJECT

KoningEizenbergArchitecture
1454 25th St, Santa Monica, CA 90404
310.828.6131 info@kearch.com
310.828.0719 fax www.kearch.com

ARCHITECT'S PROJECT NO.
1001

ARCHITECT

All designs, ideas, arrangements and plans indicated by these drawings are the property and copyright of the Architect and shall neither be used on any other work nor be disclosed to any other person for any use whatsoever without written permission.

Koning Eizenberg Architecture and/or its principals and employees waives any and all liability or responsibility for problems that may occur when these plans, drawings, specifications, and/or designs are followed without the professional's guidance with ambiguities, or conflicts which are alleged.

CONSULTANT

City of Santa Monica Architecture Services
1437 4TH STREET, SUITE 300
SANTA MONICA, CA 90401
TEL. (310) 458-2205
FAX. (310) 399-1541
architecture@smgov.net

SUBMITTED BY : DATE : 20

APPROVED BY : Miriam Mulder, Architecture Services Manager DATE : 20

CITY OF SANTA MONICA
DEPARTMENT OF PUBLIC WORKS

REVIEWED BY : DATE : 20

REVIEWED BY : DATE : 20

REVIEWED BY : DATE : 20

CITY CLIENT

NO.	DATE	BY	DESCRIPTION

REVISIONS

ISSUE
65% CONSTRUCTION DOCUMENTS / BID SET

DATE
01/23/2012

DRAWING NO. 6693

SHEET OF SHEETS

SHEET TITLE
SITE PLAN

SHEET NO.
A1.03

SHEET OF

DWG NO. -

TITLE OF PROJECT

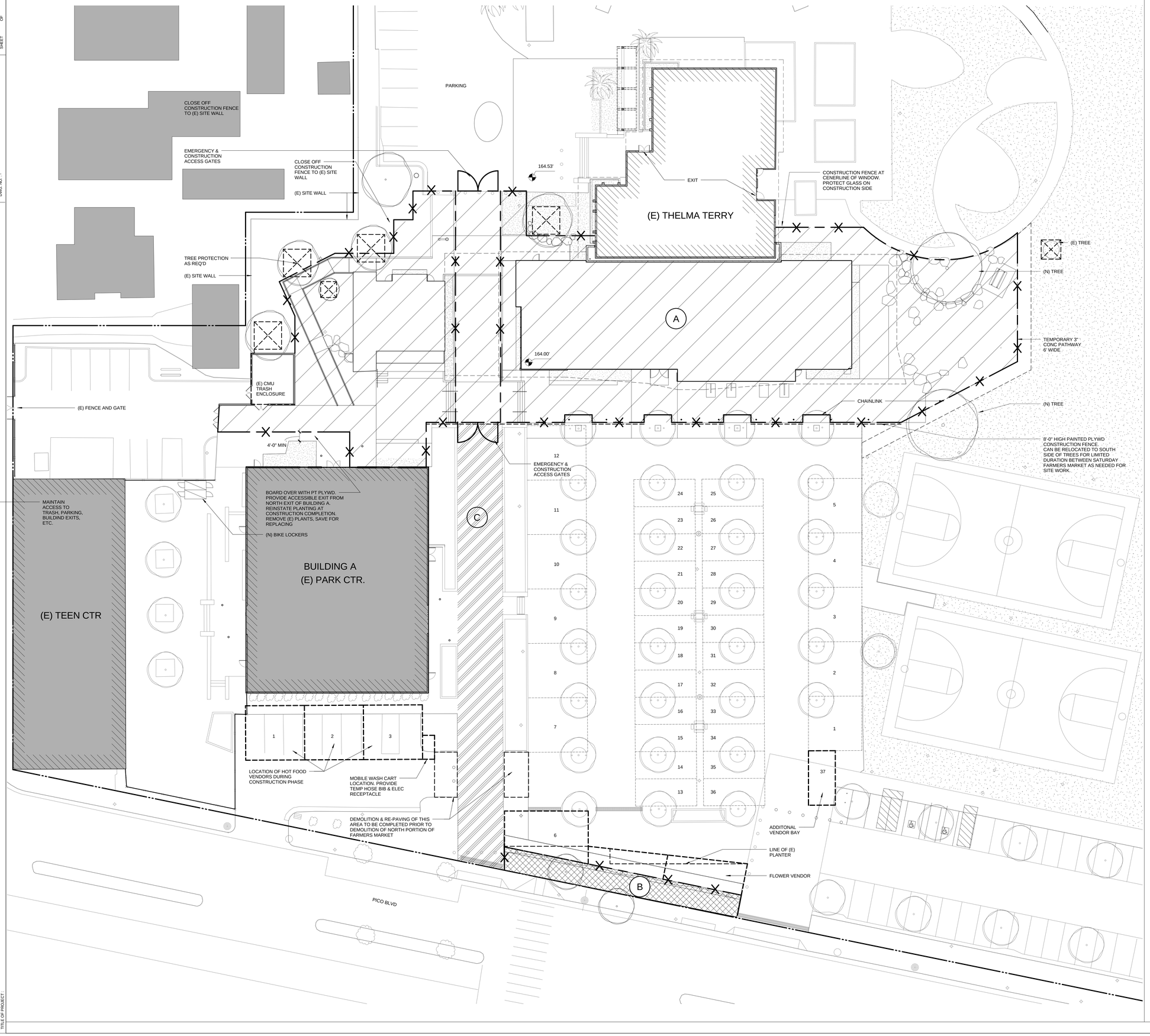

STAGING LEGEND

- A — FULL PERIOD CONSTRUCTION SITE
- B — SHORT TERM CONSTRUCTION AREA - 1 MONTH
- C — CONSTRUCTION AREA - OUTSIDE OF FARMERS' MARKET OPERATION HOURS ONLY(MON-FRI)
- PROTECTION REQ'D AT EXISTING TREES DURING CONSTRUCTION
- CONSTRUCTION BARRICADE
- TEMPORARY RELOCATION OF FARMERS MARKET STALLS

STAGING NOTES

1. FARMERS MARKET AREA WILL BE USED FOR 'FARMERS' MARKET ON A WEEKLY BASIS (SATURDAY MORNINGS). WORK IN FM AREA TO BE UNDERTAKEN OUTSIDE OF FM HOURS. AREA TO BE REINSTATED FOR FM USE.

2. THELMA TERRY, BUILDING A (PARK CENTER) TEEN CENTER, AND THE PARK WILL BE IN CONTINUOUS USE DURING CONSTRUCTION.

3. THIS PLAN INDICATED FARMERS MARKET ARRANGEMENT DURING CONSTRUCTION.

4. THE FARMER'S MARKET OPERATES EACH SATURDAY MORNING AND CONSTRUCTION ACTIVITIES MUST NOT INTERFERE WITH THE FARMERS MARKET OPERATION EXCEPT AS NOTED OR WITH PRIOR APPROVAL OR THE FARMERS MARKET MANAGER LAURA AVERY.

PICO BRANCH LIBRARY

2201 Pico Blvd.
Santa Monica, CA 90404

PROJECT

KoningEizenbergArchitecture
1454 25th St, Santa Monica, CA 90404
310.828.6131 info@kearch.com
310.828.0719 fax www.kearch.com

ARCHITECT'S PROJECT NO.
1001

ARCHITECT

All designs, ideas, arrangements and plans indicated by these drawings are the property and copyright of the Architect and shall neither be used on any other work nor be disclosed to any other person for any use whatsoever without written permission.

Koning Eizenberg Architecture and/or its principals and employees waives any and all liability or responsibility for problems that may occur when these plans, drawings, specifications, and/or designs are followed without the professional's guidance with ambiguities, or conflicts which are alleged.

CONSULTANT

City of Santa Monica Architecture Services
1437 4TH STREET, SUITE 300
SANTA MONICA, CA 90401
TEL. (310) 458-2205
FAX. (310) 399-1541
architecture@smgov.net

SUBMITTED BY : DATE : _____ 20 __

APPROVED BY : DATE : _____ 20 __
Miriam Mulder,
Architecture Services Manager

CITY OF SANTA MONICA
DEPARTMENT OF PUBLIC WORKS

REVIEWED BY : DATE : _____ 20 __

REVIEWED BY : DATE : _____ 20 __

REVIEWED BY : DATE : _____ 20 __

CITY CLIENT

NO.	DATE	BY	DESCRIPTION

REVISIONS

ISSUE
65% CONSTRUCTION DOCUMENTS / BID SET

DATE
01/23/2012

DRAWING NO. **6693**

SHEET OF SHEETS

SHEET TITLE
STAGING PLAN

SHEET NO.
A1.04

PROJECT NORTH N

STAGING PLAN 0 4' 8' 16' 1/16" = 1'-0" 1

SHEET OF

DWG. NO. -

TITLE OF PROJECT:

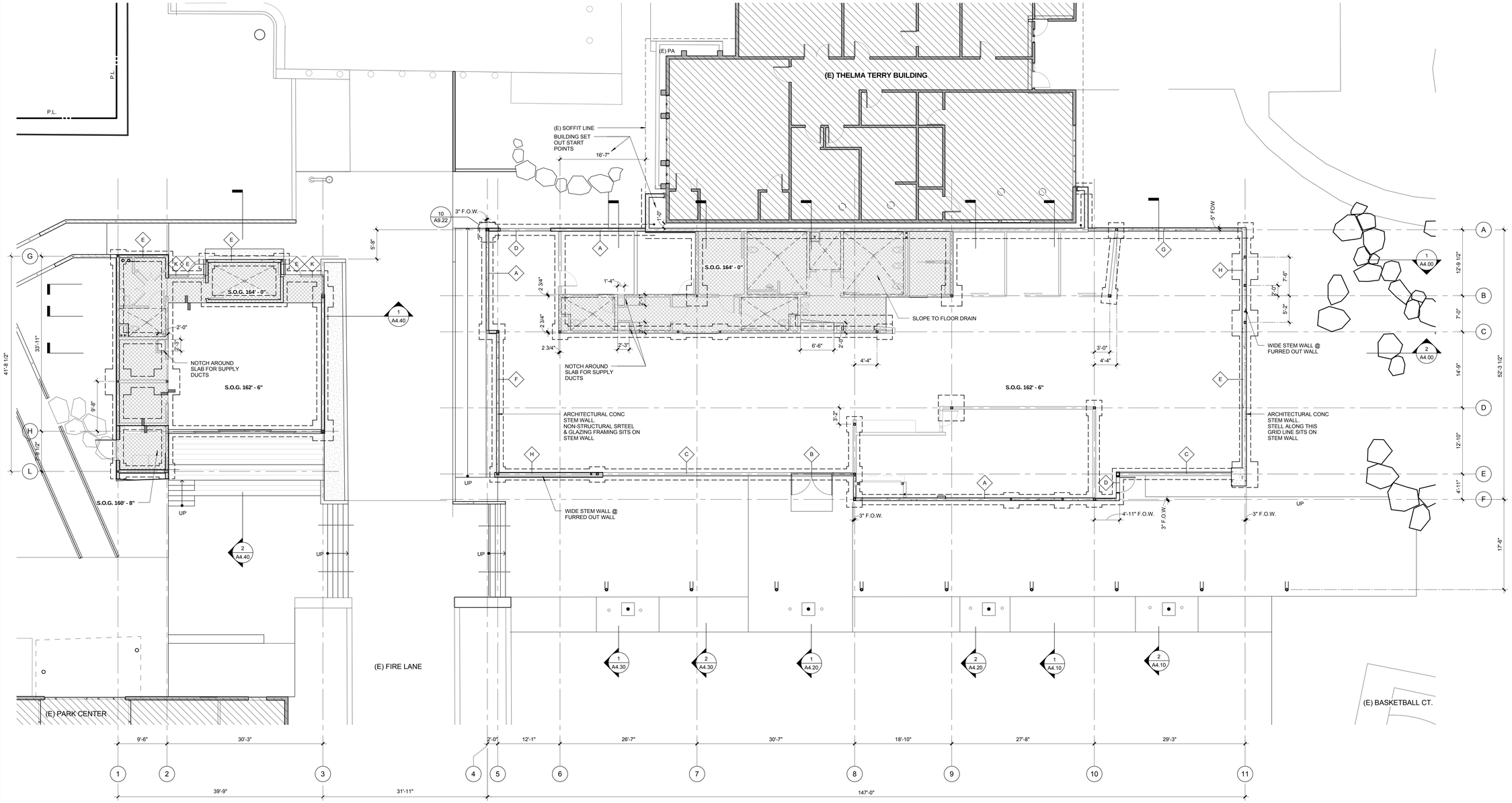

FOUNDATION/ SLAB PLAN

0 2' 4' 8' 1/8" = 1'-0" | 2

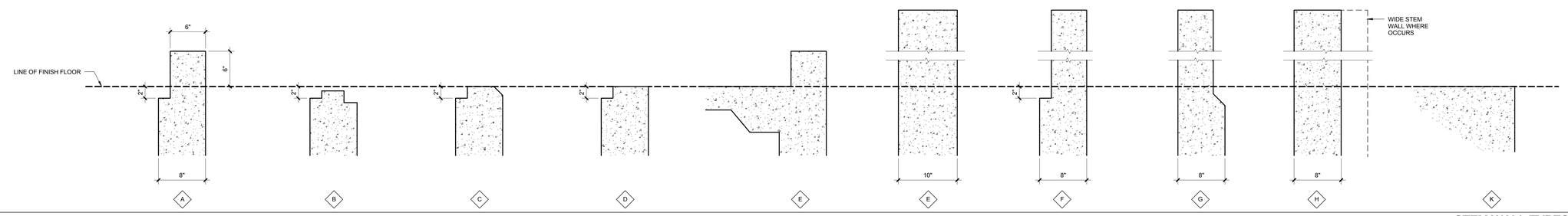

STEM WALL TYPES | 1

PICO BRANCH LIBRARY

2201 Pico Blvd.
Santa Monica, CA 90404

PROJECT

KoningEizenbergArchitecture
1454 25th St, Santa Monica, CA 90404

310.828.6131 info@kearch.com
310.828.0719 fax www.kearch.com

ARCHITECT'S PROJECT NO.
1001

ARCHITECT

All designs, ideas, arrangements and plans indicated by these drawings are the property and copyright of the Architect and shall neither be used on any other work nor be disclosed to any other person for any use whatsoever without written permission.

Koning Eizenberg Architecture and/or its principals and employees waives any and all liability or responsibility for problems that may occur when these plans, drawings, specifications, and/or designs are followed without the professional's guidance with ambiguities, or conflicts which are alleged.

CONSULTANT

City of Santa Monica
Architecture Services

1437 4TH STREET, SUITE 300
SANTA MONICA, CA 90401
TEL. (310) 458-2205
FAX. (310) 399-1541
architecture@smgov.net

SUBMITTED BY : DATE : 20

APPROVED BY : DATE : 20
Miriam Mulder,
Architecture Services Manager

CITY OF SANTA MONICA
DEPARTMENT OF PUBLIC WORKS

REVIEWED BY : DATE : 20

REVIEWED BY : DATE : 20

REVIEWED BY : DATE : 20

CITY CLIENT

NO.	DATE	BY	DESCRIPTION

REVISIONS

ISSUE
65% CONSTRUCTION DOCUMENTS / BID SET

DATE
01/23/2012

DRAWING NO. **6693**

SHEET OF SHEETS

SHEET TITLE
FOUNDATION / SLAB PLAN

SHEET NO.
A2.00

SHEET OF

DWG. NO. -

TITLE OF PROJECT

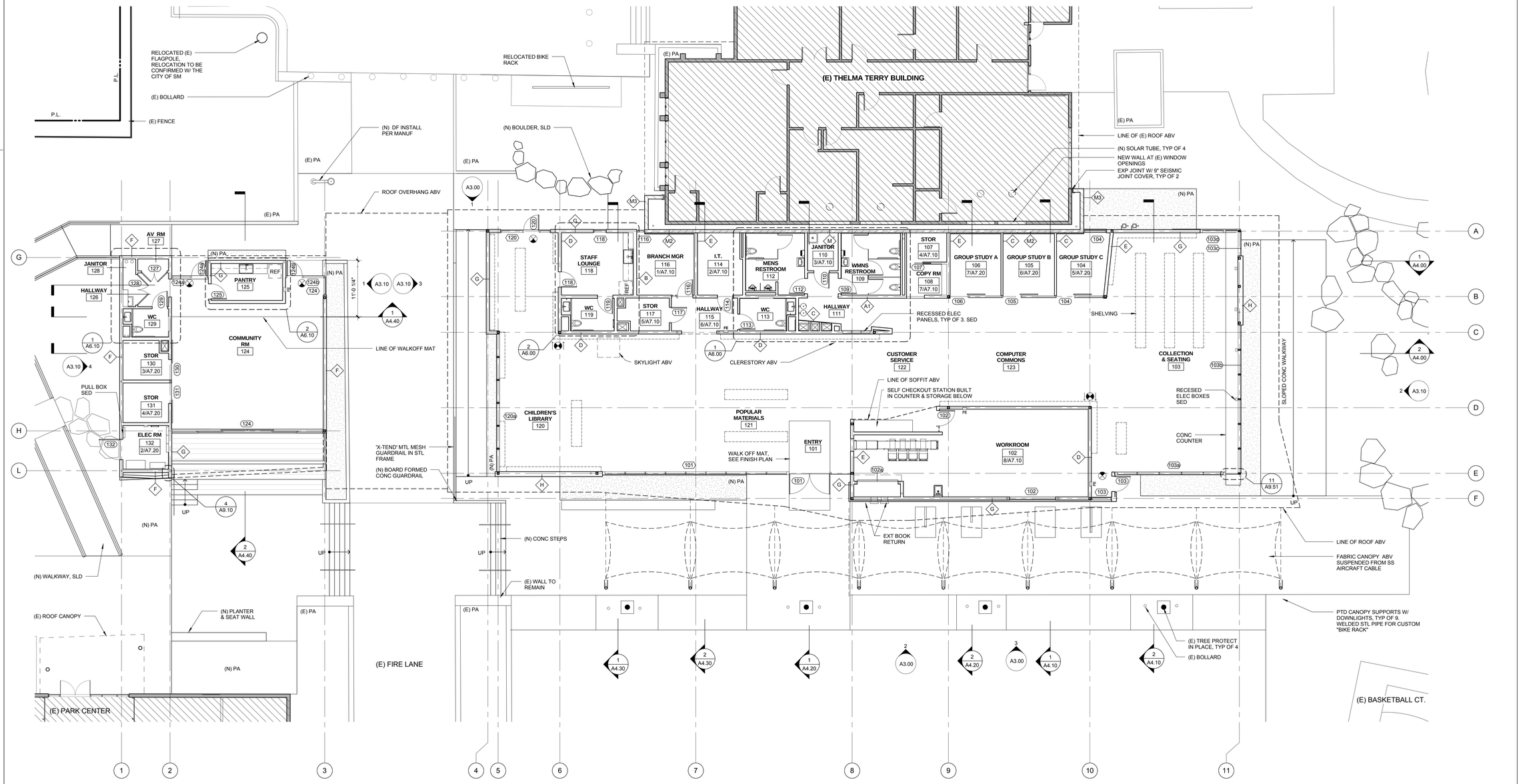

FLOOR PLAN

0 2' 4' 8' 1/8" = 1'-0" **1**

FLOOR PLAN GENERAL NOTES

1. SEE LANDSCAPE DRAWINGS FOR PAVING PLAN
2. SEE STRUCTURAL DRAWINGS FOR COLUMN AND SHEAR WALL LOCATIONS AND SIZES
3. SEE LIGHTING DRAWINGS, FOR LIGHTING LOCATIONS, TYPES, AND SIZES
4. SEE SURVEY FOR (E) TREE LOCATIONS & MISC SITE INFRASTRUCTURE
5. ALL WALLS TYPE (A) UNLESS NOTED OTHERWISE
6. SHELVING LOCATIONS SHOWN DASHED FOR COORDINATION

FLOOR PLAN LEGEND

- (E) BUILDING
- CMU FIRE WALL
- (N) WALLS
- (E) WALLS
- FE — RECESSED FIRE EXTINGUISHER CABINET

PICO BRANCH LIBRARY

2201 Pico Blvd.
Santa Monica, CA 90404

PROJECT

KoningEizenbergArchitecture
1454 25th St, Santa Monica, CA 90404
310.828.6131 info@kearch.com
310.828.0719 fax www.kearch.com

ARCHITECT'S PROJECT NO.
1001

ARCHITECT

All designs, ideas, arrangements and plans indicated by these drawings are the property and copyright of the Architect and shall neither be used on any other work nor be disclosed to any other person for any use whatsoever without written permission.

Koning Eizenberg Architecture and/or its principals and employees waives any and all liability or responsibility for problems that may occur when these plans, drawings, specifications, and/or designs are followed without the professional's guidance with ambiguities, or conflicts which are alleged.

CONSULTANT

City of Santa Monica Architecture Services
1437 4TH STREET, SUITE 300
SANTA MONICA, CA 90401
TEL. (310) 458-2205
FAX. (310) 399-1541
architecture@smgov.net

SUBMITTED BY : DATE : 20

APPROVED BY : Miriam Mulder, Architecture Services Manager DATE : 20

CITY OF SANTA MONICA
DEPARTMENT OF PUBLIC WORKS

REVIEWED BY : DATE : 20

REVIEWED BY : DATE : 20

REVIEWED BY : DATE : 20

CITY CLIENT

NO.	DATE	BY	DESCRIPTION

REVISIONS

ISSUE
65% CONSTRUCTION DOCUMENTS / BID SET

DATE
01/23/2012

DRAWING NO. **6693**

SHEET OF SHEETS

SHEET TITLE
FLOOR PLAN

SHEET NO.
A2.10

SHEET OF

DWG NO. -

TITLE OF PROJECT

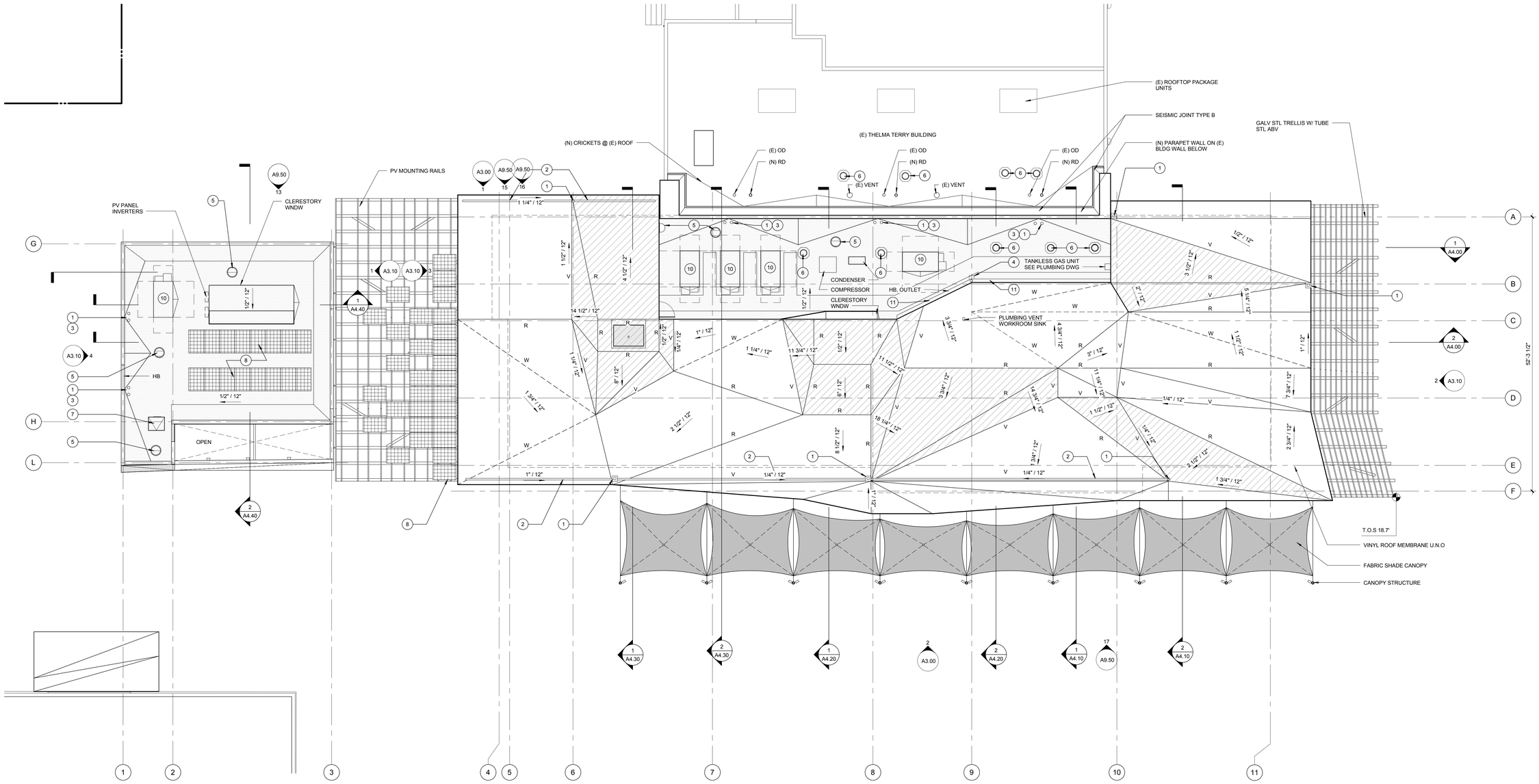

NOTE:
ARCHITECT WILL PROVIDE BIM MODEL TO CONTRACTOR FOR USE IN ESTABLISHING LOCATIONS & ELEVATIONS OF ROOF TRANSITIONS

PROJECT NORTH N

ROOF PLAN

0 2' 4' 8' | 1/8" = 1'-0" | 1

ROOF PLAN LEGEND

- R1 - WHITE
- R2 - LIGHT GRAY
- CALIFORNIA FRAMING ABV JOISTS. R2
- R — RIDGE
- V — VALLEY
- W — "RIDGE / VALLEY" IN WARPED ROOF SURFACE

SEE A9.10 FOR CORRESPONDING ROOF ASSEMBLIES

ROOF PLAN KEYNOTES

1. RECESSED ROOFDRAIN
2. RECESSED GUTTER
3. OVERFLOW
4. DOWN SPOUT W/ SPLASH BLOCK
5. EXHAUST FAN (SEE MECH DWG)
6. SOLAR TUBE
7. ROOF HATCH
8. PHOTOVOLTAIC PANEL
9. GALVANIZED STEEL TRELLIS
10. ROOFTOP HVAC PACKAGE UNIT EXACT LOCATION TBD. SEE MECH DWG
11. GUTTER

PICO BRANCH LIBRARY

2201 Pico Blvd.
Santa Monica, CA 90404

PROJECT

KoningEizenbergArchitecture
1454 25th St, Santa Monica, CA 90404
310.828.6131 info@kearch.com
310.828.0719 fax www.kearch.com

ARCHITECT'S PROJECT NO.
1001

ARCHITECT

All designs, ideas, arrangements and plans indicated by these drawings are the property and copyright of the Architect and shall neither be used on any other work nor be disclosed to any other person for any use whatsoever without written permission.

Koning Eizenberg Architecture and/or its principals and employees waives any and all liability or responsibility for problems that may occur when these plans, drawings, specifications, and/or designs are followed without the professional's guidance with ambiguities, or conflicts which are alleged.

CONSULTANT

City of Santa Monica Architecture Services
1437 4TH STREET, SUITE 300
SANTA MONICA, CA 90401
TEL. (310) 458-2205
FAX. (310) 399-1541
architecture@smgov.net

SUBMITTED BY : DATE : _____ 20 __

APPROVED BY : DATE : _____ 20 __
Miriam Mulder,
Architecture Services Manager

CITY OF SANTA MONICA
DEPARTMENT OF PUBLIC WORKS

REVIEWED BY : DATE : _____ 20 __

REVIEWED BY : DATE : _____ 20 __

REVIEWED BY : DATE : _____ 20 __

CITY CLIENT

NO.	DATE	BY	DESCRIPTION

REVISIONS

ISSUE
65% CONSTRUCTION DOCUMENTS / BID SET

DATE
01/23/2012

DRAWING NO. **6693**

SHEET OF SHEETS

SHEET TITLE
ROOF PLAN

SHEET NO.
A2.20

SHEET OF

DWG NO. -

TITLE OF PROJECT :

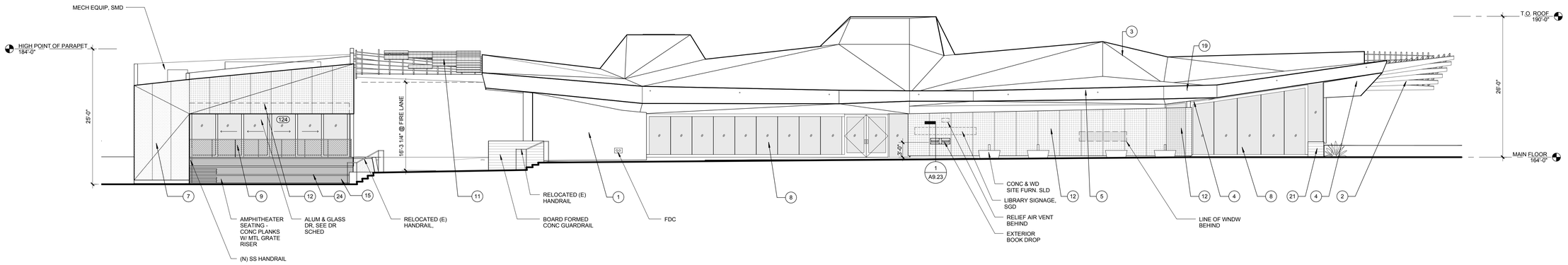

SOUTH CANOPY OMITTED FROM DRAWING FOR CLARITY. SEE DRAWING BELOW

SOUTH ELEVATION 0 2' 4' 8' 1/8" = 1'-0" **2**

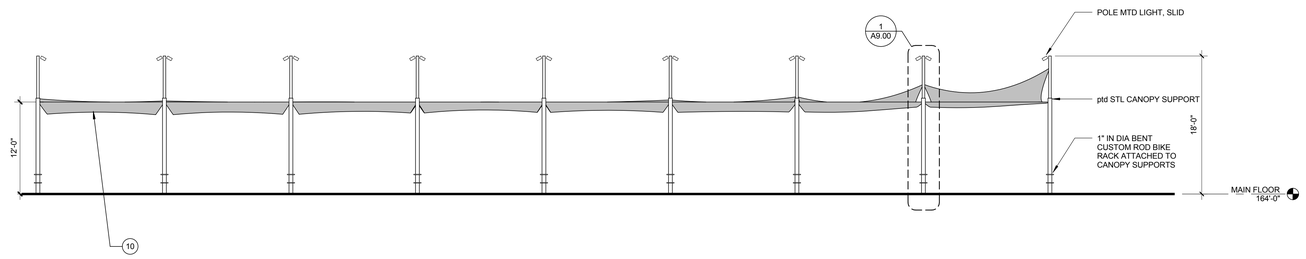

SOUTH CANOPY ELEVATION 0 2' 4' 8' 1/8" = 1'-0" **3**

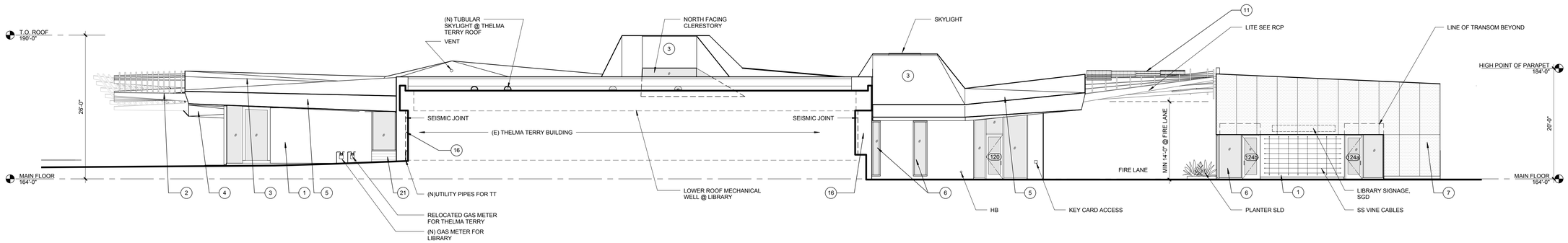

NORTH ELEVATION 0 2' 4' 8' 1/8" = 1'-0" **1**

MATERIAL KEYNOTES

1. SMOOTH STL TROWELLED CEMENT PLASTER, PAINTED WHITE W/ ANTI GRAFFITI COATING
2. GALV STL TRELLIS WITH GALVD STL TUBE SECTIONS ABV, SSD
3. THERMOPLASTIC MEMBRANE ROOFING, LIGHT GRAY OR WHITE, SEE ROOF PLAN
4. SMOOTH STL TROWELLED CEMENT SOFFIT TYP
5. THERMOPLASTIC MEMBRANE FASCIA TO MATCH ROOFING
6. EXTRUDED ALUMINUM GLAZING SYSTEM WITH LOW REFLECTIVITY GLASS, CLEAR ANONDIZED FINISH
7. DIMPLED MTL PANEL FROM CUSTOM DIE W/ KYNAR FACTORY FINISH, PATTERN TBD
8. BUTT-JOINT INSULATED GLASS IN ALUM FRAME, CLR ANNOD
9. METAL MESH GUARDRAIL
10. CUSTOM COLORED FIRE RETARDENT FABRIC CANOPY SUSP ON SS AIRCRAFT CABLE. FABRIC TO BE APPROVED BY FIRE DEPT
11. SOLAR PANELS WITH TRANSPARENT BACKSHEET ON GALV STL TRELLIS
12. PERF MTL PANEL W/ KYNAR FINISH, CUSTOM PATTERN TBD
13. NOT USED
14. NOT USED
15. ALUM GRATING
16. PTD SMOOTH STL TROWELLED CEMENT PLASTER TO MATCH (E) THELMA TERRY
17. SUSPENDED ACOUSTIC PLASTER SYSTEM
18. RECESSED LIGHT FIXTURE
19. SS EYE NUT TO CANOPY SUPPORT
20. RAISED ACCESS FLOOR OVER SLAB ON GRADE, SEE FINISH PLAN FOR FINISH INFO
21. BOARD FORMED CONCRETE WALL
22. HORIZONTAL BUTT JOINT
23. EXT GLASS SYSTEM IN CUSTOM STL FRAME, PTD
24. PRE-CAST CONC PLANKS

PICO BRANCH LIBRARY

2201 Pico Blvd.
Santa Monica, CA 90404

PROJECT

KoningEizenbergArchitecture
1454 25th St, Santa Monica, CA 90404

310.828.6131 info@kearch.com
310.828.0719 fax www.kearch.com

ARCHITECT'S PROJECT NO.
1001

ARCHITECT

All designs, ideas, arrangements and plans indicated by these drawings are the property and copyright of the Architect and shall neither be used on any other work nor be disclosed to any other person for any use whatsoever without written permission.

Koning Eizenberg Architecture and/or its principals and employees waives any and all liability or responsibility for problems that may occur when these plans, drawings, specifications, and/or designs are followed without the professional's guidance with ambiguities, or conflicts which are alleged.

CONSULTANT

City of Santa Monica Architecture Services

1437 4TH STREET, SUITE 300
SANTA MONICA, CA 90401
TEL. (310) 458-2205
FAX. (310) 399-1541
architecture@smgov.net

SUBMITTED BY : DATE : 20

APPROVED BY : Miriam Mulder, Architecture Services Manager DATE : 20

CITY OF SANTA MONICA
DEPARTMENT OF PUBLIC WORKS

REVIEWED BY : DATE : 20

REVIEWED BY : DATE : 20

REVIEWED BY : DATE : 20

CITY CLIENT

NO.	DATE	BY	DESCRIPTION

REVISIONS

ISSUE
65% CONSTRUCTION DOCUMENTS / BID SET

DATE
01/23/2012

DRAWING NO. **6693**

SHEET OF SHEETS

SHEET TITLE
EXTERIOR ELEVATIONS

SHEET NO.
A3.00

SHEET OF

DWG NO. -

TITLE OF PROJECT:

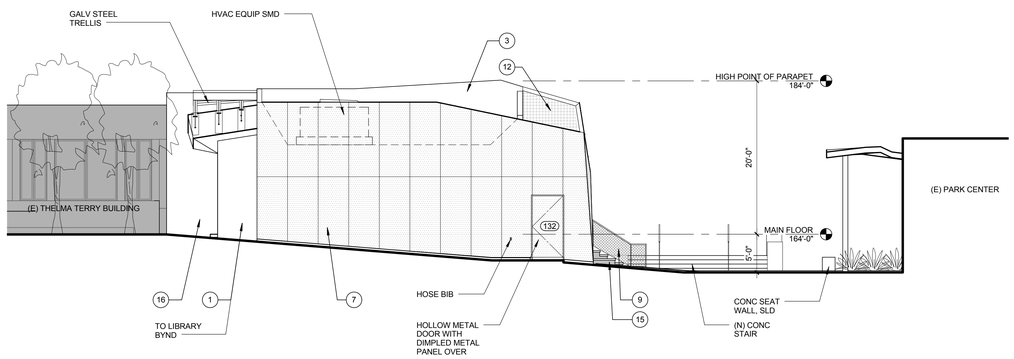

WEST ELEVATION COMMUNITY RM | 0 2' 4' 8' | 1/8" = 1'-0" | 4

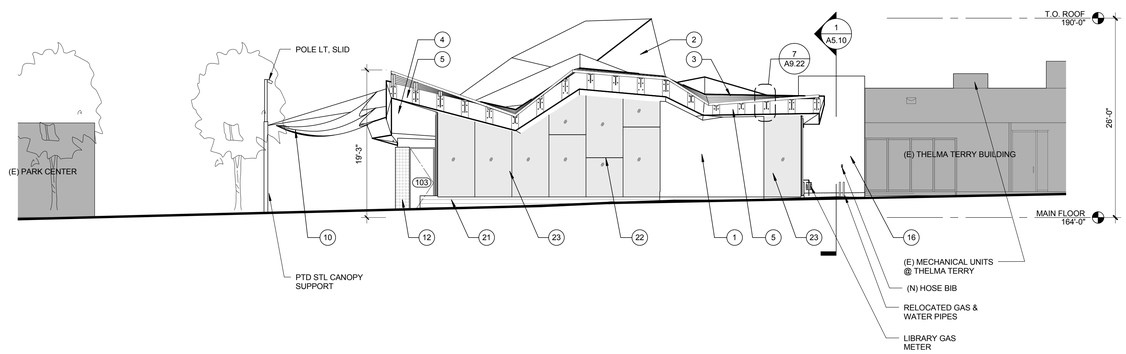

EAST ELEVATION LIBRARY | 0 2' 4' 8' | 1/8" = 1'-0" | 2

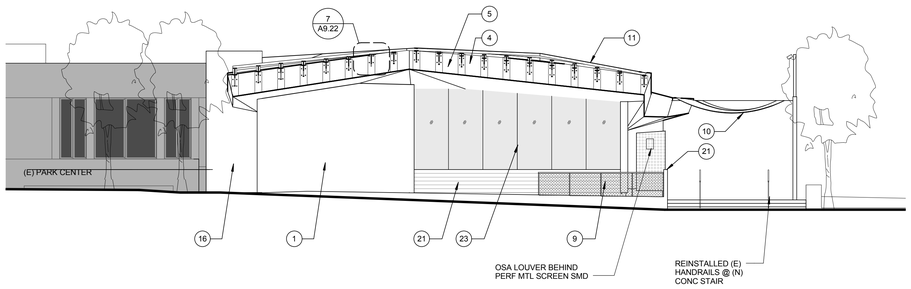

WEST ELEVATION LIBRARY (AT FIRELANE) | 0 2' 4' 8' | 1/8" = 1'-0" | 3

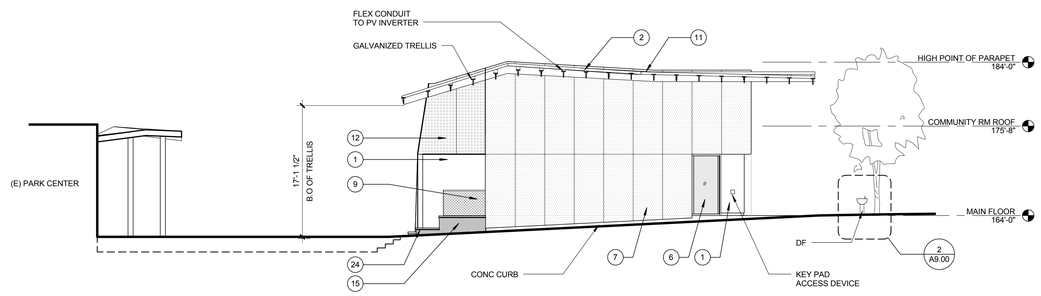

EAST ELEVATION COMMUNITY RM (AT FIRELANE) | 0 2' 4' 8' | 1/8" = 1'-0" | 1

MATERIAL KEYNOTES

1. SMOOTH STL TROWELLED CEMENT PLASTER, PAINTED WHITE W/ ANTI GRAFFITI COATING
2. GALV STL TRELLIS WITH GALVD STL TUBE SECTIONS ABV, SSD
3. THERMOPLASTIC MEMBRANE ROOFING, LIGHT GRAY OR WHITE, SEE ROOF PLAN
4. SMOOTH STL TROWELLED CEMENT SOFFIT TYP
5. THERMOPLASTIC MEMBRANE FASCIA TO MATCH ROOFING
6. EXTRUDED ALUMINUM GLAZING SYSTEM WITH LOW REFLECTIVITY GLASS, CLEAR ANONDIZED FINISH
7. DIMPLED MTL PANEL FROM CUSTOM DIE W/ KYNAR FACTORY FINISH, PATTERN TBD
8. BUTT-JOINT INSULATED GLASS IN ALUM FRAME, CLR ANNOD
9. METAL MESH GUARDRAIL
10. CUSTOM COLORED FIRE RETARDENT FABRIC CANOPY SUSP ON SS AIRCRAFT CABLE. FABRIC TO BE APPROVED BY FIRE DEPT
11. SOLAR PANELS WITH TRANSPARENT BACKSHEET ON GALV STL TRELLIS
12. PERF MTL PANEL W/ KYNAR FINISH, CUSTOM PATTERN TBD
13. NOT USED
14. NOT USED
15. ALUM GRATING
16. PTD SMOOTH STL TROWELLED CEMENT PLASTER TO MATCH (E) THELMA TERRY
17. SUSPENDED ACOUSTIC PLASTER SYSTEM
18. RECESSED LIGHT FIXTURE
19. SS EYE NUT TO CANOPY SUPPORT
20. RAISED ACCESS FLOOR OVER SLAB ON GRADE, SEE FINISH PLAN FOR FINISH INFO
21. BOARD FORMED CONCRETE WALL
22. HORIZONTAL BUTT JOINT
23. EXT GLASS SYSTEM IN CUSTOM STL FRAME, PTD
24. PRE-CAST CONC PLANKS

PICO BRANCH LIBRARY

2201 Pico Blvd.
Santa Monica, CA 90404

PROJECT

KoningEizenbergArchitecture
1454 25th St, Santa Monica, CA 90404

310.828.6131 info@kearch.com
310.828.0719 fax www.kearch.com

ARCHITECT'S PROJECT NO.
1001

ARCHITECT

All designs, ideas, arrangements and plans indicated by these drawings are the property and copyright of the Architect and shall neither be used on any other work nor be disclosed to any other person for any use whatsoever without written permission.

Koning Eizenberg Architecture and/or its principals and employees waives any and all liability or responsibility for problems that may occur when these plans, drawings, specifications, and/or designs are followed without the professional's guidance with ambiguities, or conflicts which are alleged.

CONSULTANT

City of Santa Monica
Architecture Services

1437 4TH STREET, SUITE 300
SANTA MONICA, CA 90401
TEL. (310) 458-2205
FAX. (310) 399-1541
architecture@smgov.net

SUBMITTED BY : DATE : 20

APPROVED BY : Miriam Mulder, Architecture Services Manager DATE : 20

CITY OF SANTA MONICA
DEPARTMENT OF PUBLIC WORKS

REVIEWED BY : DATE : 20

REVIEWED BY : DATE : 20

REVIEWED BY : DATE : 20

CITY CLIENT

NO.	DATE	BY	DESCRIPTION

REVISIONS

ISSUE
65% CONSTRUCTION DOCUMENTS / BID SET

DATE
01/23/2012

DRAWING NO. **6693**

SHEET OF SHEETS

SHEET TITLE
EXTERIOR ELEVATIONS

SHEET NO.
A3.10

SHEET OF

DWG. NO. -

TITLE OF PROJECT:

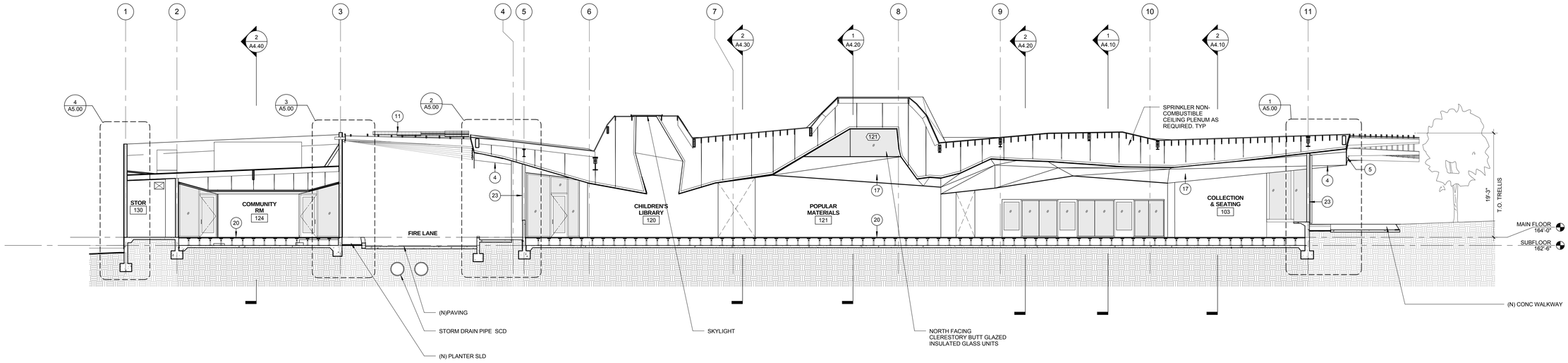

LIBRARY EAST/ WEST SECTION 0 1' 2' 4' 1/8" = 1'-0" **2**

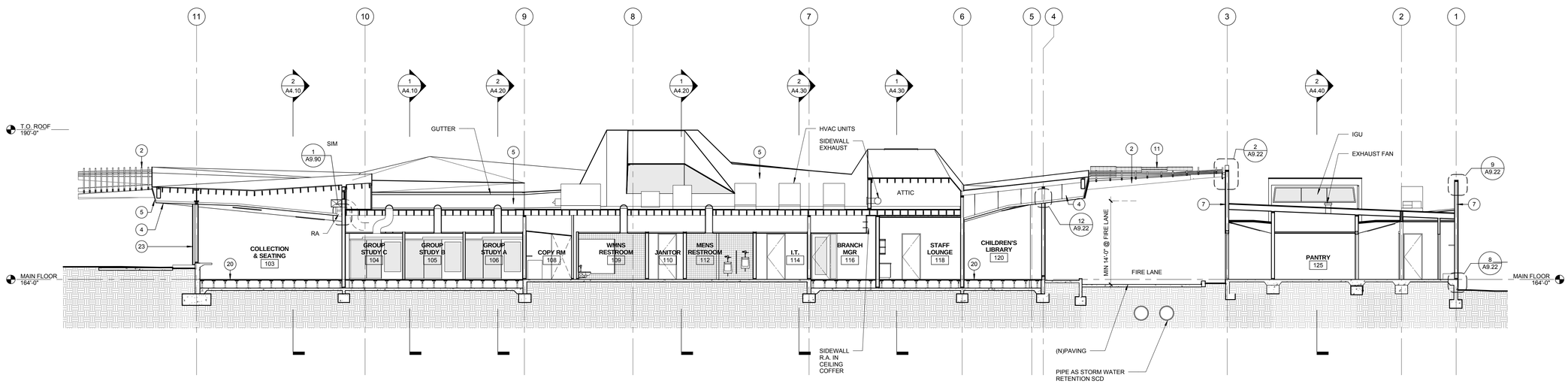

LIBRARY EAST/ WEST SECTION 2 0 1' 2' 4' 1/8" = 1'-0" **1**

MATERIAL KEYNOTES

1. SMOOTH STL TROWELLED CEMENT PLASTER, PAINTED WHITE W/ ANTI GRAFFITI COATING
2. GALV STL TRELLIS WITH GALVD STL TUBE SECTIONS ABV, SSD
3. THERMOPLASTIC MEMBRANE ROOFING, LIGHT GRAY OR WHITE, SEE ROOF PLAN
4. SMOOTH STL TROWELLED CEMENT SOFFIT TYP
5. THERMOPLASTIC MEMBRANE FASCIA TO MATCH ROOFING
6. EXTRUDED ALUMINUM GLAZING SYSTEM WITH LOW REFLECTIVITY GLASS, CLEAR ANONDIZED FINISH
7. DIMPLED MTL PANEL FROM CUSTOM DIE W/ KYNAR FACTORY FINISH, PATTERN TBD
8. BUTT-JOINT INSULATED GLASS IN ALUM FRAME, CLR ANNOD
9. METAL MESH GUARDRAIL
10. CUSTOM COLORED FIRE RETARDENT FABRIC CANOPY SUSP ON SS AIRCRAFT CABLE. FABRIC TO BE APPROVED BY FIRE DEPT
11. SOLAR PANELS WITH TRANSPARENT BACKSHEET ON GALV STL TRELLIS
12. PERF MTL PANEL W/ KYNAR FINISH, CUSTOM PATTERN TBD
13. NOT USED
14. NOT USED
15. ALUM GRATING
16. PTD SMOOTH STL TROWELLED CEMENT PLASTER TO MATCH (E) THELMA TERRY
17. SUSPENDED ACOUSTIC PLASTER SYSTEM
18. RECESSED LIGHT FIXTURE
19. SS EYE NUT TO CANOPY SUPPORT
20. RAISED ACCESS FLOOR OVER SLAB ON GRADE, SEE FINISH PLAN FOR FINISH INFO
21. BOARD FORMED CONCRETE WALL
22. HORIZONTAL BUTT JOINT
23. EXT GLASS SYSTEM IN CUSTOM STL FRAME, PTD
24. PRE-CAST CONC PLANKS

PICO BRANCH LIBRARY

2201 Pico Blvd.
Santa Monica, CA 90404

PROJECT

KoningEizenbergArchitecture
1454 25th St, Santa Monica, CA 90404

310.828.6131 info@kearch.com
310.828.0719 fax www.kearch.com

ARCHITECT'S PROJECT NO.
1001

ARCHITECT

All designs, ideas, arrangements and plans indicated by these drawings are the property and copyright of the Architect and shall neither be used on any other work nor be disclosed to any other person for any use whatsoever without written permission.

Koning Eizenberg Architecture and/or its principals and employees waives any and all liability or responsibility for problems that may occur when these plans, drawings, specifications, and/or designs are followed without the professional's guidance with ambiguities, or conflicts which are alleged.

CONSULTANT

City of Santa Monica Architecture Services
1437 4TH STREET, SUITE 300
SANTA MONICA, CA 90401
TEL. (310) 458-2205
FAX. (310) 399-1541
architecture@smgov.net

SUBMITTED BY : DATE : 20

APPROVED BY : Miriam Mulder, Architecture Services Manager DATE : 20

CITY OF SANTA MONICA
DEPARTMENT OF PUBLIC WORKS

REVIEWED BY : DATE : 20

REVIEWED BY : DATE : 20

REVIEWED BY : DATE : 20

CITY CLIENT

NO.	DATE	BY	DESCRIPTION

REVISIONS

ISSUE
65% CONSTRUCTION DOCUMENTS / BID SET

DATE
01/23/2012

DRAWING NO. **6693**

SHEET OF SHEETS

SHEET TITLE
BUILDING SECTIONS

SHEET NO.
A4.00

SHEET OF

DWG NO. -

TITLE OF PROJECT :

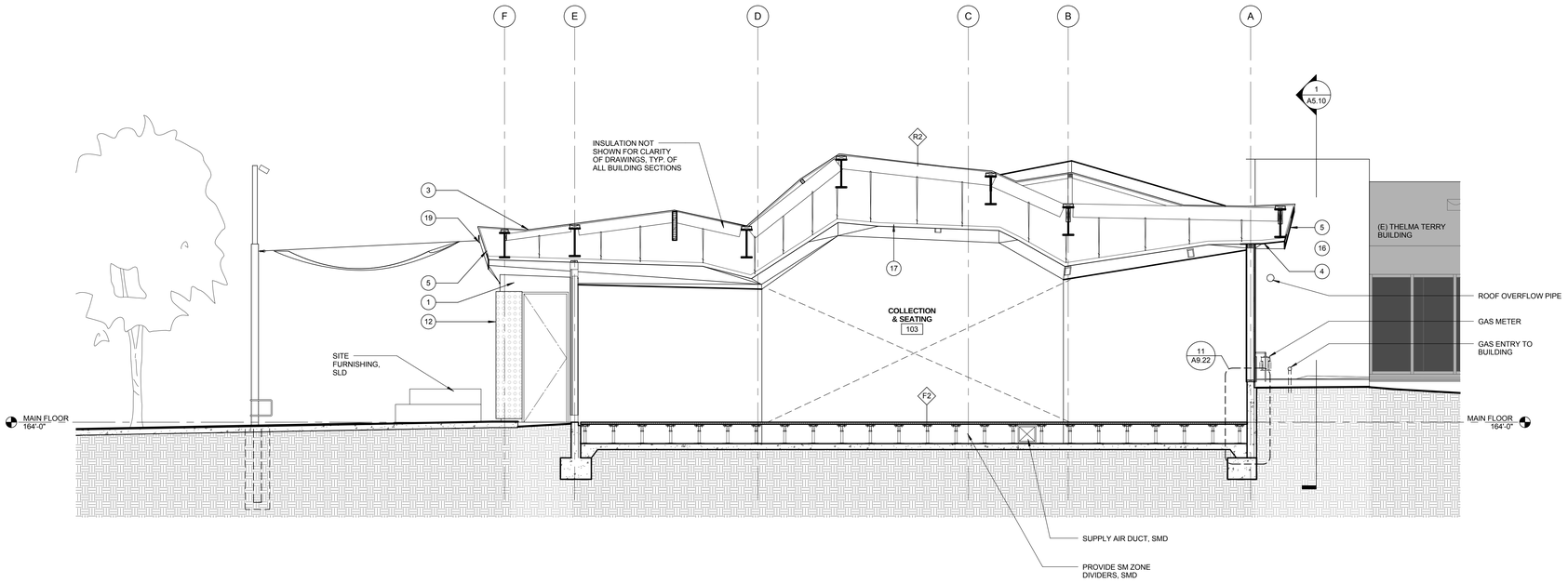

NORTH / SOUTH SECTION 1 | 0 1' 2' 4' | 1/4" = 1'-0" | 2

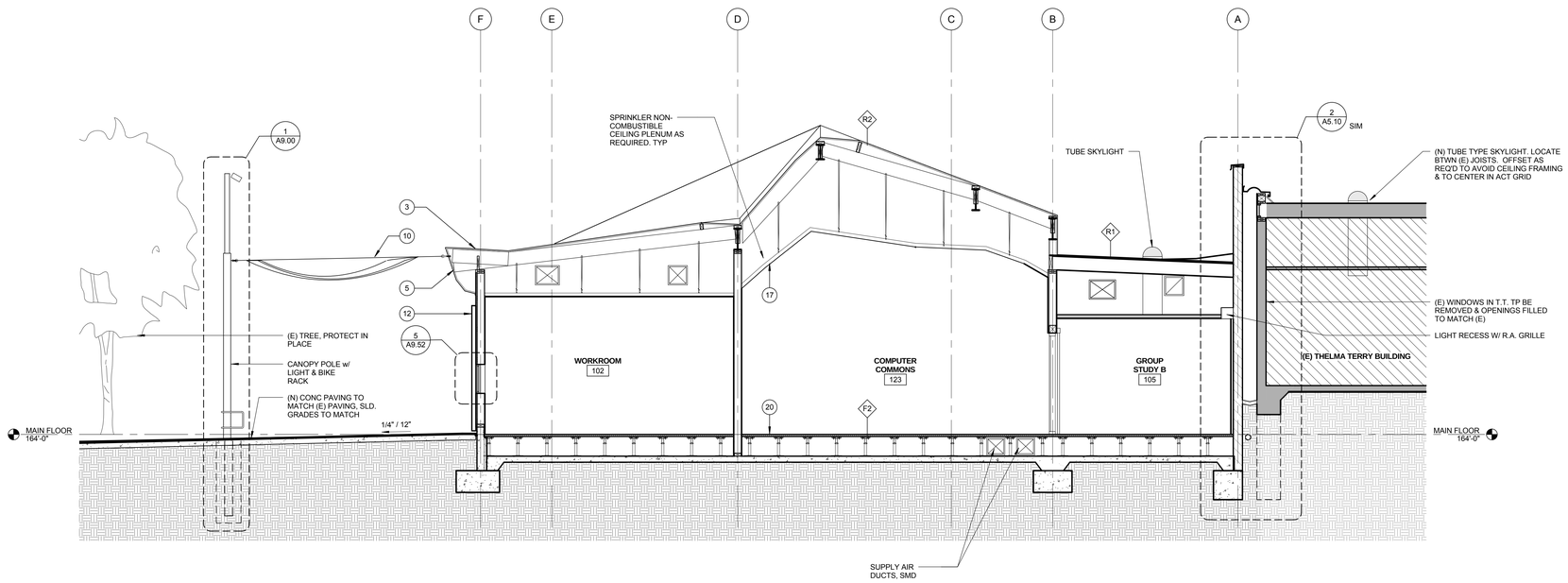

NORTH / SOUTH SECTION 2 | 0 1' 2' 4' | 1/4" = 1'-0" | 1

MATERIAL KEYNOTES

1. SMOOTH STL TROWELLED CEMENT PLASTER, PAINTED WHITE W/ ANTI GRAFFITI COATING
2. GALV STL TRELLIS WITH GALVD STL TUBE SECTIONS ABV, SSD
3. THERMOPLASTIC MEMBRANE ROOFING, LIGHT GRAY OR WHITE, SEE ROOF PLAN
4. SMOOTH STL TROWELLED CEMENT SOFFIT TYP
5. THERMOPLASTIC MEMBRANE FASCIA TO MATCH ROOFING
6. EXTRUDED ALUMINUM GLAZING SYSTEM WITH LOW REFLECTIVITY GLASS, CLEAR ANONDIZED FINISH
7. DIMPLED MTL PANEL FROM CUSTOM DIE W/ KYNAR FACTORY FINISH, PATTERN TBD
8. BUTT-JOINT INSULATED GLASS IN ALUM FRAME, CLR ANNOD
9. METAL MESH GUARDRAIL
10. CUSTOM COLORED FIRE RETARDENT FABRIC CANOPY SUSP ON SS AIRCRAFT CABLE. FABRIC TO BE APPROVED BY FIRE DEPT
11. SOLAR PANELS WITH TRANSPARENT BACKSHEET ON GALV STL TRELLIS
12. PERF MTL PANEL W/ KYNAR FINISH, CUSTOM PATTERN TBD
13. NOT USED
14. NOT USED
15. ALUM GRATING
16. PTD SMOOTH STL TROWELLED CEMENT PLASTER TO MATCH (E) THELMA TERRY
17. SUSPENDED ACOUSTIC PLASTER SYSTEM
18. RECESSED LIGHT FIXTURE
19. SS EYE NUT TO CANOPY SUPPORT
20. RAISED ACCESS FLOOR OVER SLAB ON GRADE, SEE FINISH PLAN FOR FINISH INFO
21. BOARD FORMED CONCRETE WALL
22. HORIZONTAL BUTT JOINT
23. EXT GLASS SYSTEM IN CUSTOM STL FRAME, PTD
24. PRE-CAST CONC PLANKS

PICO BRANCH LIBRARY

2201 Pico Blvd.
Santa Monica, CA 90404

PROJECT

KoningEizenbergArchitecture
1454 25th St, Santa Monica, CA 90404
310.828.6131 info@kearch.com
310.828.0719 fax www.kearch.com

ARCHITECT'S PROJECT NO.
1001

ARCHITECT

All designs, ideas, arrangements and plans indicated by these drawings are the property and copyright of the Architect and shall neither be used on any other work nor be disclosed to any other person for any use whatsoever without written permission.

Koning Eizenberg Architecture and/or its principals and employees waives any and all liability or responsibility for problems that may occur when these plans, drawings, specifications, and/or designs are followed without the professional's guidance with ambiguities, or conflicts which are alleged.

CONSULTANT

City of Santa Monica Architecture Services
1437 4TH STREET, SUITE 300
SANTA MONICA, CA 90401
TEL. (310) 458-2205
FAX. (310) 399-1541
architecture@smgov.net

SUBMITTED BY : DATE : 20

APPROVED BY : DATE : 20
Miriam Mulder,
Architecture Services Manager

CITY OF SANTA MONICA
DEPARTMENT OF PUBLIC WORKS

REVIEWED BY : DATE : 20

REVIEWED BY : DATE : 20

REVIEWED BY : DATE : 20

CITY CLIENT

NO.	DATE	BY	DESCRIPTION

REVISIONS

ISSUE
65% CONSTRUCTION DOCUMENTS / BID SET

DATE
01/23/2012

DRAWING NO. **6693**

SHEET OF SHEETS

SHEET TITLE
BUILDING SECTIONS

SHEET NO.
A4.10

SHEET OF

DWG NO. -

TITLE OF PROJECT:

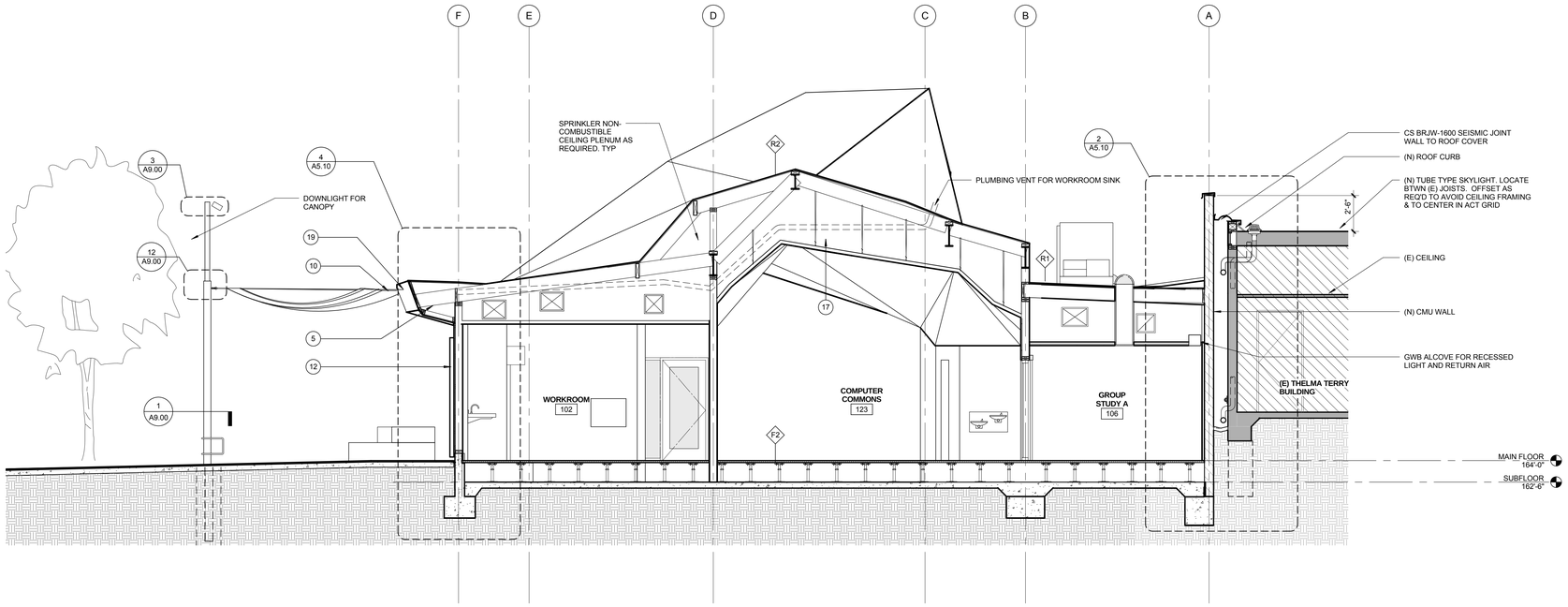

NORTH / SOUTH SECTION 3

0 2' 4' 8' | 1/4" = 1'-0" | 2

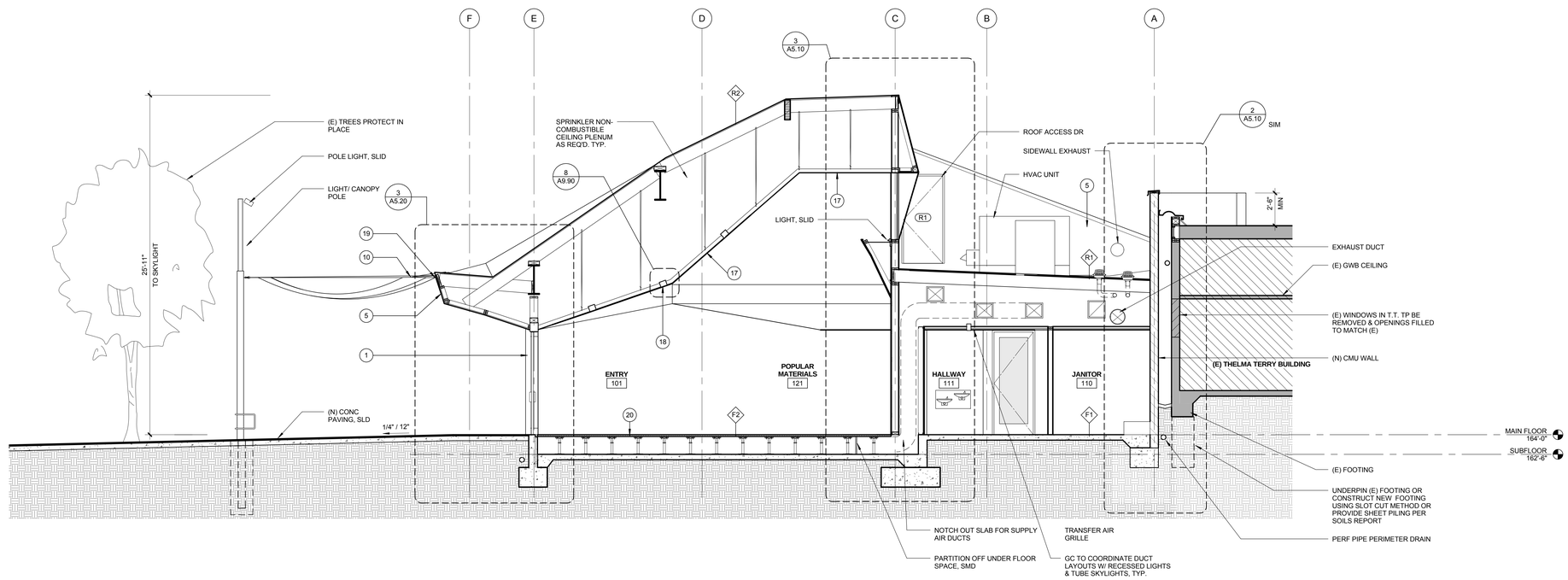

NORTH / SOUTH SECTION 4

0 2' 4' 8' | 1/4" = 1'-0" | 1

MATERIAL KEY NOTES

1. SMOOTH STL TROWELLED CEMENT PLASTER, PAINTED WHITE W/ ANTI GRAFFITI COATING
2. GALV STL TRELLIS WITH GALVD STL TUBE SECTIONS ABV, SSD
3. THERMOPLASTIC MEMBRANE ROOFING, LIGHT GRAY OR WHITE, SEE ROOF PLAN
4. SMOOTH STL TROWELLED CEMENT SOFFIT TYP
5. THERMOPLASTIC MEMBRANE FASCIA TO MATCH ROOFING
6. EXTRUDED ALUMINUM GLAZING SYSTEM WITH LOW REFLECTIVITY GLASS, CLEAR ANONDIZED FINISH
7. DIMPLED MTL PANEL FROM CUSTOM DIE W/ KYNAR FACTORY FINISH, PATTERN TBD
8. BUTT-JOINT INSULATED GLASS IN ALUM FRAME, CLR ANNOD
9. METAL MESH GUARDRAIL
10. CUSTOM COLORED FIRE RETARDENT FABRIC CANOPY SUSP ON SS AIRCRAFT CABLE. FABRIC TO BE APPROVED BY FIRE DEPT
11. SOLAR PANELS WITH TRANSPARENT BACKSHEET ON GALV STL TRELLIS
12. PERF MTL PANEL W/ KYNAR FINISH, CUSTOM PATTERN TBD
13. NOT USED
14. NOT USED
15. ALUM GRATING
16. PTD SMOOTH STL TROWELLED CEMENT PLASTER TO MATCH (E) THELMA TERRY
17. SUSPENDED ACOUSTIC PLASTER SYSTEM
18. RECESSED LIGHT FIXTURE
19. SS EYE NUT TO CANOPY SUPPORT
20. RAISED ACCESS FLOOR OVER SLAB ON GRADE, SEE FINISH PLAN FOR FINISH INFO
21. BOARD FORMED CONCRETE WALL
22. HORIZONTAL BUTT JOINT
23. EXT GLASS SYSTEM IN CUSTOM STL FRAME, PTD
24. PRE-CAST CONC PLANKS

PICO BRANCH LIBRARY

2201 Pico Blvd.
Santa Monica, CA 90404

PROJECT

KoningEizenbergArchitecture
1454 25th St, Santa Monica, CA 90404

310.828.6131 info@kearch.com
310.828.0719 fax www.kearch.com

ARCHITECT'S PROJECT NO.
1001

ARCHITECT

All designs, ideas, arrangements and plans indicated by these drawings are the property and copyright of the Architect and shall neither be used on any other work nor be disclosed to any other person for any use whatsoever without written permission.

Koning Eizenberg Architecture and/or its principals and employees waives any and all liability or responsibility for problems that may occur when these plans, drawings, specifications, and/or designs are followed without the professional's guidance with ambiguities, or conflicts which are alleged.

CONSULTANT

City of Santa Monica Architecture Services

1437 4TH STREET, SUITE 300
SANTA MONICA, CA 90401
TEL. (310) 458-2205
FAX. (310) 399-1541
architecture@smgov.net

SUBMITTED BY : DATE : 20

APPROVED BY : DATE : 20
Miriam Mulder,
Architecture Services Manager

CITY OF SANTA MONICA
DEPARTMENT OF PUBLIC WORKS

REVIEWED BY : DATE : 20

REVIEWED BY : DATE : 20

REVIEWED BY : DATE : 20

CITY CLIENT

NO.	DATE	BY	DESCRIPTION

REVISIONS

ISSUE
65% CONSTRUCTION DOCUMENTS / BID SET

DATE
01/23/2012

DRAWING NO. **6693**

SHEET OF SHEETS

SHEET TITLE
BUILDING SECTIONS

SHEET NO.
A4.20

SHEET OF

DWG NO. - -

TITLE OF PROJECT :

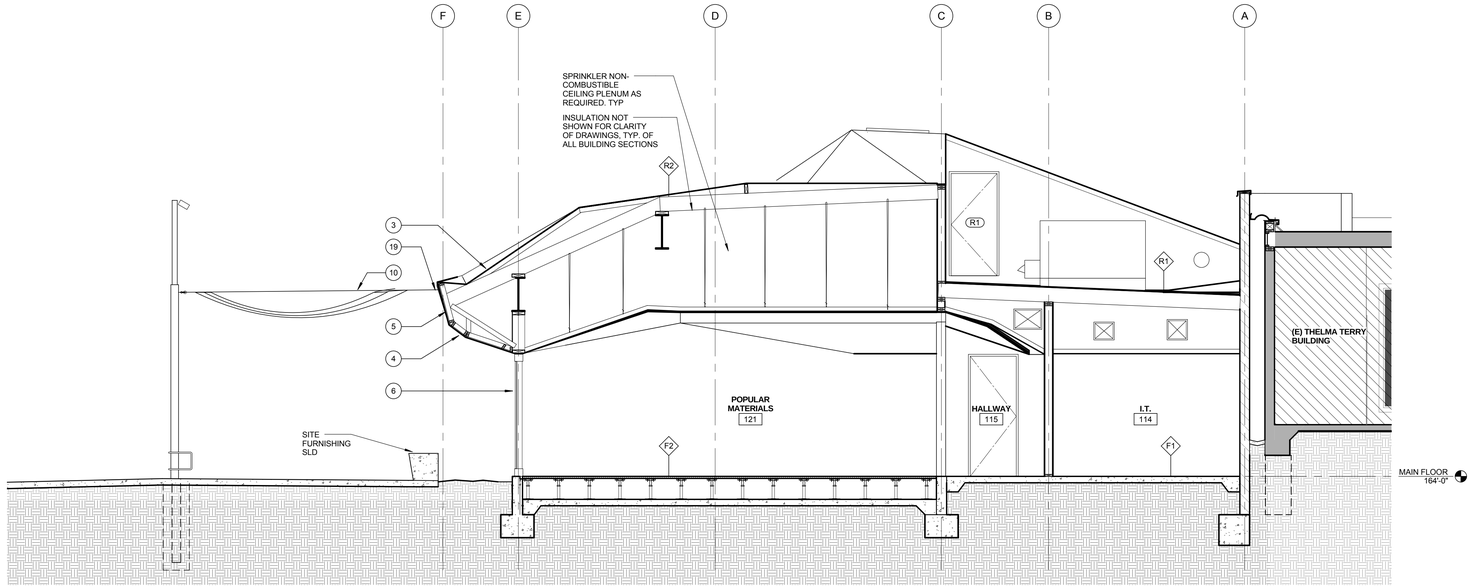

NORTH / SOUTH SECTION 5

0 1' 2' 4' | 1/4" = 1'-0" | 2

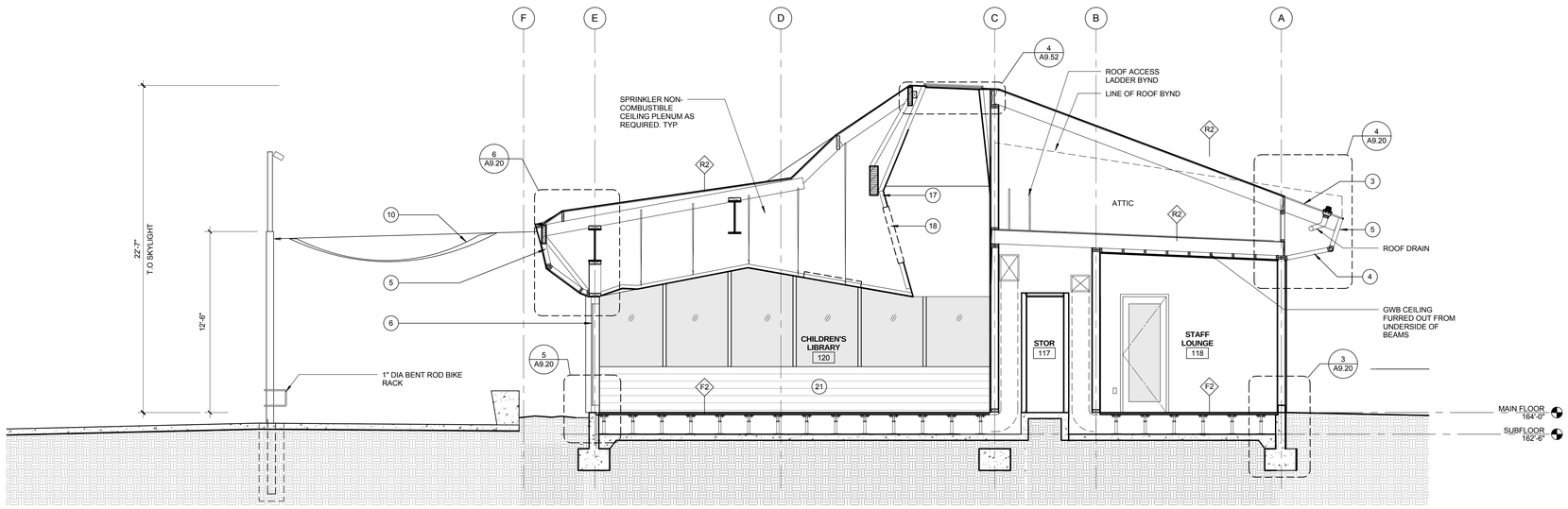

NORTH / SOUTH SECTION 6

0 1' 2' 4' | 1/4" = 1'-0" | 1

MATERIAL KEYNOTES

1. SMOOTH STL TROWELLED CEMENT PLASTER, PAINTED WHITE W/ ANTI GRAFFITI COATING
2. GALV STL TRELLIS WITH GALVD STL TUBE SECTIONS ABV, SSD
3. THERMOPLASTIC MEMBRANE ROOFING, LIGHT GRAY OR WHITE, SEE ROOF PLAN
4. SMOOTH STL TROWELLED CEMENT SOFFIT TYP
5. THERMOPLASTIC MEMBRANE FASCIA TO MATCH ROOFING
6. EXTRUDED ALUMINUM GLAZING SYSTEM WITH LOW REFLECTIVITY GLASS, CLEAR ANONDIZED FINISH
7. DIMPLED MTL PANEL FROM CUSTOM DIE W/ KYNAR FACTORY FINISH, PATTERN TBD
8. BUTT-JOINT INSULATED GLASS IN ALUM FRAME, CLR ANNOD
9. METAL MESH GUARDRAIL
10. CUSTOM COLORED FIRE RETARDENT FABRIC CANOPY SUSP ON SS AIRCRAFT CABLE. FABRIC TO BE APPROVED BY FIRE DEPT
11. SOLAR PANELS WITH TRANSPARENT BACKSHEET ON GALV STL TRELLIS
12. PERF MTL PANEL W/ KYNAR FINISH, CUSTOM PATTERN TBD
13. NOT USED
14. NOT USED
15. ALUM GRATING
16. PTD SMOOTH STL TROWELLED CEMENT PLASTER TO MATCH (E) THELMA TERRY
17. SUSPENDED ACOUSTIC PLASTER SYSTEM
18. RECESSED LIGHT FIXTURE
19. SS EYE NUT TO CANOPY SUPPORT
20. RAISED ACCESS FLOOR OVER SLAB ON GRADE, SEE FINISH PLAN FOR FINISH INFO
21. BOARD FORMED CONCRETE WALL
22. HORIZONTAL BUTT JOINT
23. EXT GLASS SYSTEM IN CUSTOM STL FRAME, PTD
24. PRE-CAST CONC PLANKS

PICO BRANCH LIBRARY

2201 Pico Blvd.
Santa Monica, CA 90404

PROJECT

KoningEizenbergArchitecture
1454 25th St, Santa Monica, CA 90404

310.828.6131 info@kearch.com
310.828.0719 fax www.kearch.com

ARCHITECT'S PROJECT NO.
1001

ARCHITECT

All designs, ideas, arrangements and plans indicated by these drawings are the property and copyright of the Architect and shall neither be used on any other work nor be disclosed to any other person for any use whatsoever without written permission.

Koning Eizenberg Architecture and/or its principals and employees waives any and all liability or responsibility for problems that may occur when these plans, drawings, specifications, and/or designs are followed without the professional's guidance with ambiguities, or conflicts which are alleged.

CONSULTANT

City of Santa Monica Architecture Services
1437 4TH STREET, SUITE 300
SANTA MONICA, CA 90401
TEL. (310) 458-2205
FAX. (310) 399-1541
architecture@smgov.net

DATE : 20
SUBMITTED BY :

DATE : 20
APPROVED BY :
Miriam Mulder,
Architecture Services Manager

CITY OF SANTA MONICA
DEPARTMENT OF PUBLIC WORKS

REVIEWED BY : DATE : 20

REVIEWED BY : DATE : 20

REVIEWED BY : DATE : 20

CITY CLIENT

NO.	DATE	BY	DESCRIPTION

REVISIONS

ISSUE
65% CONSTRUCTION DOCUMENTS / BID SET

DATE
01/23/2012

DRAWING NO. **6693**

SHEET OF SHEETS

SHEET TITLE
BUILDING SECTIONS

SHEET NO.
A4.30

SHEET OF

DWG NO. -

TITLE OF PROJECT

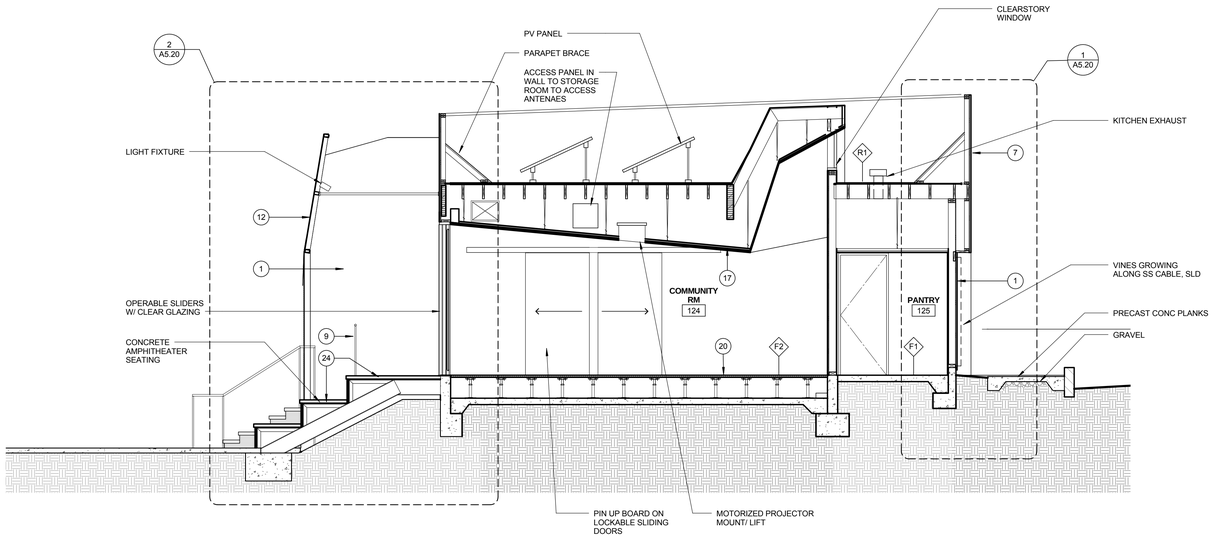

COMMUNITY RM NORTH / SOUTH SECTION 0 1' 2' 4' 1/4" = 1'-0" **2**

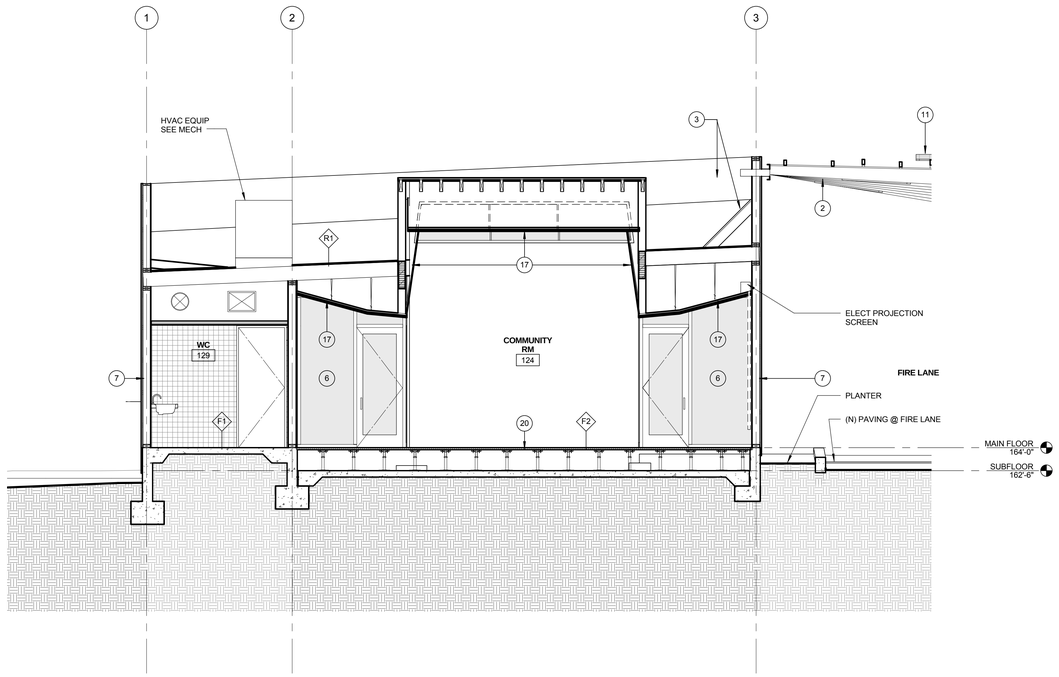

COMMUNITY RM EAST / WEST SECTION 0 1' 2' 4' 1/4" = 1'-0" **1**

MATERIAL KEYNOTES

1. SMOOTH STL TROWELLED CEMENT PLASTER, PAINTED WHITE W/ ANTI GRAFFITI COATING
2. GALV STL TRELLIS WITH GALVD STL TUBE SECTIONS ABV, SSD
3. THERMOPLASTIC MEMBRANE ROOFING, LIGHT GRAY OR WHITE, SEE ROOF PLAN
4. SMOOTH STL TROWELLED CEMENT SOFFIT TYP
5. THERMOPLASTIC MEMBRANE FASCIA TO MATCH ROOFING
6. EXTRUDED ALUMINUM GLAZING SYSTEM WITH LOW REFLECTIVITY GLASS, CLEAR ANONDIZED FINISH
7. DIMPLED MTL PANEL FROM CUSTOM DIE W/ KYNAR FACTORY FINISH, PATTERN TBD
8. BUTT-JOINT INSULATED GLASS IN ALUM FRAME, CLR ANNOD
9. METAL MESH GUARDRAIL
10. CUSTOM COLORED FIRE RETARDENT FABRIC CANOPY SUSP ON SS AIRCRAFT CABLE. FABRIC TO BE APPROVED BY FIRE DEPT
11. SOLAR PANELS WITH TRANSPARENT BACKSHEET ON GALV STL TRELLIS
12. PERF MTL PANEL W/ KYNAR FINISH, CUSTOM PATTERN TBD
13. NOT USED
14. NOT USED
15. ALUM GRATING
16. PTD SMOOTH STL TROWELLED CEMENT PLASTER TO MATCH (E) THELMA TERRY
17. SUSPENDED ACOUSTIC PLASTER SYSTEM
18. RECESSED LIGHT FIXTURE
19. SS EYE NUT TO CANOPY SUPPORT
20. RAISED ACCESS FLOOR OVER SLAB ON GRADE, SEE FINISH PLAN FOR FINISH INFO
21. BOARD FORMED CONCRETE WALL
22. HORIZONTAL BUTT JOINT
23. EXT GLASS SYSTEM IN CUSTOM STL FRAME, PTD
24. PRE-CAST CONC PLANKS

PICO BRANCH LIBRARY

2201 Pico Blvd.
Santa Monica, CA 90404

PROJECT

KoningEizenbergArchitecture
1454 25th St, Santa Monica, CA 90404

310.828.6131 info@kearch.com
310.828.0719 fax www.kearch.com

ARCHITECT'S PROJECT NO.
1001

ARCHITECT

All designs, ideas, arrangements and plans indicated by these drawings are the property and copyright of the Architect and shall neither be used on any other work nor be disclosed to any other person for any use whatsoever without written permission.

Koning Eizenberg Architecture and/or its principals and employees waives any and all liability or responsibility for problems that may occur when these plans, drawings, specifications, and/or designs are followed without the professional's guidance with ambiguities, or conflicts which are alleged.

CONSULTANT

City of Santa Monica
Architecture Services

1437 4TH STREET, SUITE 300
SANTA MONICA, CA 90401
TEL. (310) 458-2205
FAX. (310) 399-1541
architecture@smgov.net

DATE : _____ 20 __
SUBMITTED BY :

DATE : _____ 20 __
APPROVED BY :
Miriam Mulder,
Architecture Services Manager

CITY OF SANTA MONICA
DEPARTMENT OF PUBLIC WORKS

REVIEWED BY : DATE : _____ 20 __

REVIEWED BY : DATE : _____ 20 __

REVIEWED BY : DATE : _____ 20 __

CITY CLIENT

NO.	DATE	BY	DESCRIPTION

REVISIONS

ISSUE
65% CONSTRUCTION DOCUMENTS / BID SET

DATE
01/23/2012

DRAWING NO. **6693**

SHEET OF SHEETS

SHEET TITLE
BUILDING SECTIONS

SHEET NO.
A4.40

SHEET OF

DWG. NO. -

TITLE OF PROJECT :

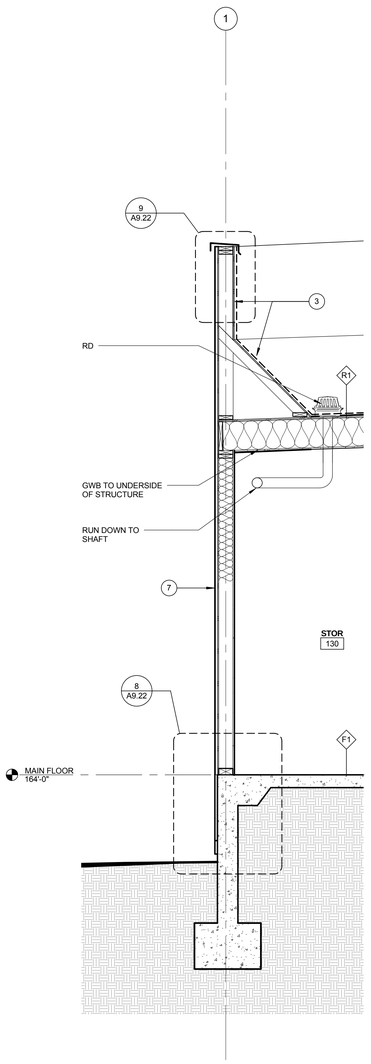

WALL SECTION @ WEST COMMUNITY RM | 0 6" 1' 2' | 1/2" = 1'-0" | **4**

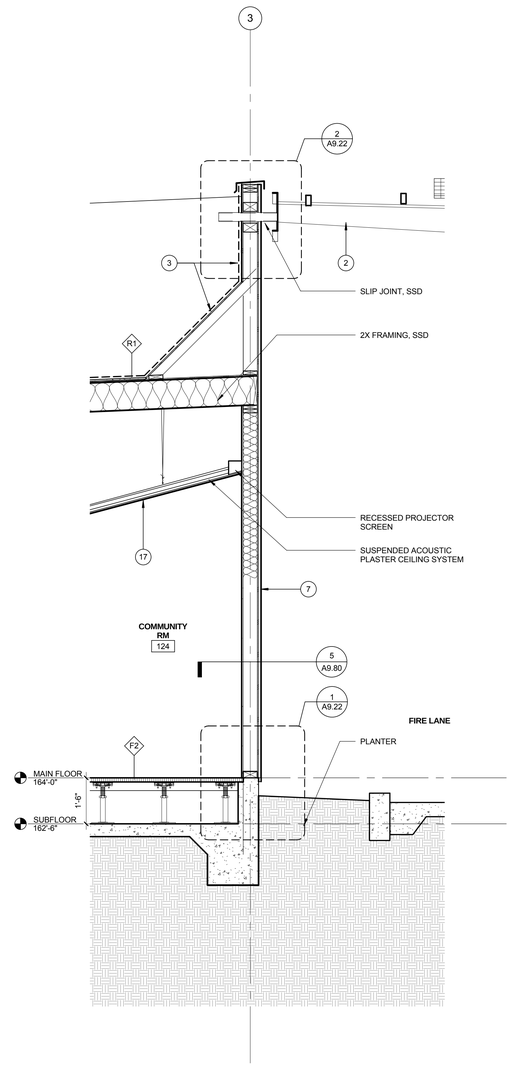

WALL SECTION @ EAST COMMUNITY RM | 0 6" 1' 2' | 1/2" = 1'-0" | **3**

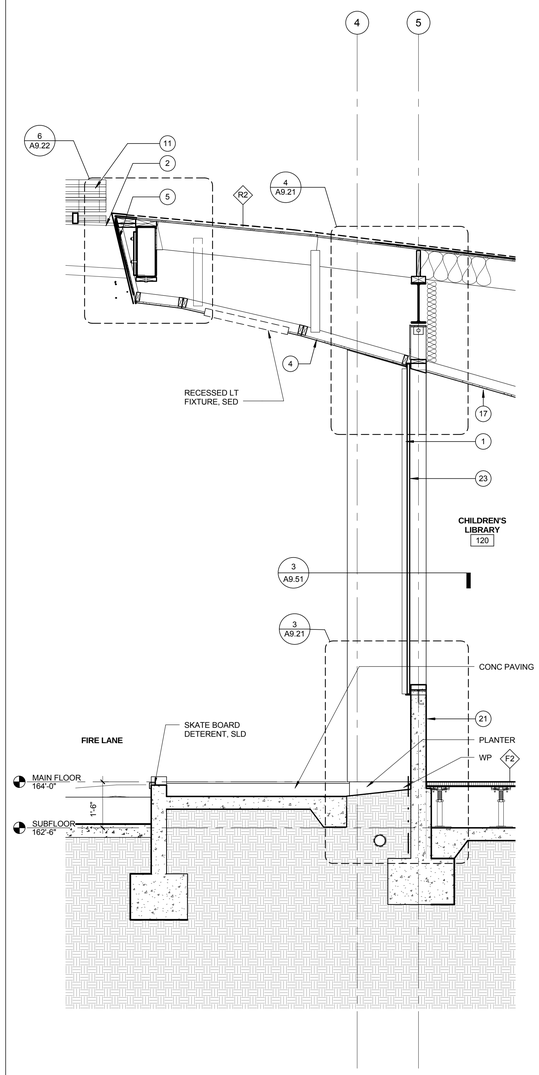

WALL SECTION @ WEST LIBRARY | 0 6" 1' 2' | 1/2" = 1'-0" | **2**

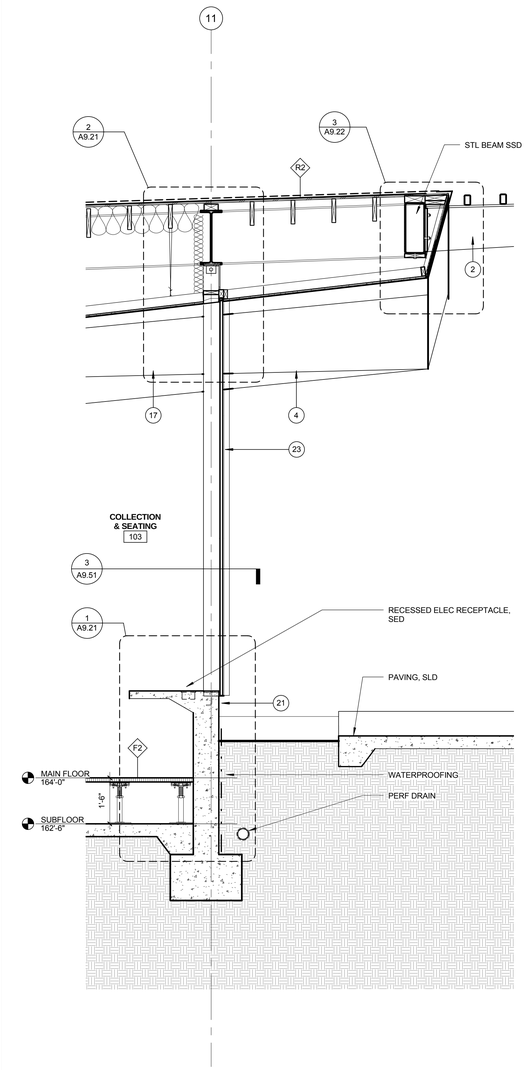

WALL SECTION @ EAST LIBRARY | 0 6" 1' 2' | 1/2" = 1'-0" | **1**

MATERIAL KEYNOTES

1. SMOOTH STL TROWELLED CEMENT PLASTER, PAINTED WHITE W/ ANTI GRAFFITI COATING
2. GALV STL TRELLIS WITH GALVD STL TUBE SECTIONS ABV, SSD
3. THERMOPLASTIC MEMBRANE ROOFING, LIGHT GRAY OR WHITE, SEE ROOF PLAN
4. SMOOTH STL TROWELLED CEMENT SOFFIT TYP
5. THERMOPLASTIC MEMBRANE FASCIA TO MATCH ROOFING
6. EXTRUDED ALUMINUM GLAZING SYSTEM WITH LOW REFLECTIVITY GLASS, CLEAR ANONDIZED FINISH
7. DIMPLED MTL PANEL FROM CUSTOM DIE W/ KYNAR FACTORY FINISH, PATTERN TBD
8. BUTT-JOINT INSULATED GLASS IN ALUM FRAME, CLR ANNOD
9. METAL MESH GUARDRAIL
10. CUSTOM COLORED FIRE RETARDENT FABRIC CANOPY SUSP ON SS AIRCRAFT CABLE. FABRIC TO BE APPROVED BY FIRE DEPT
11. SOLAR PANELS WITH TRANSPARENT BACKSHEET ON GALV STL TRELLIS
12. PERF MTL PANEL W/ KYNAR FINISH, CUSTOM PATTERN TBD
13. NOT USED
14. NOT USED
15. ALUM GRATING
16. PTD SMOOTH STL TROWELLED CEMENT PLASTER TO MATCH (E) THELMA TERRY
17. SUSPENDED ACOUSTIC PLASTER SYSTEM
18. RECESSED LIGHT FIXTURE
19. SS EYE NUT TO CANOPY SUPPORT
20. RAISED ACCESS FLOOR OVER SLAB ON GRADE, SEE FINISH PLAN FOR FINISH INFO
21. BOARD FORMED CONCRETE WALL
22. HORIZONTAL BUTT JOINT
23. EXT GLASS SYSTEM IN CUSTOM STL FRAME, PTD
24. PRE-CAST CONC PLANKS

PICO BRANCH LIBRARY

2201 Pico Blvd.
Santa Monica, CA 90404

PROJECT

KoningEizenbergArchitecture
1454 25th St, Santa Monica, CA 90404

310.828.6131 info@kearch.com
310.828.0719 fax www.kearch.com

ARCHITECT'S PROJECT NO.
1001

ARCHITECT

All designs, ideas, arrangements and plans indicated by these drawings are the property and copyright of the Architect and shall neither be used on any other work nor be disclosed to any other person for any use whatsoever without written permission.

Koning Eizenberg Architecture and/or its principals and employees waives any and all liability or responsibility for problems that may occur when these plans, drawings, specifications, and/or designs are followed without the professional's guidance with ambiguities, or conflicts which are alleged.

CONSULTANT

City of Santa Monica
Architecture Services

1437 4TH STREET, SUITE 300
SANTA MONICA, CA 90401
TEL. (310) 458-2205
FAX. (310) 399-1541
architecture@smgov.net

DATE : 20
SUBMITTED BY :

DATE : 20
APPROVED BY :
Miriam Mulder,
Architecture Services Manager

CITY OF SANTA MONICA
DEPARTMENT OF PUBLIC WORKS

REVIEWED BY : DATE : 20

REVIEWED BY : DATE : 20

REVIEWED BY : DATE : 20

CITY CLIENT

NO.	DATE	BY	DESCRIPTION

REVISIONS

ISSUE
65% CONSTRUCTION DOCUMENTS / BID SET

DATE
01/23/2012

DRAWING NO. **6693**

SHEET OF SHEETS

SHEET TITLE
WALL SECTIONS

SHEET NO.
A5.00

SHEET OF

DWG NO. -

TITLE OF PROJECT :

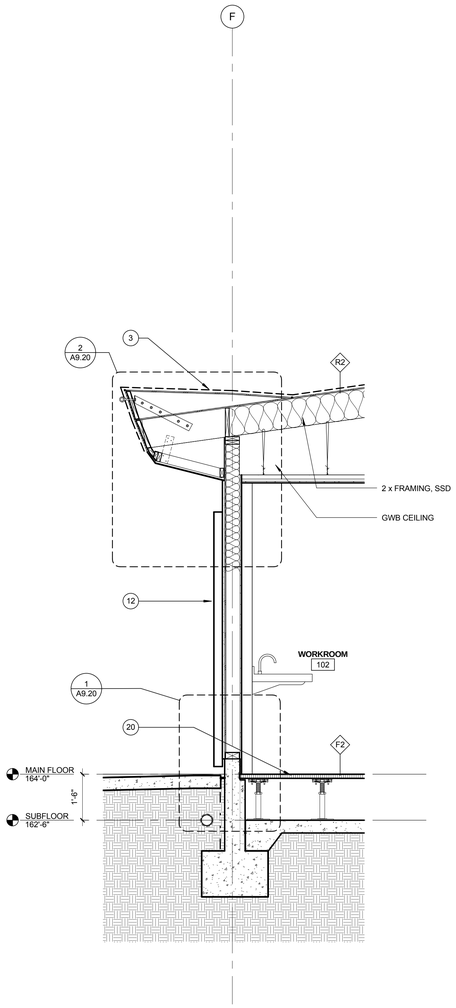

WALL SECTION @ WORK ROOM | 0 6" 1' 2' | 1/2" = 1'-0" | 4

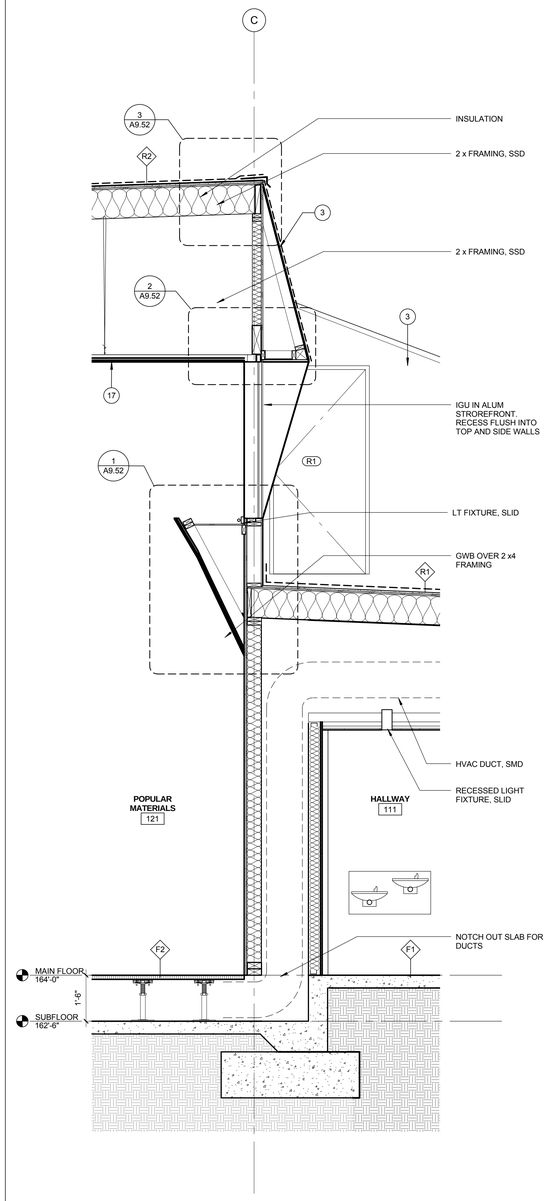

WALL SECTION @ CLERESTORY | 0 6" 1' 2' | 1/2" = 1'-0" | 3

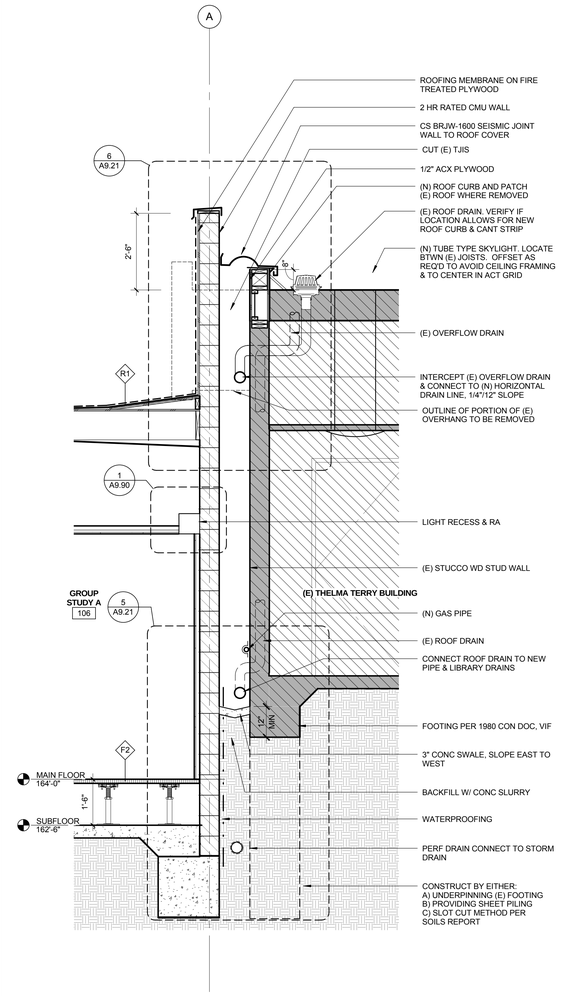

WALL SECTION @ NORTH TT | 0 6" 1' 2' | 1/2" = 1'-0" | 2

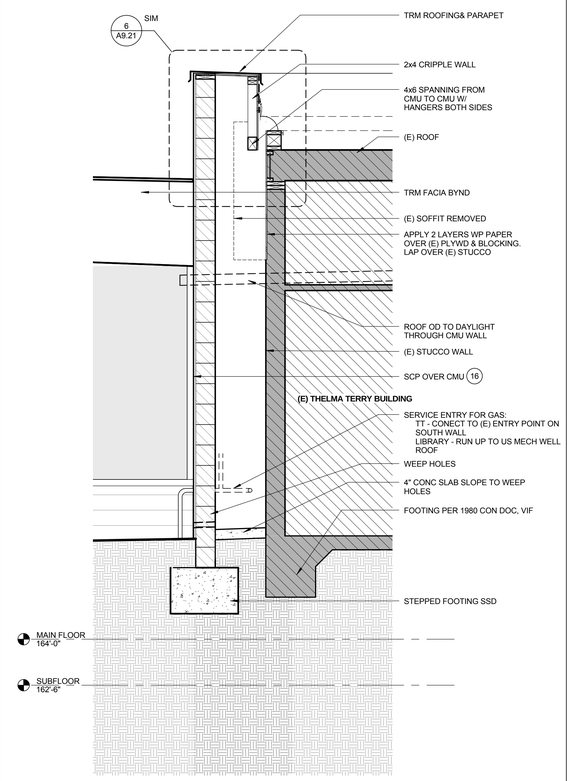

WALL SECTION @ WEST TT | 0 6" 1' 2' | 1/2" = 1'-0" | 1

MATERIAL KEYNOTES

1. SMOOTH STL TROWELLED CEMENT PLASTER, PAINTED WHITE W/ ANTI GRAFFITI COATING
2. GALV STL TRELLIS WITH GALVD STL TUBE SECTIONS ABV, SSD
3. THERMOPLASTIC MEMBRANE ROOFING, LIGHT GRAY OR WHITE, SEE ROOF PLAN
4. SMOOTH STL TROWELLED CEMENT SOFFIT TYP
5. THERMOPLASTIC MEMBRANE FASCIA TO MATCH ROOFING
6. EXTRUDED ALUMINUM GLAZING SYSTEM WITH LOW REFLECTIVITY GLASS, CLEAR ANONDIZED FINISH
7. DIMPLED MTL PANEL FROM CUSTOM DIE W/ KYNAR FACTORY FINISH, PATTERN TBD
8. BUTT-JOINT INSULATED GLASS IN ALUM FRAME, CLR ANNOD
9. METAL MESH GUARDRAIL
10. CUSTOM COLORED FIRE RETARDENT FABRIC CANOPY SUSP ON SS AIRCRAFT CABLE. FABRIC TO BE APPROVED BY FIRE DEPT
11. SOLAR PANELS WITH TRANSPARENT BACKSHEET ON GALV STL TRELLIS
12. PERF MTL PANEL W/ KYNAR FINISH, CUSTOM PATTERN TBD
13. NOT USED
14. NOT USED
15. ALUM GRATING
16. PTD SMOOTH STL TROWELLED CEMENT PLASTER TO MATCH (E) THELMA TERRY
17. SUSPENDED ACOUSTIC PLASTER SYSTEM
18. RECESSED LIGHT FIXTURE
19. SS EYE NUT TO CANOPY SUPPORT
20. RAISED ACCESS FLOOR OVER SLAB ON GRADE, SEE FINISH PLAN FOR FINISH INFO
21. BOARD FORMED CONCRETE WALL
22. HORIZONTAL BUTT JOINT
23. EXT GLASS SYSTEM IN CUSTOM STL FRAME, PTD
24. PRE-CAST CONC PLANKS

PICO BRANCH LIBRARY

2201 Pico Blvd.
Santa Monica, CA 90404

PROJECT

KoningEizenbergArchitecture
1454 25th St, Santa Monica, CA 90404

310.828.6131 info@kearch.com
310.828.0719 fax www.kearch.com

ARCHITECT'S PROJECT NO.
1001

ARCHITECT

All designs, ideas, arrangements and plans indicated by these drawings are the property and copyright of the Architect and shall neither be used on any other work nor be disclosed to any other person for any use whatsoever without written permission.

Koning Eizenberg Architecture and/or its principals and employees waives any and all liability or responsibility for problems that may occur when these plans, drawings, specifications, and/or designs are followed without the professional's guidance with ambiguities, or conflicts which are alleged.

CONSULTANT

City of Santa Monica Architecture Services
1437 4TH STREET, SUITE 300
SANTA MONICA, CA 90401
TEL. (310) 458-2205
FAX. (310) 399-1541
architecture@smgov.net

SUBMITTED BY : DATE : 20

APPROVED BY : DATE : 20
Miriam Mulder,
Architecture Services Manager

CITY OF SANTA MONICA
DEPARTMENT OF PUBLIC WORKS

REVIEWED BY : DATE : 20

REVIEWED BY : DATE : 20

REVIEWED BY : DATE : 20

CITY CLIENT

NO.	DATE	BY	DESCRIPTION

REVISIONS

ISSUE
65% CONSTRUCTION DOCUMENTS / BID SET

DATE
01/23/2012

DRAWING NO. **6693**

SHEET OF SHEETS

SHEET TITLE
WALL SECTIONS

SHEET NO.
A5.10

SHEET OF
DWG NO. -
TITLE OF PROJECT:

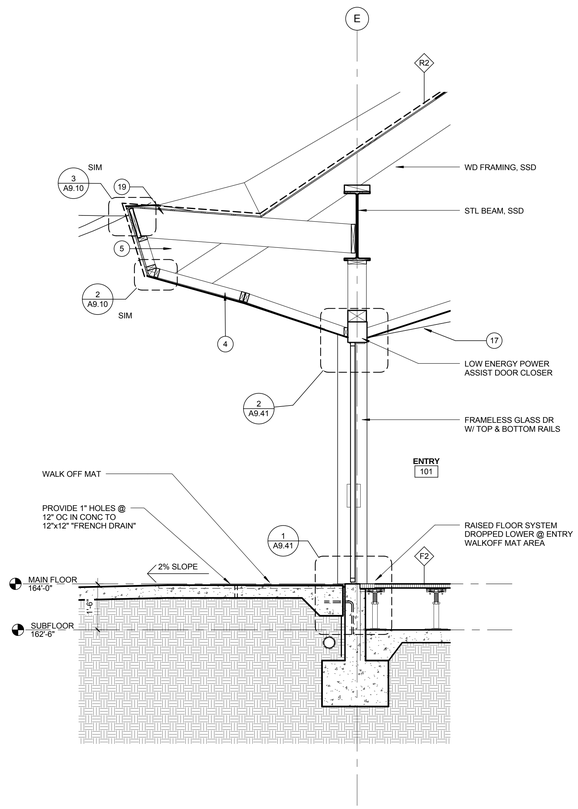

WALL SECTION @ ENTRY | 0 6" 1' 2' | 1/2" = 1'-0" | 3

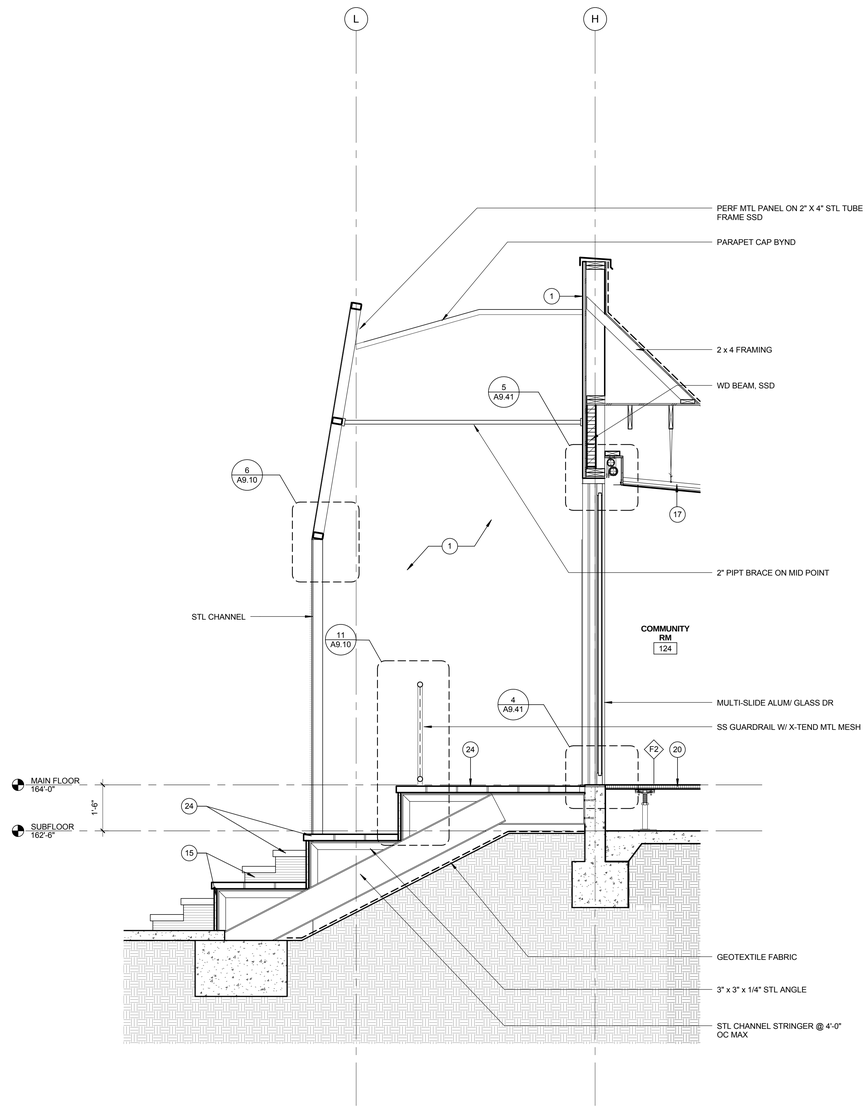

WALL SECTION @ SOUTH COMMUNITY RM | 0 6" 1' 2' | 1/2" = 1'-0" | 2

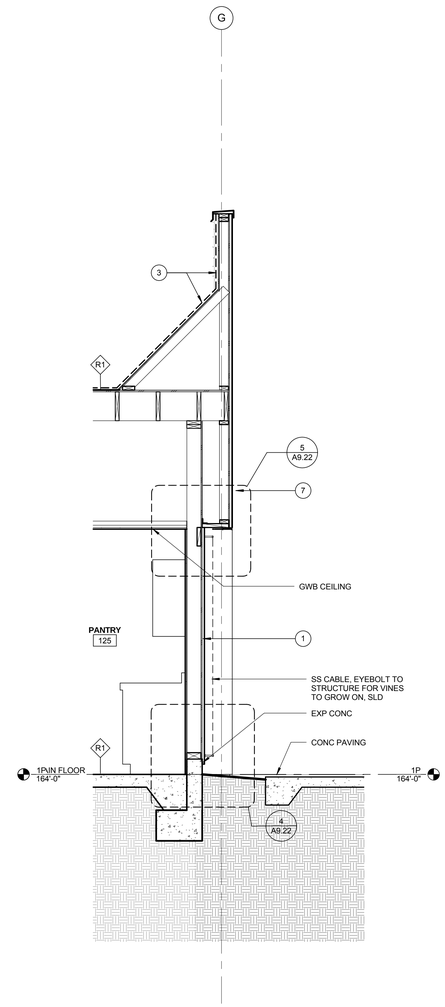

WALL SECTION @ NORTH COMMUNITY RM | 0 6" 1' 2' | 1/2" = 1'-0" | 1

MATERIAL KEYNOTES

1. SMOOTH STL TROWELLED CEMENT PLASTER, PAINTED WHITE W/ ANTI GRAFFITI COATING
2. GALV STL TRELLIS WITH GALVD STL TUBE SECTIONS ABV, SSD
3. THERMOPLASTIC MEMBRANE ROOFING, LIGHT GRAY OR WHITE, SEE ROOF PLAN
4. SMOOTH STL TROWELLED CEMENT SOFFIT TYP
5. THERMOPLASTIC MEMBRANE FASCIA TO MATCH ROOFING
6. EXTRUDED ALUMINUM GLAZING SYSTEM WITH LOW REFLECTIVITY GLASS, CLEAR ANONDIZED FINISH
7. DIMPLED MTL PANEL FROM CUSTOM DIE W/ KYNAR FACTORY FINISH, PATTERN TBD
8. BUTT-JOINT INSULATED GLASS IN ALUM FRAME, CLR ANNOD
9. METAL MESH GUARDRAIL
10. CUSTOM COLORED FIRE RETARDENT FABRIC CANOPY SUSP ON SS AIRCRAFT CABLE. FABRIC TO BE APPROVED BY FIRE DEPT
11. SOLAR PANELS WITH TRANSPARENT BACKSHEET ON GALV STL TRELLIS
12. PERF MTL PANEL W/ KYNAR FINISH, CUSTOM PATTERN TBD
13. NOT USED
14. NOT USED
15. ALUM GRATING
16. PTD SMOOTH STL TROWELLED CEMENT PLASTER TO MATCH (E) THELMA TERRY
17. SUSPENDED ACOUSTIC PLASTER SYSTEM
18. RECESSED LIGHT FIXTURE
19. SS EYE NUT TO CANOPY SUPPORT
20. RAISED ACCESS FLOOR OVER SLAB ON GRADE, SEE FINISH PLAN FOR FINISH INFO
21. BOARD FORMED CONCRETE WALL
22. HORIZONTAL BUTT JOINT
23. EXT GLASS SYSTEM IN CUSTOM STL FRAME, PTD
24. PRE-CAST CONC PLANKS

SHEET OF

DWG NO. -

TITLE OF PROJECT :

PICO BRANCH LIBRARY

2201 Pico Blvd.
Santa Monica, CA 90404

PROJECT

KoningEizenbergArchitecture
1454 25th St, Santa Monica, CA 90404

310.828.6131 info@kearch.com
310.828.0719 fax www.kearch.com

ARCHITECT'S PROJECT NO.
1001

ARCHITECT

All designs, ideas, arrangements and plans indicated by these drawings are the property and copyright of the Architect and shall neither be used on any other work nor be disclosed to any other person for any use whatsoever without written permission.

Koning Eizenberg Architecture and/or its principals and employees waives any and all liability or responsibility for problems that may occur when these plans, drawings, specifications, and/or designs are followed without the professional's guidance with ambiguities, or conflicts which are alleged.

CONSULTANT

City of Santa Monica
Architecture Services

1437 4TH STREET, SUITE 300
SANTA MONICA, CA 90401
TEL. (310) 458-2205
FAX. (310) 399-1541
architecture@smgov.net

DATE : 20
SUBMITTED BY :

DATE : 20
APPROVED BY :
Miriam Mulder,
Architecture Services Manager

CITY OF SANTA MONICA
DEPARTMENT OF PUBLIC WORKS

REVIEWED BY : DATE : 20

REVIEWED BY : DATE : 20

REVIEWED BY : DATE : 20

CITY CLIENT

NO.	DATE	BY	DESCRIPTION

REVISIONS

ISSUE
65% CONSTRUCTION DOCUMENTS / BID SET

DATE
01/23/2012

DRAWING NO. **6693**

SHEET OF SHEETS

SHEET TITLE
WALL SECTIONS

SHEET NO.
A5.20

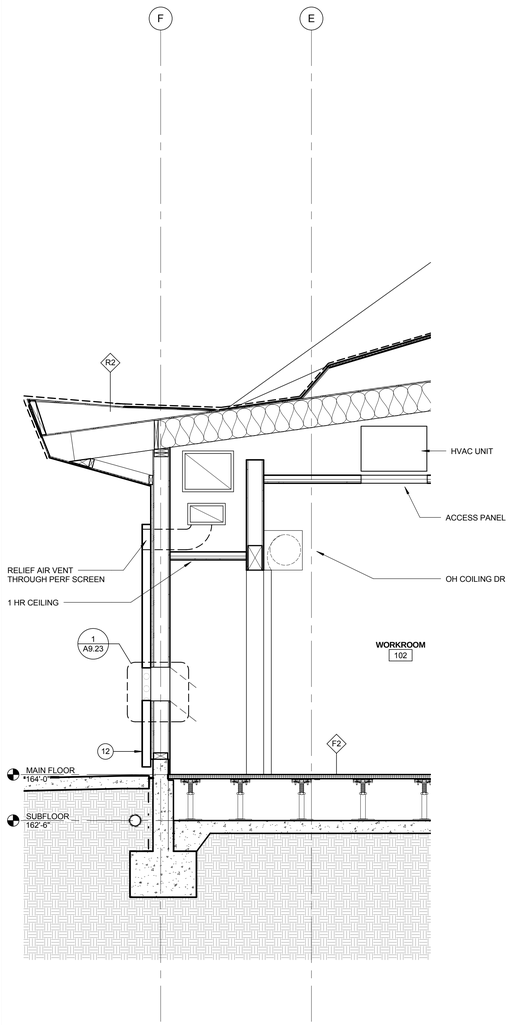

WALL SECTION @ BOOK DROP OFF 0 6" 1' 2' 1/2" = 1'-0" **1**

MATERIAL KEYNOTES

1. SMOOTH STL TROWELLED CEMENT PLASTER, PAINTED WHITE W/ ANTI GRAFFITI COATING
2. GALV STL TRELLIS WITH GALVD STL TUBE SECTIONS ABV, SSD
3. THERMOPLASTIC MEMBRANE ROOFING, LIGHT GRAY OR WHITE, SEE ROOF PLAN
4. SMOOTH STL TROWELLED CEMENT SOFFIT TYP
5. THERMOPLASTIC MEMBRANE FASCIA TO MATCH ROOFING
6. EXTRUDED ALUMINUM GLAZING SYSTEM WITH LOW REFLECTIVITY GLASS, CLEAR ANONDIZED FINISH
7. DIMPLED MTL PANEL FROM CUSTOM DIE W/ KYNAR FACTORY FINISH, PATTERN TBD
8. BUTT-JOINT INSULATED GLASS IN ALUM FRAME, CLR ANNOD
9. METAL MESH GUARDRAIL
10. CUSTOM COLORED FIRE RETARDENT FABRIC CANOPY SUSP ON SS AIRCRAFT CABLE. FABRIC TO BE APPROVED BY FIRE DEPT
11. SOLAR PANELS WITH TRANSPARENT BACKSHEET ON GALV STL TRELLIS
12. PERF MTL PANEL W/ KYNAR FINISH, CUSTOM PATTERN TBD
13. NOT USED
14. NOT USED
15. ALUM GRATING
16. PTD SMOOTH STL TROWELLED CEMENT PLASTER TO MATCH (E) THELMA TERRY
17. SUSPENDED ACOUSTIC PLASTER SYSTEM
18. RECESSED LIGHT FIXTURE
19. SS EYE NUT TO CANOPY SUPPORT
20. RAISED ACCESS FLOOR OVER SLAB ON GRADE, SEE FINISH PLAN FOR FINISH INFO
21. BOARD FORMED CONCRETE WALL
22. HORIZONTAL BUTT JOINT
23. EXT GLASS SYSTEM IN CUSTOM STL FRAME, PTD
24. PRE-CAST CONC PLANKS

PICO BRANCH LIBRARY

2201 Pico Blvd.
Santa Monica, CA 90404

PROJECT

KoningEizenbergArchitecture
1454 25th St, Santa Monica, CA 90404

310.828.6131 info@kearch.com
310.828.0719 fax www.kearch.com

ARCHITECT'S PROJECT NO.
1001

ARCHITECT

All designs, ideas, arrangements and plans indicated by these drawings are the property and copyright of the Architect and shall neither be used on any other work nor be disclosed to any other person for any use whatsoever without written permission.

Koning Eizenberg Architecture and/or its principals and employees waives any and all liability or responsibility for problems that may occur when these plans, drawings, specifications, and/or designs are followed without the professional's guidance with ambiguities, or conflicts which are alleged.

CONSULTANT

City of Santa Monica
Architecture Services

1437 4TH STREET, SUITE 300
SANTA MONICA, CA 90401
TEL. (310) 458-2205
FAX. (310) 399-1541
architecture@smgov.net

DATE : _____ 20 __
SUBMITTED BY :

DATE : _____ 20 __
APPROVED BY :
Miriam Mulder,
Architecture Services Manager

CITY OF SANTA MONICA
DEPARTMENT OF PUBLIC WORKS

REVIEWED BY : DATE : _____ 20 __

REVIEWED BY : DATE : _____ 20 __

REVIEWED BY : DATE : _____ 20 __

CITY CLIENT

NO.	DATE	BY	DESCRIPTION

REVISIONS

ISSUE
65% CONSTRUCTION DOCUMENTS / BID SET

DATE
01/23/2012

DRAWING NO. **6693**

SHEET OF SHEETS

SHEET TITLE
WALL SECTIONS

SHEET NO.
A5.30

SHEET OF

DWG NO. -

TITLE OF PROJECT :

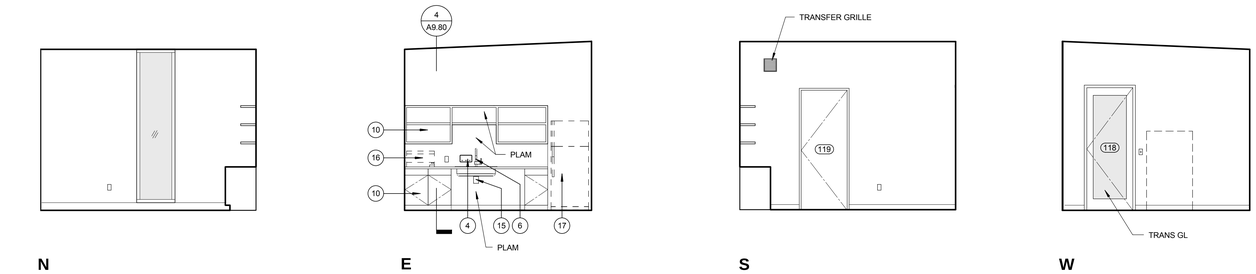

N E S W

STAFF LOUNGE 0 1' 2' 4' 1/4" = 1'-0" **8**

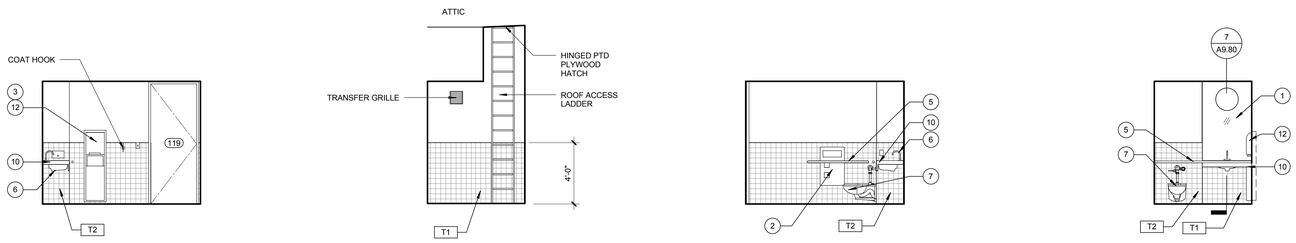

N E S W

WC 119 0 1' 2' 4' 1/4" = 1'-0" **7**

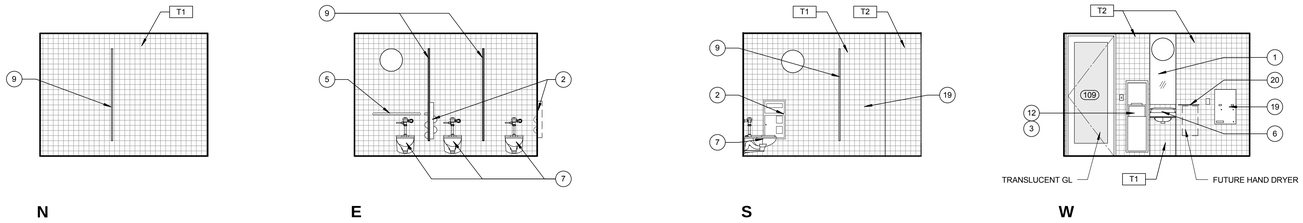

N E S W

WMNS RESTROOM 0 1' 2' 4' 1/4" = 1'-0" **6**

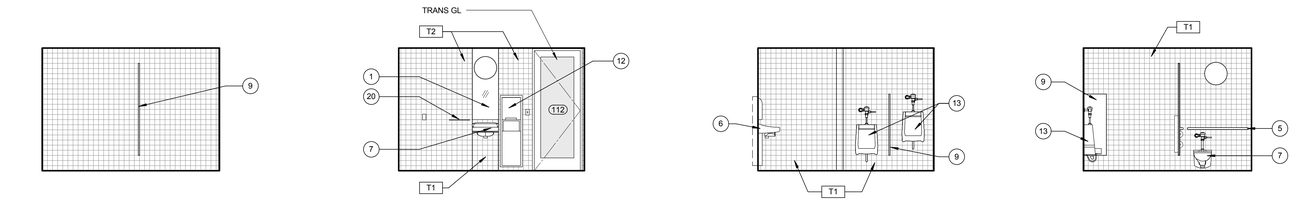

N E S W

MENS RESTROOM 0 1' 2' 4' 1/4" = 1'-0" **5**

N E S W

WC 113 0 1' 2' 4' 1/4" = 1'-0" **4**

NOTE:

SEE SHEET A0.60 - ADA DIAGRAMS FOR ADDITIONAL MOUNTING HEIGHT DIMENSIONS

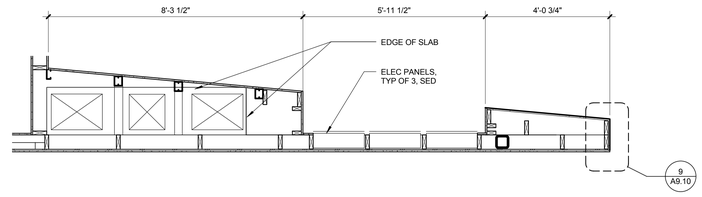

ENLARGED MECH SHAFT 0 1' 2' 4' 1/2" = 1'-0" **3**

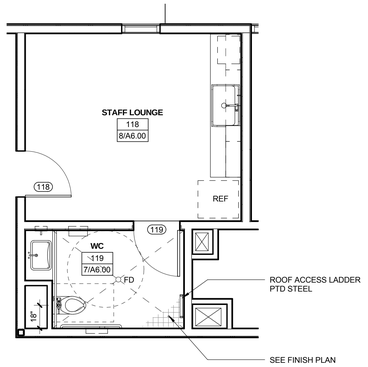

WC 119 AND STAFF LOUNGE 0 1' 2' 4' 1/4" = 1'-0" **2**

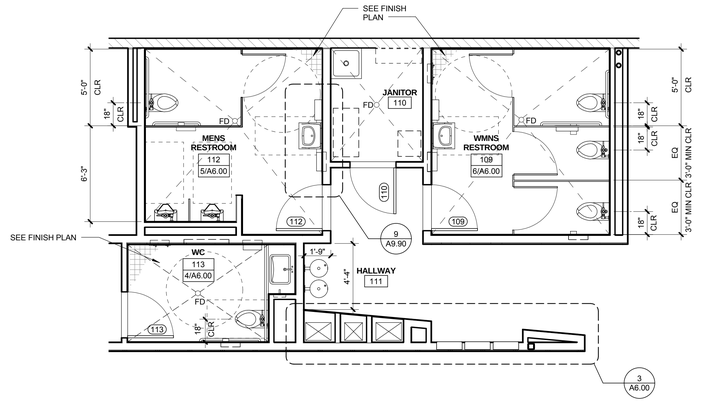

MEN AND WMNS RESTROOM 0 1' 2' 4' 1/4" = 1'-0" **1**

INTERIOR ELEVATION GENERAL NOTES

1. UNO IN DRAWINGS OR SPEC FLOOR TILES TO BE 2X2 MATTE. WALL TILE TO BE 4X4 GLOSS IN UP TO 4 COLORS
2. ALL TILE T1 UNO
3. ALL WALLS GWB U.N.O ALLOW UP TO 4 COLORS PTD
4. PROVIDE N-TYPE COAT HOOK ON ALL PARTITION DOORS, TYP
5. PROVIDE P-TYPE COAT HOOKS IN EACH RESTROOM
6. SEE A8.00 FOR REFLECTED CEILING PLAN
7. SEE A9.10 FOR WALL ASSEMBLIES
8. SEE A9.40 FOR FINISH & BASE SCHEDULE
9. SEE SHEET A0.80 FOR MIN CLR DIMS OF PLUMBING FIXTURES & ACCESSIBILITY NOTES.
10. STAFF RESTROOM 119 TILE TO 4' ABOVE FLOOR
11. TILE ALL PUBLIC RESTRROOM WALLS FULL HEIGHT (ROOMS 112 109 113 129)
12. ALL FURN AND EQUIP SHOWN AS DASHED IN INTERIOR ELEVATIONS TYP. FURN AND EQUIP TO BE COORDINATED BY GC AND OWNER SUPPLIED. SEE SPEC
13. ALL BUILT-IN CABINET/ MILLWORK TO BE MULTI-PLY W/ P-LAM EDGE FINISH, FULL OVERLAY DOORS, EURO HINGE W/ 4" KICK PLATE
14. BLOCKING IN WALL TYPICAL FOR ALL AREAS W/ SHELVING AND SYS FURN

INTERIOR ELEVATION KEYNOTES

1. FRAMELESS MIRROR
2. SEAT COVER/ TOILET PAPER DISPENSER
3. TRASH BIN
4. SOAP DISPENSER
5. GRAB BARS
6. SINK & FAUCET
7. TOILET
8. DRINKING FOUNTAIN
9. BAKED ENAMEL TOILET PARTITION
10. BUILT-IN SHELF / COUNTERTOP
11. FURNITURE & EQUIPMENT
12. PAPER TOWEL DISPENSER RECESSED
13. URINAL
14. CHANGING TABLE RECESSED
15. GARBAGE DISP
16. MICROWAVE
17. REFRIDGERATOR
18. COAT HOOK
19. SANITARY NAPKIN DISPENSER
20. SHELF

N
W ROOM E
S

PICO BRANCH LIBRARY

2201 Pico Blvd.
Santa Monica, CA 90404

PROJECT

KoningEizenbergArchitecture
1454 25th St, Santa Monica, CA 90404

310.828.6131 info@kearch.com
310.828.0719 fax www.kearch.com

ARCHITECT'S PROJECT NO.
1001

ARCHITECT

All designs, ideas, arrangements and plans indicated by these drawings are the property and copyright of the Architect and shall neither be used on any other work nor be disclosed to any other person for any use whatsoever without written permission.

Koning Eizenberg Architecture and/or its principals and employees waives any and all liability or responsibility for problems that may occur when these plans, drawings, specifications, and/or designs are followed without the professional's guidance with ambiguities, or conflicts which are alleged.

CONSULTANT

City of Santa Monica
Architecture Services

1437 4TH STREET, SUITE 300
SANTA MONICA, CA 90401
TEL. (310) 458-2205
FAX. (310) 399-1541
architecture@smgov.net

DATE : 20
SUBMITTED BY :

DATE : 20
APPROVED BY :
Miriam Mulder,
Architecture Services Manager
CITY OF SANTA MONICA
DEPARTMENT OF PUBLIC WORKS

REVIEWED BY : DATE : 20

REVIEWED BY : DATE : 20

REVIEWED BY : DATE : 20

CITY CLIENT

NO.	DATE	BY	DESCRIPTION

REVISIONS

ISSUE
65% CONSTRUCTION DOCUMENTS / BID SET

DATE
01/23/2012

DRAWING NO. **6693**

SHEET OF SHEETS

SHEET TITLE
ENLARGED PLANS

SHEET NO.
A6.00

SHEET OF

DWG NO. -

TITLE OF PROJECT

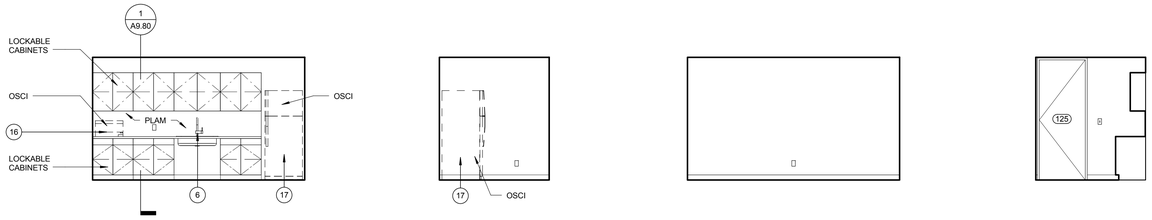

N E S W

PANTRY 125 0 1' 2' 4' 1/4" = 1'-0" **5**

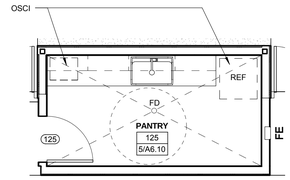

PANTRY 0 1' 2' 4' 1/4" = 1'-0" **2**

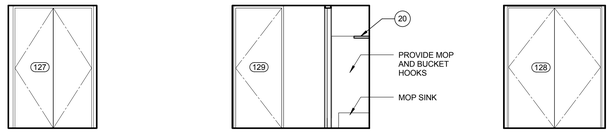

N S W

HALLWAY 126 0 1' 2' 4' 1/4" = 1'-0" **4**

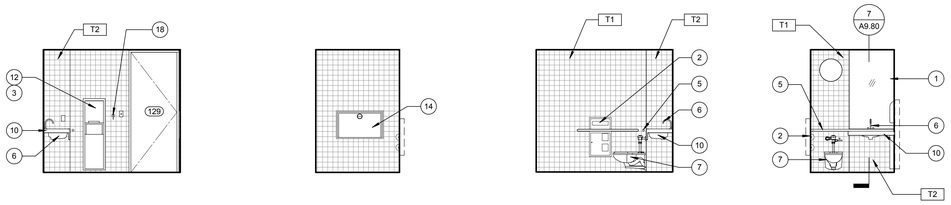

N E S W

WC 129 0 1' 2' 4' 1/4" = 1'-0" **3**

WC129 0 1' 2' 4' 1/4" = 1'-0" **1**

INTERIOR ELEVATION GENERAL NOTES

1. UNO IN DRAWINGS OR SPEC FLOOR TILES TO BE 2X2 MATTE. WALL TILE TO BE 4X4 GLOSS IN UP TO 4 COLORS
2. ALL TILE T1 UNO
3. ALL WALLS GWB U.N.O ALLOW UP TO 4 COLORS PTD
4. PROVIDE N-TYPE COAT HOOK ON ALL PARTITION DOORS, TYP
5. PROVIDE P-TYPE COAT HOOKS IN EACH RESTROOM
6. SEE A8.00 FOR REFLECTED CEILING PLAN
7. SEE A9.10 FOR WALL ASSEMBLIES
8. SEE A9.40 FOR FINISH & BASE SCHEDULE
9. SEE SHEET A0.80 FOR MIN CLR DIMS OF PLUMBING FIXTURES & ACCESSIBILITY NOTES.
10. STAFF RESTROOM 119 TILE TO 4' ABOVE FLOOR
11. TILE ALL PUBLIC RESTRROOM WALLS FULL HEIGHT (ROOMS 112 109 113 129)
12. ALL FURN AND EQUIP SHOWN AS DASHED IN INTERIOR ELEVATIONS TYP. FURN AND EQUIP TO BE COORDINATED BY GC AND OWNER SUPPLIED. SEE SPEC
13. ALL BUILT-IN CABINET/ MILLWORK TO BE MULTI-PLY W/ P-LAM EDGE FINISH, FULL OVERLAY DOORS, EURO HINGE W/ 4" KICK PLATE
14. BLOCKING IN WALL TYPICAL FOR ALL AREAS W/ SHELVING AND SYS FURN

INTERIOR ELEVATION KEYNOTES

1. FRAMELESS MIRROR
2. SEAT COVER/ TOILET PAPER DISPENSER
3. TRASH BIN
4. SOAP DISPENSER
5. GRAB BARS
6. SINK & FAUCET
7. TOILET
8. DRINKING FOUNTAIN
9. BAKED ENAMEL TOILET PARTITION
10. BUILT-IN SHELF / COUNTERTOP
11. FURNITURE & EQUIPMENT
12. PAPER TOWEL DISPENSER RECESSED
13. URINAL
14. CHANGING TABLE RECESSED
15. GARBAGE DISP
16. MICROWAVE
17. REFRIDGERATOR
18. COAT HOOK
19. SANITARY NAPKIN DISPENSER
20. SHELF

N
W ROOM E
S

PICO BRANCH LIBRARY

2201 Pico Blvd.
Santa Monica, CA 90404

PROJECT

KoningEizenbergArchitecture
1454 25th St, Santa Monica, CA 90404
310.828.6131 info@kearch.com
310.828.0719 fax www.kearch.com

ARCHITECT'S PROJECT NO.
1001

ARCHITECT

All designs, ideas, arrangements and plans indicated by these drawings are the property and copyright of the Architect and shall neither be used on any other work nor be disclosed to any other person for any use whatsoever without written permission.

Koning Eizenberg Architecture and/or its principals and employees waives any and all liability or responsibility for problems that may occur when these plans, drawings, specifications, and/or designs are followed without the professional's guidance with ambiguities, or conflicts which are alleged.

CONSULTANT

City of Santa Monica Architecture Services
1437 4TH STREET, SUITE 300
SANTA MONICA, CA 90401
TEL. (310) 458-2205
FAX. (310) 399-1541
architecture@smgov.net

SUBMITTED BY : DATE : 20

APPROVED BY : DATE : 20
Miriam Mulder,
Architecture Services Manager
CITY OF SANTA MONICA
DEPARTMENT OF PUBLIC WORKS

REVIEWED BY : DATE : 20

REVIEWED BY : DATE : 20

REVIEWED BY : DATE : 20

CITY CLIENT

NO.	DATE	BY	DESCRIPTION

REVISIONS

ISSUE
65% CONSTRUCTION DOCUMENTS / BID SET

DATE
01/23/2012

DRAWING NO. **6693**

SHEET OF SHEETS

SHEET TITLE
ENLARGED PLANS

SHEET NO.
A6.10

SHEET OF

DWG. NO. - -

TITLE OF PROJECT:

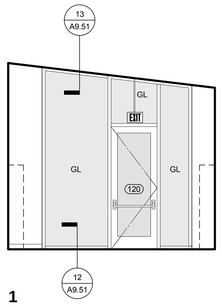

1

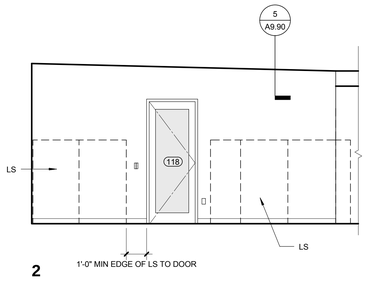

2

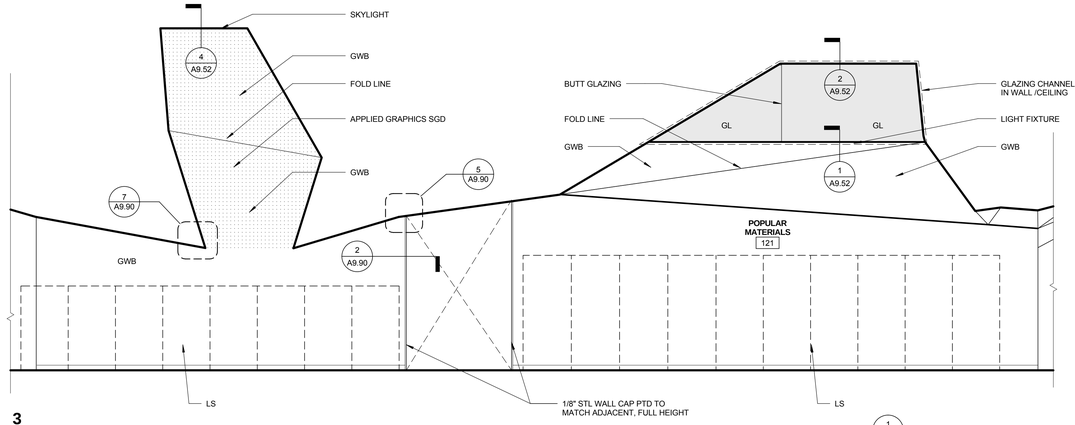

3

NOTE:

LIBRARY SHELVING (LS) SHOWN AS DASHED IS TO BE BID BY CITY SELECTED VENDOR. PRODUCT CONTRACT WILL BE ASSIGNED TO GC. SEE SPECIFICATION SECTION 011000, 012100

GC TO PROVIDE ELECTRICAL HOOK UP JBOX BELOW RAF FOR SHELVING MOUNTED LIGHTING AS PER ELEC DWGS

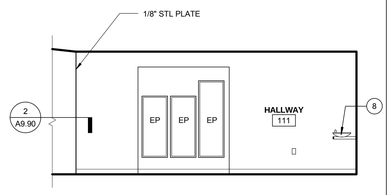

4

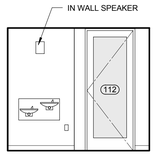

5

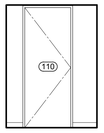

6

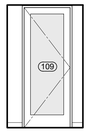

7

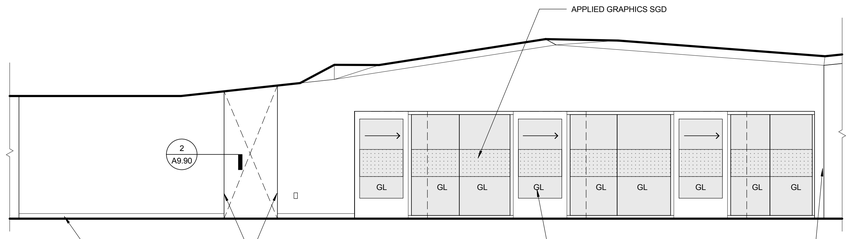

8

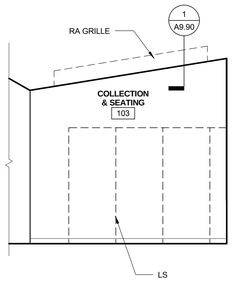

9

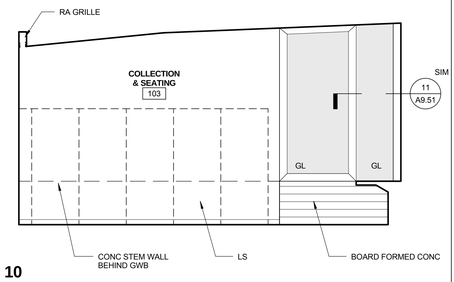

10

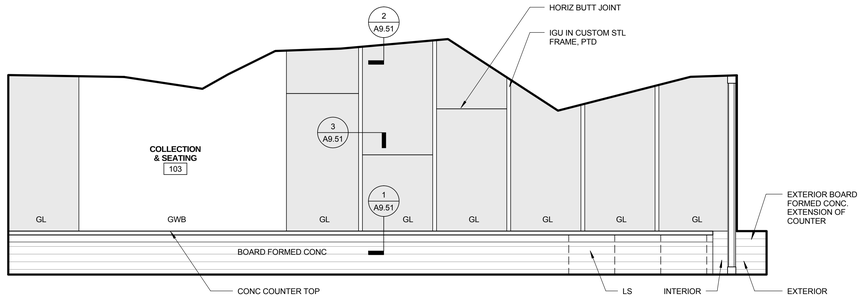

11

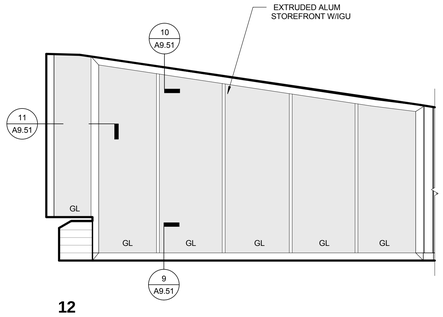

12

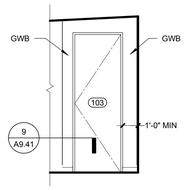

13

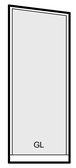

14

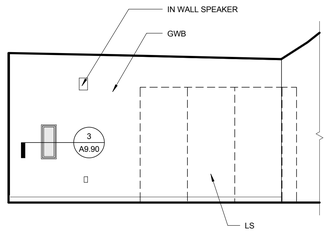

15

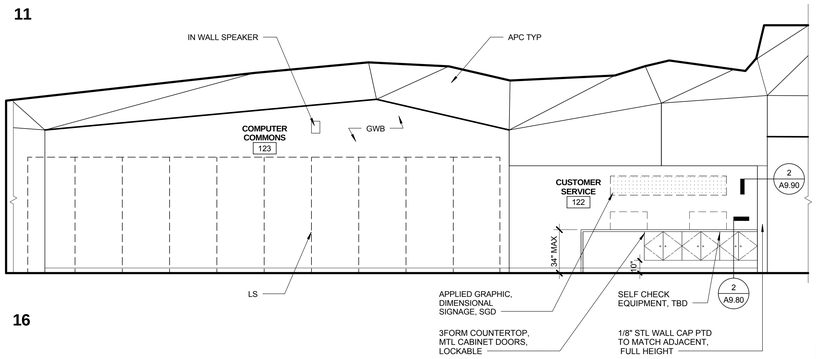

16

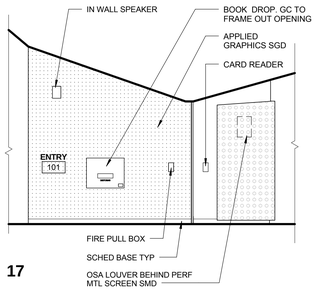

17

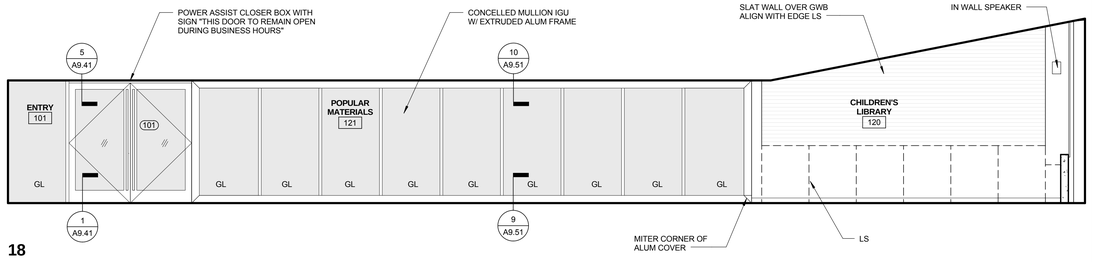

18

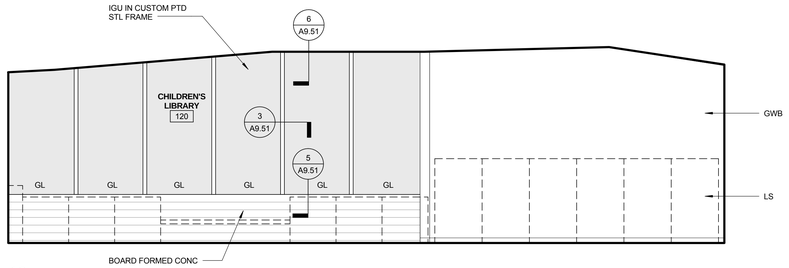

19

KEY PLAN

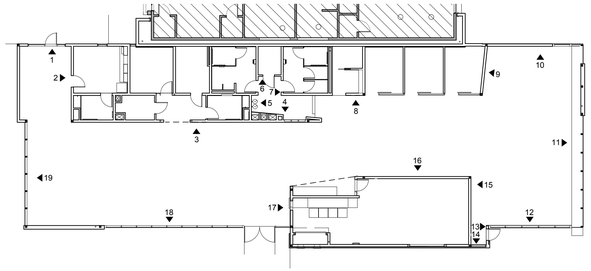

INTERIOR ELEVATION GENERAL NOTES

1. UNO IN DRAWINGS OR SPEC FLOOR TILES TO BE 2X2 MATTE. WALL TILE TO BE 4X4 GLOSS IN UP TO 4 COLORS
2. ALL TILE T1 UNO
3. ALL WALLS GWB U.N.O ALLOW UP TO 4 COLORS PTD
4. PROVIDE N-TYPE COAT HOOK ON ALL PARTITION DOORS, TYP
5. PROVIDE P-TYPE COAT HOOKS IN EACH RESTROOM
6. SEE A8.00 FOR REFLECTED CEILING PLAN
7. SEE A9.10 FOR WALL ASSEMBLIES
8. SEE A9.40 FOR FINISH & BASE SCHEDULE
9. SEE SHEET A0.80 FOR MIN CLR DIMS OF PLUMBING FIXTURES & ACCESSIBILITY NOTES.
10. STAFF RESTROOM 119 TILE TO 4' ABOVE FLOOR
11. TILE ALL PUBLIC RESTRROOM WALLS FULL HEIGHT (ROOMS 112 109 113 129)
12. ALL FURN AND EQUIP SHOWN AS DASHED IN INTERIOR ELEVATIONS TYP. FURN AND EQUIP TO BE COORDINATED BY GC AND OWNER SUPPLIED. SEE SPEC
13. ALL BUILT-IN CABINET/ MILLWORK TO BE MULTI-PLY W/ P-LAM EDGE FINISH, FULL OVERLAY DOORS, EURO HINGE W/ 4" KICK PLATE
14. BLOCKING IN WALL TYPICAL FOR ALL AREAS W/ SHELVING AND SYS FURN

INTERIOR ELEVATION KEYNOTES

1. FRAMELESS MIRROR
2. SEAT COVER/ TOILET PAPER DISPENSER
3. TRASH BIN
4. SOAP DISPENSER
5. GRAB BARS
6. SINK & FAUCET
7. TOILET
8. DRINKING FOUNTAIN
9. BAKED ENAMEL TOILET PARTITION
10. BUILT-IN SHELF / COUNTERTOP
11. FURNITURE & EQUIPMENT
12. PAPER TOWEL DISPENSER RECESSED
13. URINAL
14. CHANGING TABLE RECESSED
15. GARBAGE DISP
16. MICROWAVE
17. REFRIDGERATOR
18. COAT HOOK
19. SANITARY NAPKIN DISPENSER
20. SHELF

LIBRARY | 0 1' 2' 4' | 1/4" = 1'-0" | 1

PICO BRANCH LIBRARY

2201 Pico Blvd.
Santa Monica, CA 90404

PROJECT

KoningEizenbergArchitecture
1454 25th St, Santa Monica, CA 90404

310.828.6131 info@kearch.com
310.828.0719 fax www.kearch.com

ARCHITECT'S PROJECT NO.
1001

ARCHITECT

All designs, ideas, arrangements and plans indicated by these drawings are the property and copyright of the Architect and shall neither be used on any other work nor be disclosed to any other person for any use whatsoever without written permission.

Koning Eizenberg Architecture and/or its principals and employees waives any and all liability or responsibility for problems that may occur when these plans, drawings, specifications, and/or designs are followed without the professional's guidance with ambiguities, or conflicts which are alleged.

CONSULTANT

City of Santa Monica Architecture Services

1437 4TH STREET, SUITE 300
SANTA MONICA, CA 90401
TEL. (310) 458-2205
FAX. (310) 399-1541
architecture@smgov.net

DATE : 20
SUBMITTED BY :

DATE : 20
APPROVED BY :
Miriam Mulder,
Architecture Services Manager
CITY OF SANTA MONICA
DEPARTMENT OF PUBLIC WORKS

REVIEWED BY : DATE : 20

REVIEWED BY : DATE : 20

REVIEWED BY : DATE : 20

CITY CLIENT

NO.	DATE	BY	DESCRIPTION

REVISIONS

ISSUE
65% CONSTRUCTION DOCUMENTS / BID SET

DATE
01/23/2012

DRAWING NO.
6693

SHEET OF SHEETS

SHEET TITLE
INTERIOR ELEVATIONS

SHEET NO.
A7.00

SHEET OF

DWG NO. -

TITLE OF PROJECT

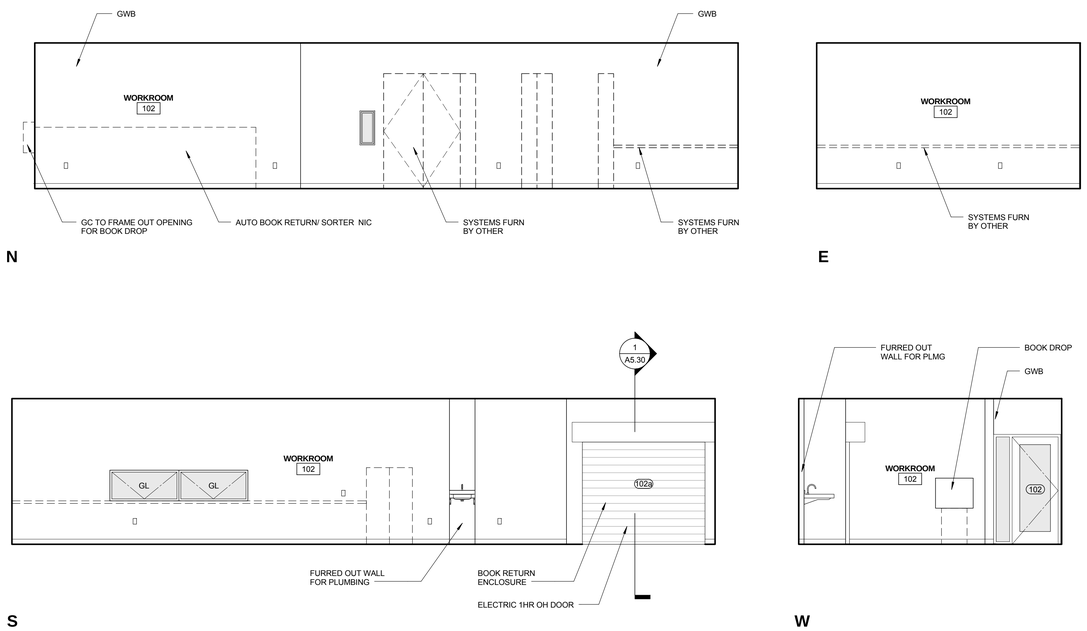

WORKROOM 102 | 0 1' 2' 4' | 1/4" = 1'-0" | **8**

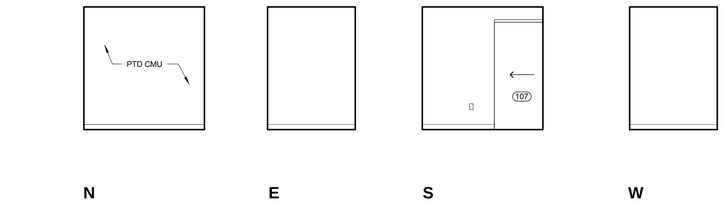

STOR 107 | 0 1' 2' 4' | 1/4" = 1'-0" | **4**

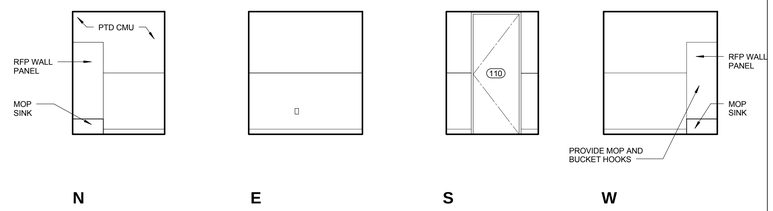

JANITOR 110 | 0 1' 2' 4' | 1/4" = 1'-0" | **3**

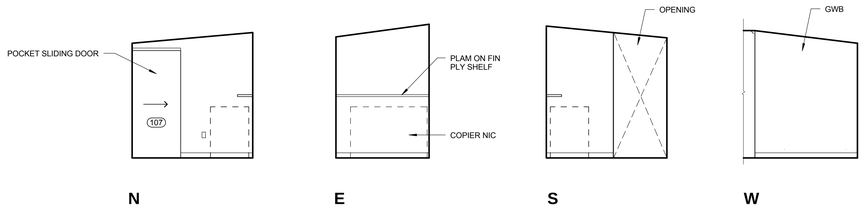

COPY RM 108 | 0 1' 2' 4' | 1/4" = 1'-0" | **7**

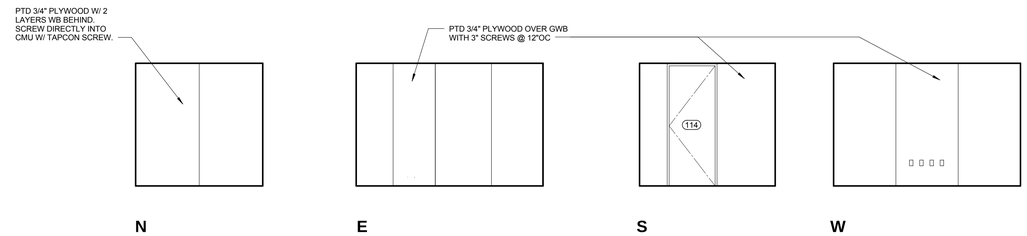

IT ROOM 114 | 0 1' 2' 4' | 1/4" = 1'-0" | **2**

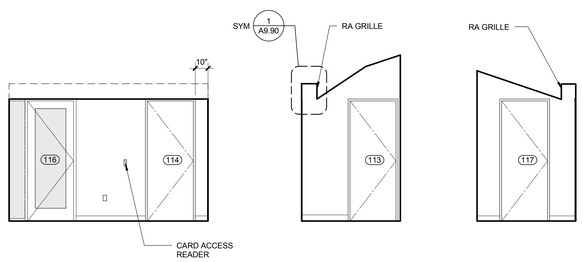

HALLWAY 115 | 0 1' 2' 4' | 1/4" = 1'-0" | **6**

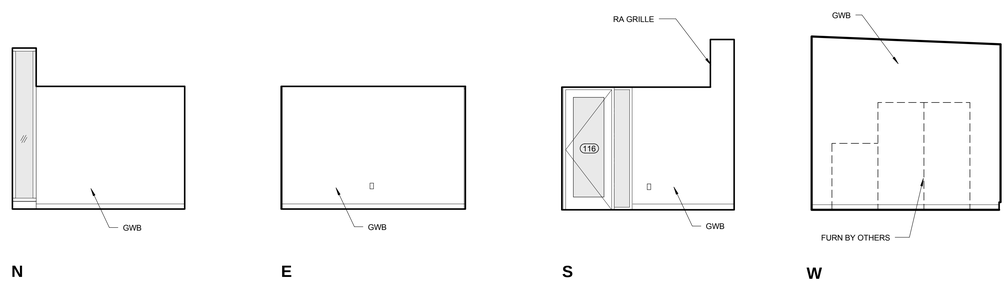

BRANCH MANAGER 116 | 0 1' 2' 4' | 1/4" = 1'-0" | **1**

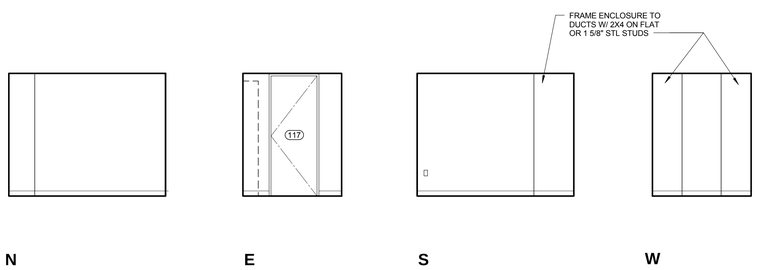

STOR 117 | 0 1' 2' 4' | 1/4" = 1'-0" | **5**

INTERIOR ELEVATION NOTES

1. UNO IN DRAWINGS OR SPEC FLOOR TILES TO BE 2X2 MATTE. WALL TILE TO BE 4X4 GLOSS IN UP TO 4 COLORS
2. ALL TILE T1 UNO
3. ALL WALLS GWB U.N.O ALLOW UP TO 4 COLORS PTD
4. PROVIDE N-TYPE COAT HOOK ON ALL PARTITION DOORS, TYP
5. PROVIDE P-TYPE COAT HOOKS IN EACH RESTROOM
6. SEE A8.00 FOR REFLECTED CEILING PLAN
7. SEE A9.10 FOR WALL ASSEMBLIES
8. SEE A9.40 FOR FINISH & BASE SCHEDULE
9. SEE SHEET A0.80 FOR MIN CLR DIMS OF PLUMBING FIXTURES & ACCESSIBILITY NOTES.
10. STAFF RESTROOM 119 TILE TO 4' ABOVE FLOOR
11. TILE ALL PUBLIC RESTRROOM WALLS FULL HEIGHT (ROOMS 112 109 113 129)
12. ALL FURN AND EQUIP SHOWN AS DASHED IN INTERIOR ELEVATIONS TYP. FURN AND EQUIP TO BE COORDINATED BY GC AND OWNER SUPPLIED. SEE SPEC
13. ALL BUILT-IN CABINET/ MILLWORK TO BE MULTI-PLY W/ P-LAM EDGE FINISH, FULL OVERLAY DOORS, EURO HINGE W/ 4" KICK PLATE
14. BLOCKING IN WALL TYPICAL FOR ALL AREAS W/ SHELVING AND SYS FURN

INTERIOR ELEVATION KEYNOTES

1. FRAMELESS MIRROR
2. SEAT COVER/ TOILET PAPER DISPENSER
3. TRASH BIN
4. SOAP DISPENSER
5. GRAB BARS
6. SINK & FAUCET
7. TOILET
8. DRINKING FOUNTAIN
9. BAKED ENAMEL TOILET PARTITION
10. BUILT-IN SHELF / COUNTERTOP
11. FURNITURE & EQUIPMENT
12. PAPER TOWEL DISPENSER RECESSED
13. URINAL
14. CHANGING TABLE RECESSED
15. GARBAGE DISP
16. MICROWAVE
17. REFRIDGERATOR
18. COAT HOOK
19. SANITARY NAPKIN DISPENSER
20. SHELF

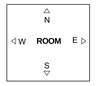

PICO BRANCH LIBRARY

2201 Pico Blvd.
Santa Monica, CA 90404

PROJECT

KoningEizenbergArchitecture
1454 25th St, Santa Monica, CA 90404

310.828.6131 info@kearch.com
310.828.0719 fax www.kearch.com

ARCHITECT'S PROJECT NO.
1001

ARCHITECT

All designs, ideas, arrangements and plans indicated by these drawings are the property and copyright of the Architect and shall neither be used on any other work nor be disclosed to any other person for any use whatsoever without written permission.

Koning Eizenberg Architecture and/or its principals and employees waives any and all liability or responsibility for problems that may occur when these plans, drawings, specifications, and/or designs are followed without the professional's guidance with ambiguities, or conflicts which are alleged.

CONSULTANT

City of Santa Monica Architecture Services

1437 4TH STREET, SUITE 300
SANTA MONICA, CA 90401
TEL. (310) 458-2205
FAX. (310) 399-1541
architecture@smgov.net

DATE : 20
SUBMITTED BY :

DATE : 20
APPROVED BY :
Miriam Mulder,
Architecture Services Manager
CITY OF SANTA MONICA
DEPARTMENT OF PUBLIC WORKS

REVIEWED BY : DATE : 20

REVIEWED BY : DATE : 20

REVIEWED BY : DATE : 20

CITY CLIENT

NO.	DATE	BY	DESCRIPTION

REVISIONS

ISSUE
65% CONSTRUCTION DOCUMENTS / BID SET

DATE
01/23/2012

DRAWING NO. **6693**

SHEET OF SHEETS

SHEET TITLE
INTERIOR ELEVATIONS

SHEET NO.
A7.10

SHEET OF

DWG NO. -

TITLE OF PROJECT

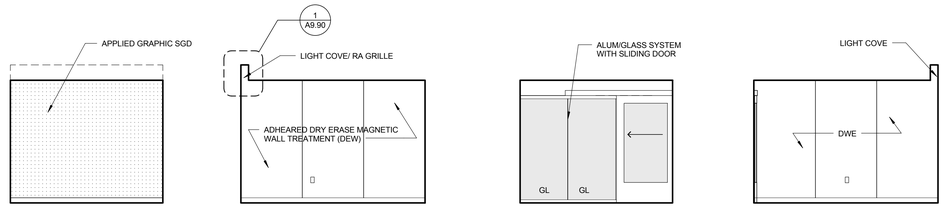

GROUP STUDY A 106 | 0 1' 2' 4' | 1/4" = 1'-0" | 7

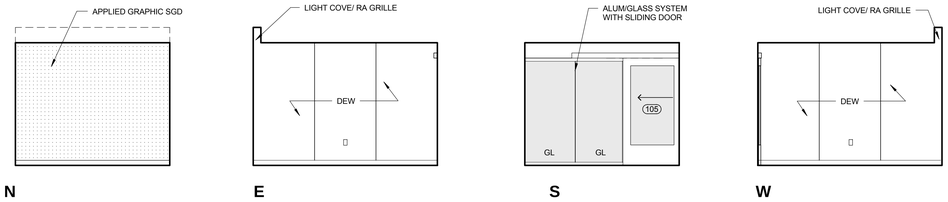

GROUP STUDY B 105 | 0 1' 2' 4' | 1/4" = 1'-0" | 6

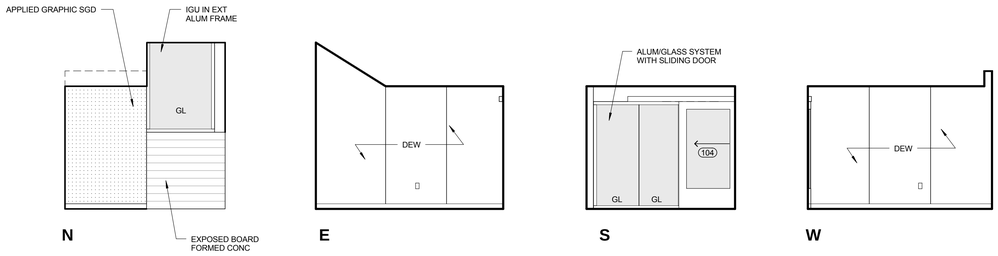

GROUP STUDY C 104 | 0 1' 2' 4' | 1/4" = 1'-0" | 5

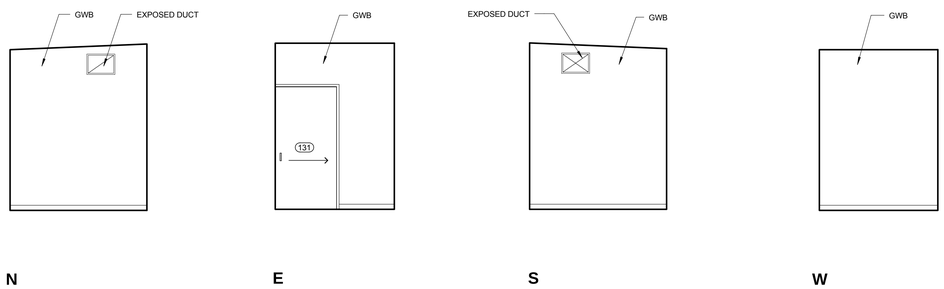

STOR 131 | 0 1' 2' 4' | 1/4" = 1'-0" | 4

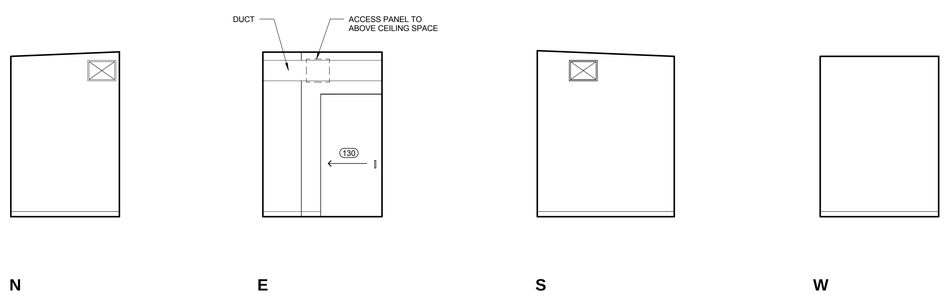

STOR 130 | 0 1' 2' 4' | 1/4" = 1'-0" | 3

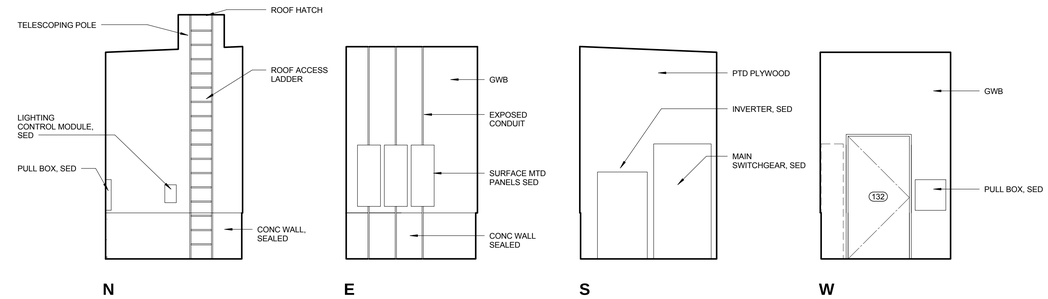

ELEC RM 132 | 0 1' 2' 4' | 1/4" = 1'-0" | 2

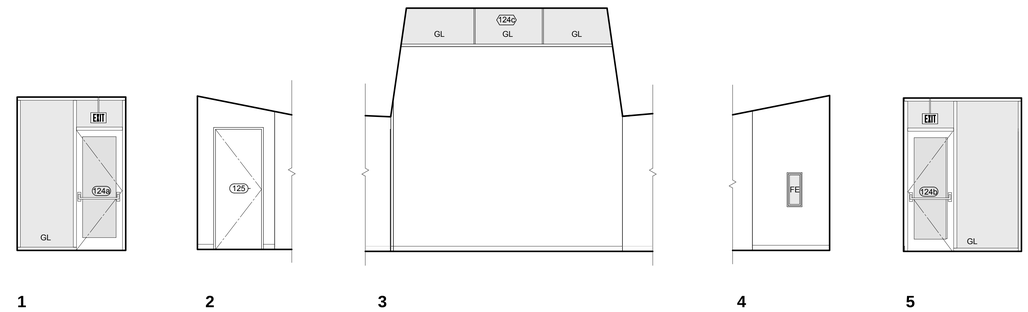

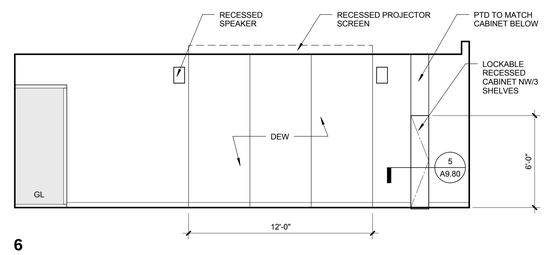

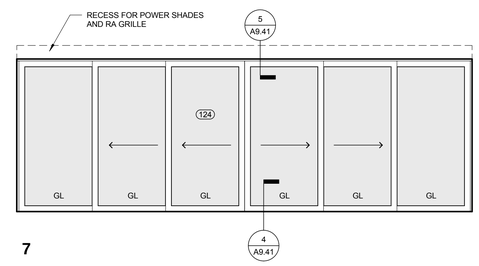

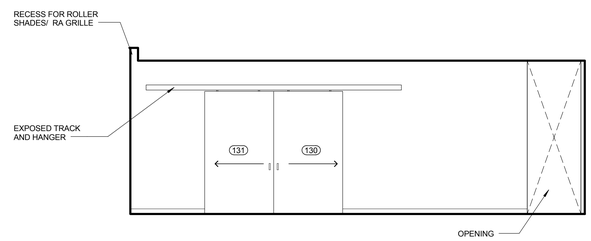

KEY PLAN

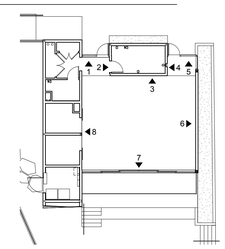

COMMUNITY RM 124 | 0 4' 8' 16' | 1/16" = 1'-0" | 1

INTERIOR ELEVATION NOTES

1. UNO IN DRAWINGS OR SPEC FLOOR TILES TO BE 2X2 MATTE. WALL TILE TO BE 4X4 GLOSS IN UP TO 4 COLORS
2. ALL TILE T1 UNO
3. ALL WALLS GWB U.N.O ALLOW UP TO 4 COLORS PTD
4. PROVIDE N-TYPE COAT HOOK ON ALL PARTITION DOORS, TYP
5. PROVIDE P-TYPE COAT HOOKS IN EACH RESTROOM
6. SEE A8.00 FOR REFLECTED CEILING PLAN
7. SEE A9.10 FOR WALL ASSEMBLIES
8. SEE A9.40 FOR FINISH & BASE SCHEDULE
9. SEE SHEET A0.80 FOR MIN CLR DIMS OF PLUMBING FIXTURES & ACCESSIBILITY NOTES.
10. STAFF RESTROOM 119 TILE TO 4' ABOVE FLOOR
11. TILE ALL PUBLIC RESTRROOM WALLS FULL HEIGHT (ROOMS 112 109 113 129)
12. ALL FURN AND EQUIP SHOWN AS DASHED IN INTERIOR ELEVATIONS TYP. FURN AND EQUIP TO BE COORDINATED BY GC AND OWNER SUPPLIED. SEE SPEC
13. ALL BUILT-IN CABINET/ MILLWORK TO BE MULTI-PLY W/ P-LAM EDGE FINISH, FULL OVERLAY DOORS, EURO HINGE W/ 4" KICK PLATE
14. BLOCKING IN WALL TYPICAL FOR ALL AREAS W/ SHELVING AND SYS FURN

INTERIOR ELEVATION KEYNOTES

1. FRAMELESS MIRROR
2. SEAT COVER/ TOILET PAPER DISPENSER
3. TRASH BIN
4. SOAP DISPENSER
5. GRAB BARS
6. SINK & FAUCET
7. TOILET
8. DRINKING FOUNTAIN
9. BAKED ENAMEL TOILET PARTITION
10. BUILT-IN SHELF / COUNTERTOP
11. FURNITURE & EQUIPMENT
12. PAPER TOWEL DISPENSER RECESSED
13. URINAL
14. CHANGING TABLE RECESSED
15. GARBAGE DISP
16. MICROWAVE
17. REFRIDGERATOR
18. COAT HOOK
19. SANITARY NAPKIN DISPENSER
20. SHELF

N
W ROOM E
S

PICO BRANCH LIBRARY

2201 Pico Blvd.
Santa Monica, CA 90404

PROJECT

KoningEizenbergArchitecture
1454 25th St, Santa Monica, CA 90404

310.828.6131 info@kearch.com
310.828.0719 fax www.kearch.com

ARCHITECT'S PROJECT NO.
1001

ARCHITECT

All designs, ideas, arrangements and plans indicated by these drawings are the property and copyright of the Architect and shall neither be used on any other work nor be disclosed to any other person for any use whatsoever without written permission.

Koning Eizenberg Architecture and/or its principals and employees waives any and all liability or responsibility for problems that may occur when these plans, drawings, specifications, and/or designs are followed without the professional's guidance with ambiguities, or conflicts which are alleged.

CONSULTANT

City of Santa Monica
Architecture Services

1437 4TH STREET, SUITE 300
SANTA MONICA, CA 90401
TEL. (310) 458-2205
FAX. (310) 399-1541
architecture@smgov.net

SUBMITTED BY : DATE : 20

APPROVED BY : DATE : 20
Miriam Mulder,
Architecture Services Manager
CITY OF SANTA MONICA
DEPARTMENT OF PUBLIC WORKS

REVIEWED BY : DATE : 20

REVIEWED BY : DATE : 20

REVIEWED BY : DATE : 20

CITY CLIENT

NO.	DATE	BY	DESCRIPTION

REVISIONS

ISSUE
65% CONSTRUCTION DOCUMENTS / BID SET

DATE
01/23/2012

DRAWING NO. **6693**

SHEET OF SHEETS

SHEET TITLE
INTERIOR ELEVATIONS

SHEET NO.
A7.20

SHEET OF

DWG. NO. - -

TITLE OF PROJECT:

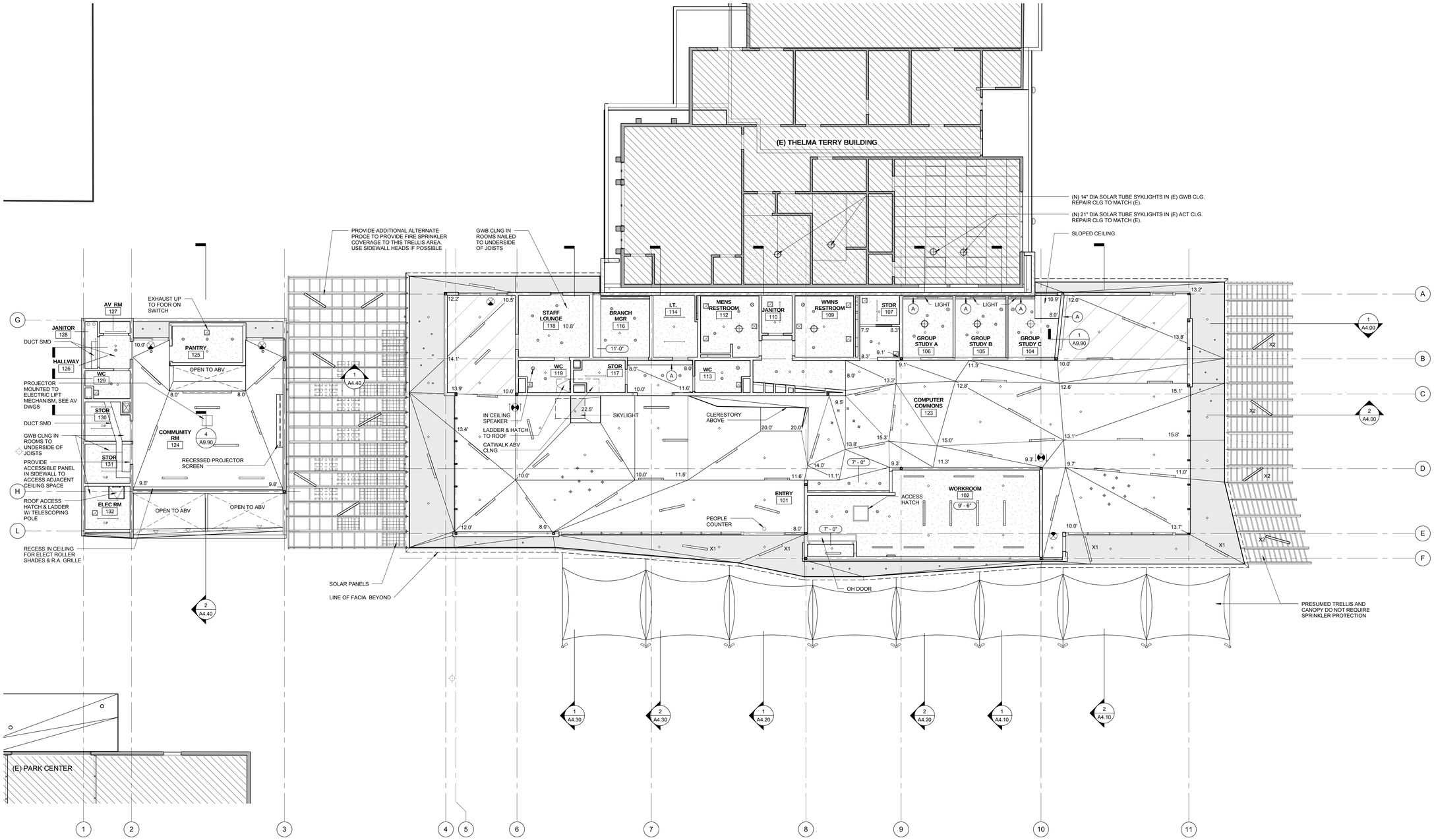

REFLECTED CEILING PLAN

0 2' 4' 8' 1/8" = 1'-0" **2**

FIRE SPRINKLER NOTES

SPRINKLER HEADS INDICATED ARE FOR GUIDANCE FOR DESIGN/ BUILD SUB-CONTRACTOR. SUB-CONTRACTOR TO REVIEW LAYOUT & CEILING CONDITION & DESIGN SYSTEM FOR CODE COMPLIANCE USING THIS LAYOUT AS A GUIDE SYSTEM TO INCLUDE.

NOTE:
ATTIC/ CONCEALED SPACE ABOVE CEILING TO BE SPRINKLERED (COMBUSTIBLE CONSTRUCTION). ALL WOOD STUD WALLS EXTENDING BELOW RAISED ACCESS FLOOR TO BE COVERED WITH SHEET METAL AND OR GWB TO AVOID ANY SPRINKLER REQUIREMENTS BELOW RAISED ACCESS FLOOR.
ALL SPRINKLER HEADS TO BE CONCEALED UNO.

FIRE SPRINKLER LEGEND

- CONCEALED SPRINKLER HEAD
- SIDEWALL SPRINKLER
- P PENDANT SPRINKLER

RCP LEGEND

- RECESSED LINEAR T5 FLUORESCENT DOWNLIGHT W/ 2 LED ACCENT LIGHTS
- RECESSED LINEAR T5 FLUORESCENT DOWNLIGHT
- SURFACE MOUNTED LED UPLIGHT OR DOWNLIGHT
- RECESSED LED DOWNLIGHT
- WALL MOUNTED FIXTURE
- PENDANT MOUNTED T5 FLUORESCENT STRIPLIGHT
- PENDANT MOUNTED COMPACT FLUORESCENT
- SOLAR TUBE
- RECESSED DOWNLIGHT
- REGISTER
- REGISTER
- CEILING SPEAKER

NOTE: SEE ELECTRICAL PLANS AND LIGHTING FIXTURE SCHEDULE FOR CLARIFICATION

REFLECTED CEILING PLAN LEGEND

- GYP WALL BD, PTD
- EXT GYP BD SOFFIT, PTD
- ACOUSTIC PLASTER
- ACOUSTIC PLASTER ON GWB
- TECTUM

REFLECTED CEILING PLAN NOTES

1. ALL CEILINGS 8'-0" UNO TYP.
2. SOLARTUBE SKYLIGHTS (4) TO BE ADDED TO (E) T.T BUILDING. LOCATE BETWEEN (E) ROOF JOISTS (32" OC). LOCATE SO SKYLIGHTS ARE CENTERED ON EXISTING T.T CLASSROOM ACT GRID & AVOID (E) LIGHTS.
3. LOCATE (N) LIGHTS IN RESTROOMS TO AVOID (E) LIGHTS & SOFFIT AREA OF CLG (E) CLG IS GWB @ T.T.

(A) RECESS FOR R.A., SMD

PICO BRANCH LIBRARY

2201 Pico Blvd.
Santa Monica, CA 90404

PROJECT

KoningEizenbergArchitecture
1454 25th St, Santa Monica, CA 90404

310.828.6131 info@kearch.com
310.828.0719 fax www.kearch.com

ARCHITECT'S PROJECT NO.
1001

ARCHITECT

All designs, ideas, arrangements and plans indicated by these drawings are the property and copyright of the Architect and shall neither be used on any other work nor be disclosed to any other person for any use whatsoever without written permission.

Koning Eizenberg Architecture and/or its principals and employees waives any and all liability or responsibility for problems that may occur when these plans, drawings, specifications, and/or designs are followed without the professional's guidance with ambiguities, or conflicts which are alleged.

CONSULTANT

City of Santa Monica Architecture Services
1437 4TH STREET, SUITE 300
SANTA MONICA, CA 90401
TEL. (310) 458-2205
FAX. (310) 399-1541
architecture@smgov.net

DATE : 20
SUBMITTED BY :

DATE : 20
APPROVED BY :
Miriam Mulder,
Architecture Services Manager
CITY OF SANTA MONICA
DEPARTMENT OF PUBLIC WORKS

REVIEWED BY : DATE : 20

REVIEWED BY : DATE : 20

REVIEWED BY : DATE : 20

CITY CLIENT

NO.	DATE	BY	DESCRIPTION

REVISIONS

ISSUE
65% CONSTRUCTION DOCUMENTS / BID SET

DATE
01/23/2012

DRAWING NO. **6693**

SHEET OF SHEETS

SHEET TITLE
REFLECTED CEILING PLAN

SHEET NO.
A8.10

SHEET OF

DWG NO. -

TITLE OF PROJECT

SHEET OF

DWG. NO. - -

MATERIAL ABBREVIATIONS

AGC	ALUMINUM GLAZING CHANNEL
APC	ACOUSTICAL PLASTER CEILING
DF	DRAINAGE FABRIC
DMP	DIMPLED MTL PANEL
FI	FIBERGLASS INSULATION
HW	HARD WOOD
IGU	INSULATED GLASS UNIT
NSB	NEOPRENE SETTING BLOCK
PB	PROTECTION BOARD
PCP	PRE-CAST CONCRETE PLANKS
RAF	RAISED ACCESS FLOOR SYSTEM
RD	ROOF DRAIN
RPU	ROOFING PLYWOOD UNDERLAY
SCP	SMOOTH STEEL TROWLED CEMENT PLASTER
SOG	SLAB ON GRADE
SS	STAINLESS STEEL
TRM	THERMOPLASTIC ROOFING MATERIAL
VB	VAPOR BARRIER
WOM	WALLK OFF MAT
WP	WATERPROOFING

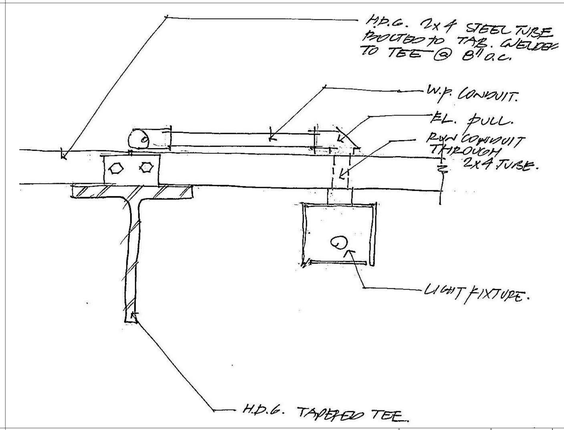

LIGHTS @ EAST TRELLIS | N.T.S. | 3

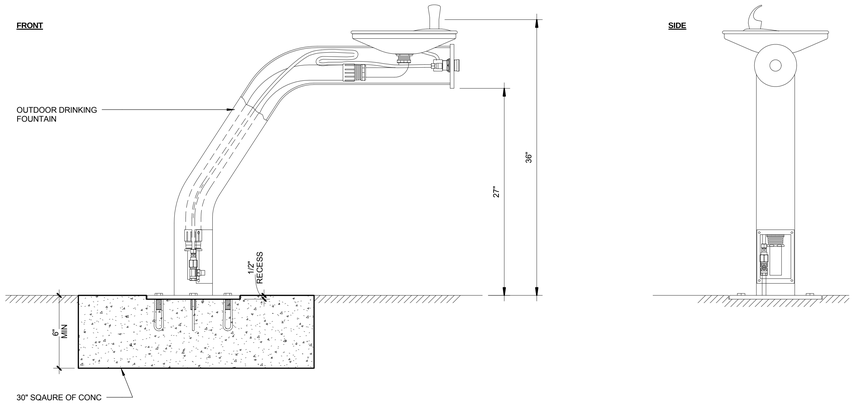

DRINKING FOUNTAIN | 0 1" 2" 4" | 1 1/2" = 1'-0" | 2

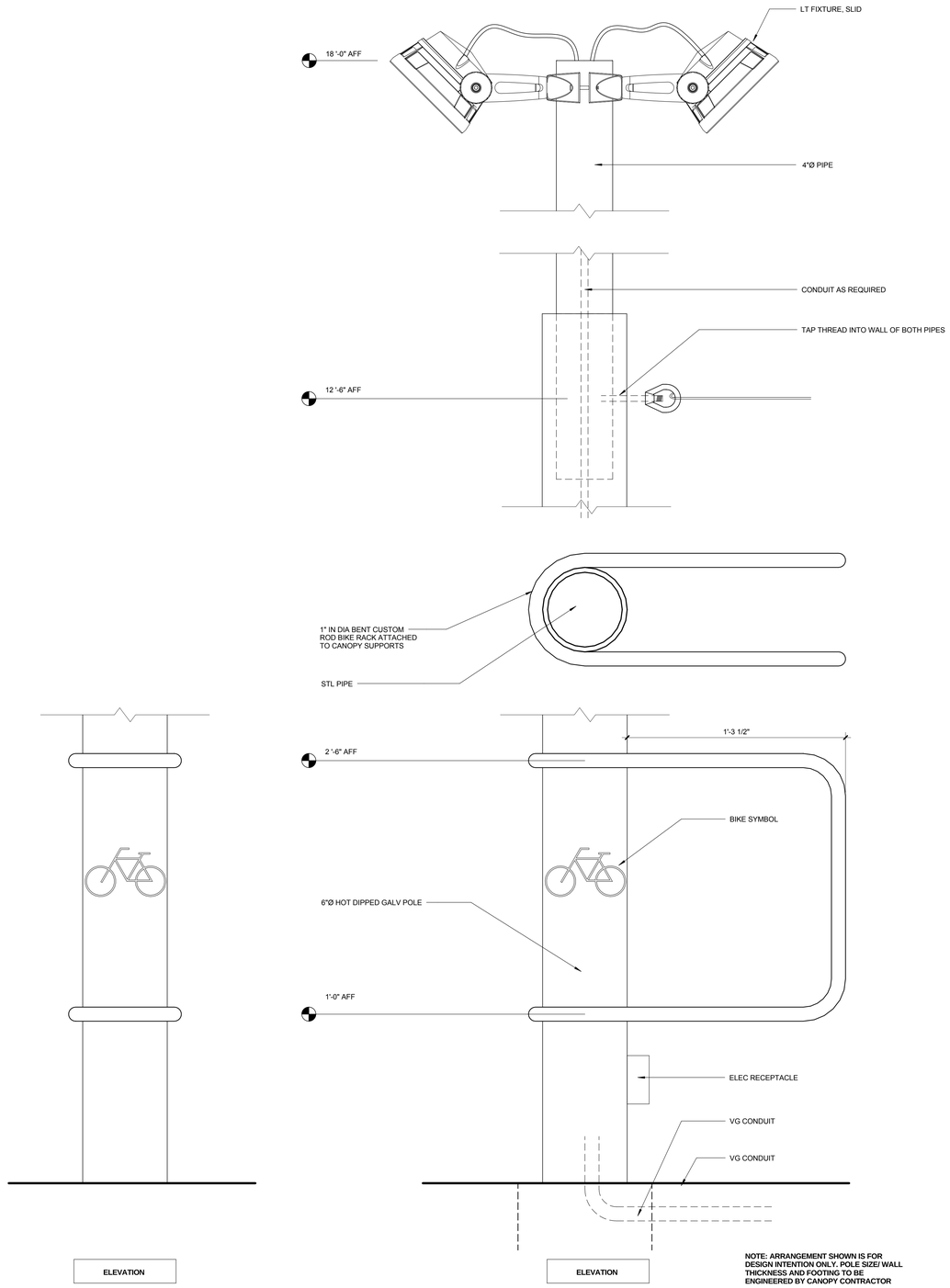

NOTE: ARRANGEMENT SHOWN IS FOR DESIGN INTENTION ONLY. POLE SIZE/ WALL THICKNESS AND FOOTING TO BE ENGINEERED BY CANOPY CONTRACTOR

BIKE POLE | 0 1" 2" 4" | 3" = 1'-0" | 1

PICO BRANCH LIBRARY

2201 Pico Blvd.
Santa Monica, CA 90404

PROJECT

KoningEizenbergArchitecture
1454 25th St, Santa Monica, CA 90404

310.828.6131 info@kearch.com
310.828.0719 fax www.kearch.com

ARCHITECT'S PROJECT NO.
1001

ARCHITECT

All designs, ideas, arrangements and plans indicated by these drawings are the property and copyright of the Architect and shall neither be used on any other work nor be disclosed to any other person for any use whatsoever without written permission.

Koning Eizenberg Architecture and/or its principals and employees waives any and all liability or responsibility for problems that may occur when these plans, drawings, specifications, and/or designs are followed without the professional's guidance with ambiguities, or conflicts which are alleged.

CONSULTANT

City of Santa Monica Architecture Services

1437 4TH STREET, SUITE 300
SANTA MONICA, CA 90401
TEL. (310) 458-2205
FAX. (310) 399-1541
architecture@smgov.net

SUBMITTED BY : DATE : _____ 20 __

APPROVED BY : DATE : _____ 20 __
Miriam Mulder,
Architecture Services Manager

CITY OF SANTA MONICA
DEPARTMENT OF PUBLIC WORKS

REVIEWED BY : DATE : _____ 20 __

REVIEWED BY : DATE : _____ 20 __

REVIEWED BY : DATE : _____ 20 __

CITY CLIENT

NO.	DATE	BY	DESCRIPTION

REVISIONS

ISSUE
65% CONSTRUCTION DOCUMENTS / BID SET

DATE
01/23/2012

DRAWING NO. **6693**

SHEET OF SHEETS

SHEET TITLE
SITE DETAILS

SHEET NO.
A9.00

TITLE OF PROJECT:

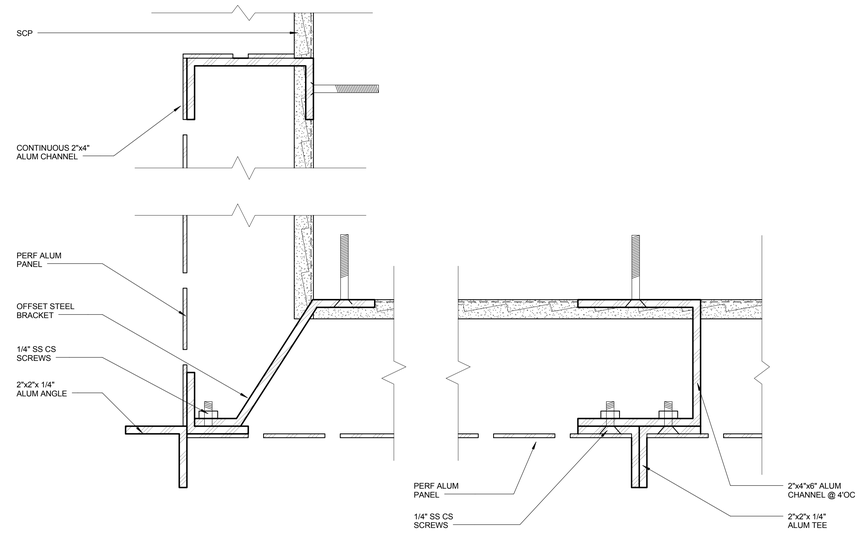

STANDOFF @ PERF SCREEN | 0 1/2" 1" 2" | 6" = 1'-0" | 9

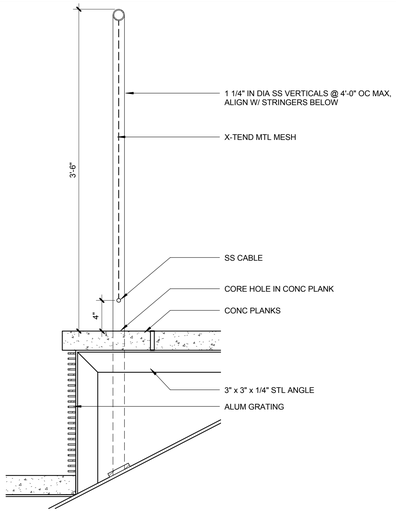

GUARDRAIL @ COMMUNITY RM | 0 2" 4" 6" 8" | 1 1/2" = 1'-0" | 11

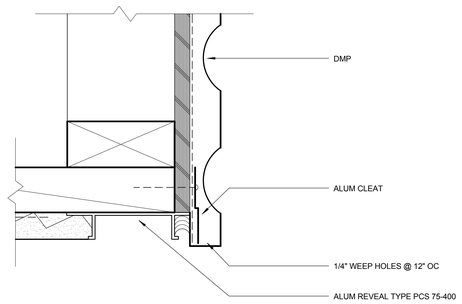

SOFFIT @ MTL PANEL | 0 1/2" 1" 2" | 6" = 1'-0" | 8

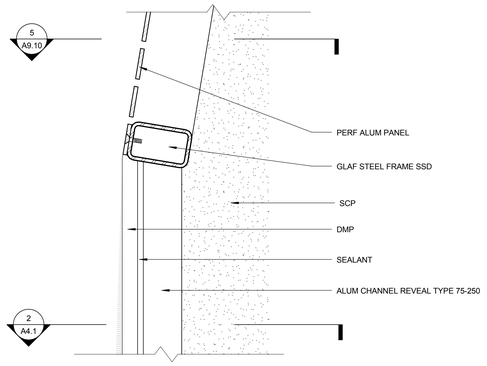

PERF SCREEN DETAIL @ COMMUNITY RM | 0 1" 2" 4" | 3" = 1'-0" | 6

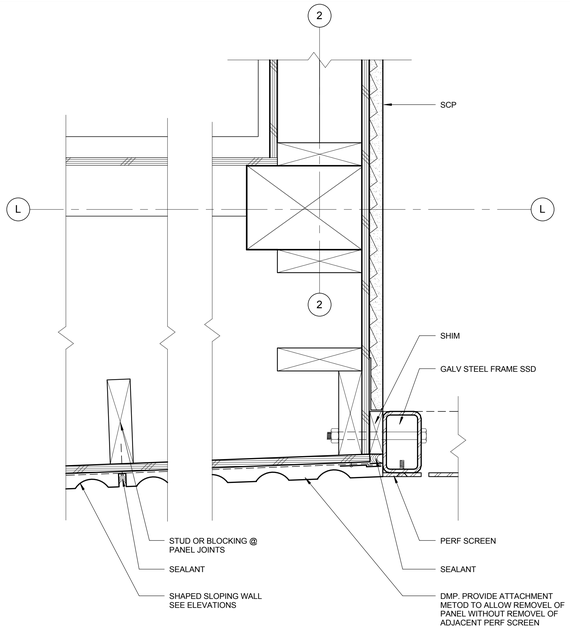

DIMPLED PANEL TRANSITION TO PERF | 0 1" 2" 4" | 3" = 1'-0" | 5

MATERIAL ABBREVIATIONS

AGC	ALUMINUM GLAZING CHANNEL
APC	ACOUSTICAL PLASTER CEILING
DF	DRAINAGE FABRIC
DMP	DIMPLED MTL PANEL
FI	FIBERGLASS INSULATION
HW	HARD WOOD
IGU	INSULATED GLASS UNIT
NSB	NEOPRENE SETTING BLOCK
PB	PROTECTION BOARD
PCP	PRE-CAST CONCRETE PLANKS
RAF	RAISED ACCESS FLOOR SYSTEM
RD	ROOF DRAIN
RPU	ROOFING PLYWOOD UNDERLAY
SCP	SMOOTH STEEL TROWLED CEMENT PLASTER
SOG	SLAB ON GRADE
SS	STAINLESS STEEL
TRM	THERMOPLASTIC ROOFING MATERIAL
VB	VAPOR BARRIER
WOM	WALLK OFF MAT
WP	WATERPROOFING

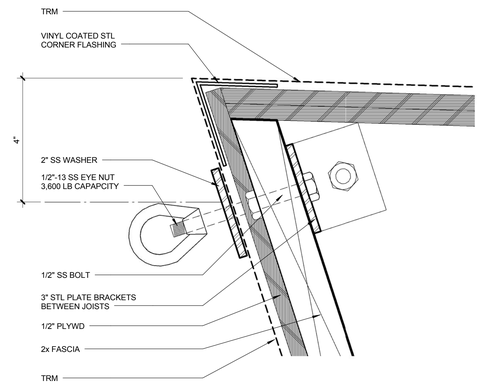

CANOPY @ FASCIA | 0 1/2" 1" 2" | 6" = 1'-0" | 3

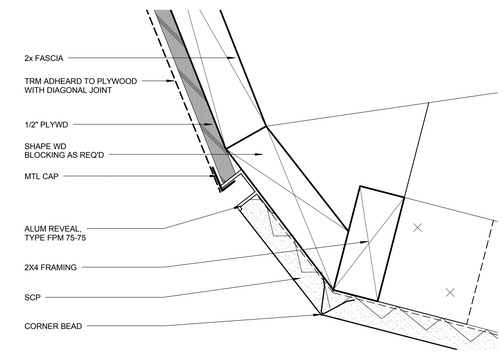

FASCIA @ SOFFIT | 0 1/2" 1" 2" | 6" = 1'-0" | 2

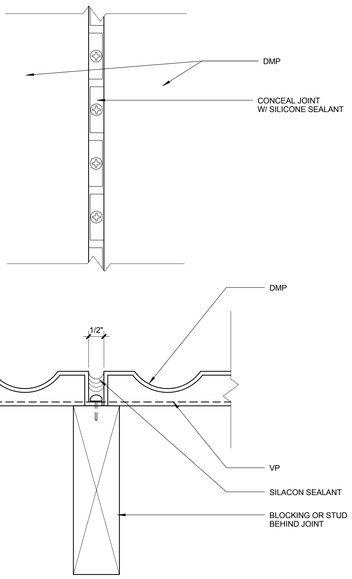

MTL PANEL ZIPPER JOINT | 0 1/2" 1" 2" | 6" = 1'-0" | 10

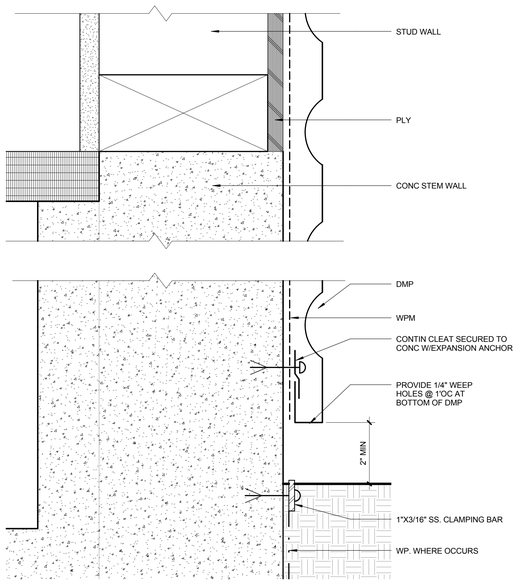

MTL PANEL | 0 1/2" 1" 2" | 6" = 1'-0" | 7

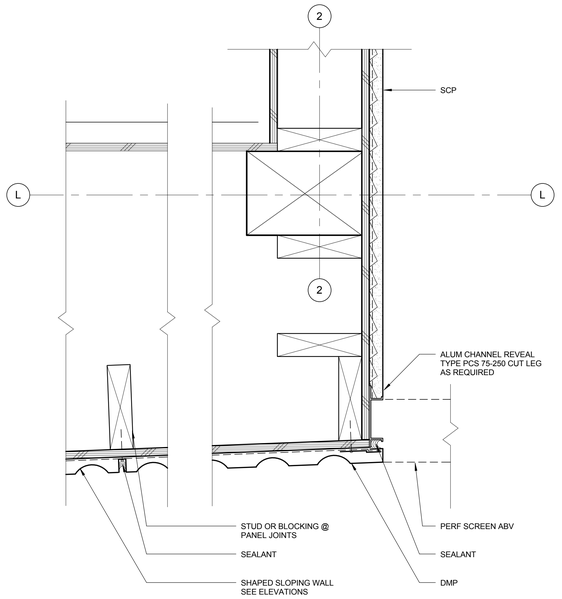

DIMPLED PANEL TRANSITION TO STUCCO | 0 1" 2" 4" | 3" = 1'-0" | 4

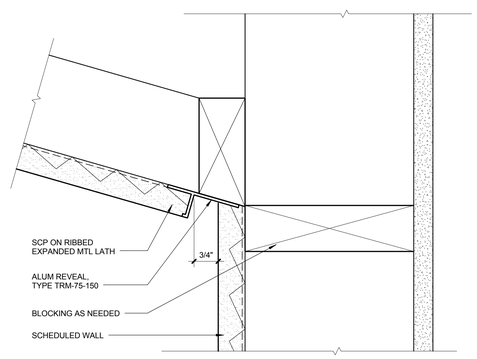

SOFFIT @ WALL | 0 1/2" 1" 2" | 6" = 1'-0" | 1

PICO BRANCH LIBRARY

2201 Pico Blvd.
Santa Monica, CA 90404

PROJECT

KoningEizenbergArchitecture
1454 25th St, Santa Monica, CA 90404

310.828.6131 info@kearch.com
310.828.0719 fax www.kearch.com

ARCHITECT'S PROJECT NO.
1001

ARCHITECT

All designs, ideas, arrangements and plans indicated by these drawings are the property and copyright of the Architect and shall neither be used on any other work nor be disclosed to any other person for any use whatsoever without written permission.

Koning Eizenberg Architecture and/or its principals and employees waives any and all liability or responsibility for problems that may occur when these plans, drawings, specifications, and/or designs are followed without the professional's guidance with ambiguities, or conflicts which are alleged.

CONSULTANT

City of Santa Monica Architecture Services
1437 4TH STREET, SUITE 300
SANTA MONICA, CA 90401
TEL. (310) 458-2205
FAX. (310) 399-1541
architecture@smgov.net

SUBMITTED BY : DATE : 20

APPROVED BY : Miriam Mulder, Architecture Services Manager DATE : 20

CITY OF SANTA MONICA
DEPARTMENT OF PUBLIC WORKS

REVIEWED BY : DATE : 20

REVIEWED BY : DATE : 20

REVIEWED BY : DATE : 20

CITY CLIENT

NO.	DATE	BY	DESCRIPTION

REVISIONS

ISSUE
65% CONSTRUCTION DOCUMENTS / BID SET

DATE
01/23/2012

DRAWING NO. **6693**

SHEET OF SHEETS

SHEET TITLE
EXTERIOR DETAILS

SHEET NO.
A9.10

SHEET OF

DWG NO. -

TITLE OF PROJECT:

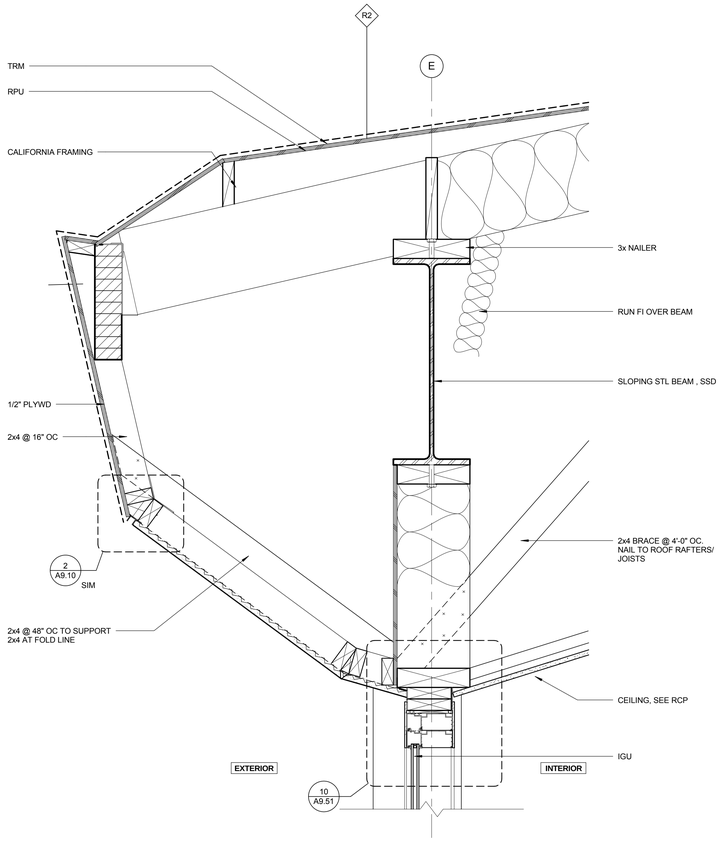

ROOF @ CHILDRENS LIBRARY 0 2" 4" 6" 8" 1 1/2" = 1'-0" 6

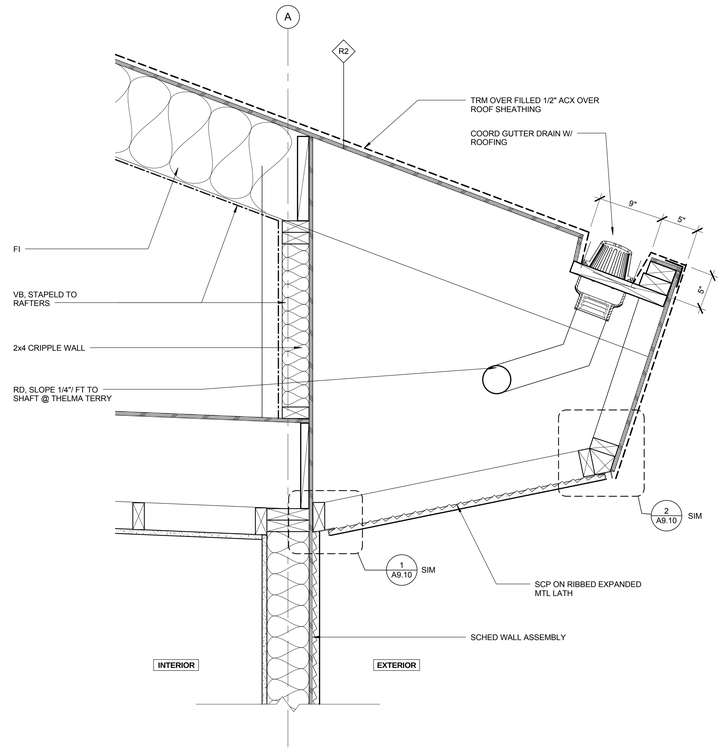

ROOF @ STAFF LOUNGE 0 2" 4" 6" 8" 1 1/2" = 1'-0" 4

MATERIAL ABBREVIATIONS

AGC	ALUMINUM GLAZING CHANNEL
APC	ACOUSTICAL PLASTER CEILING
DF	DRAINAGE FABRIC
DMP	DIMPLED MTL PANEL
FI	FIBERGLASS INSULATION
HW	HARD WOOD
IGU	INSULATED GLASS UNIT
NSB	NEOPRENE SETTING BLOCK
PB	PROTECTION BOARD
PCP	PRE-CAST CONCRETE PLANKS
RAF	RAISED ACCESS FLOOR SYSTEM
RD	ROOF DRAIN
RPU	ROOFING PLYWOOD UNDERLAY
SCP	SMOOTH STEEL TROWLED CEMENT PLASTER
SOG	SLAB ON GRADE
SS	STAINLESS STEEL
TRM	THERMOPLASTIC ROOFING MATERIAL
VB	VAPOR BARRIER
WOM	WALLK OFF MAT
WP	WATERPROOFING

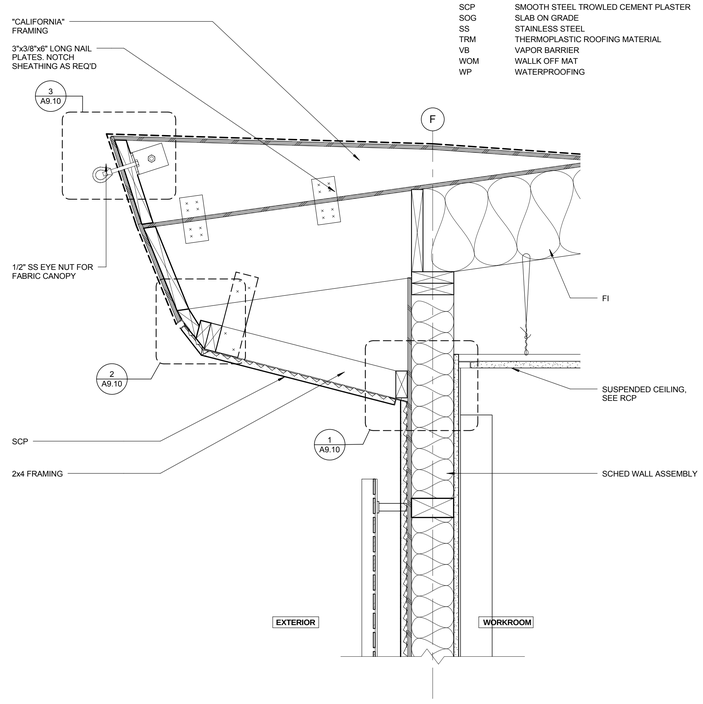

ROOF @ WORK ROOM 0 2" 4" 6" 8" 1 1/2" = 1'-0" 2

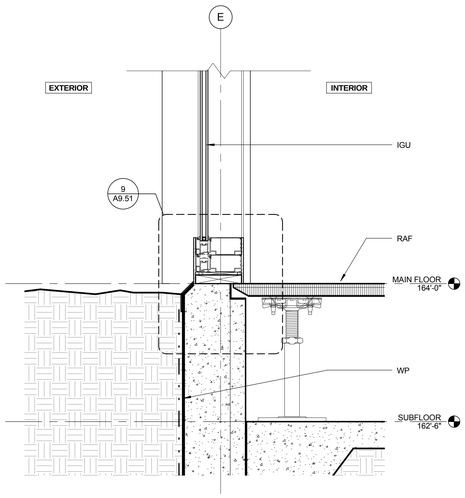

GLAZING @ RAISED FLOOR 0 2" 4" 6" 8" 1 1/2" = 1'-0" 5

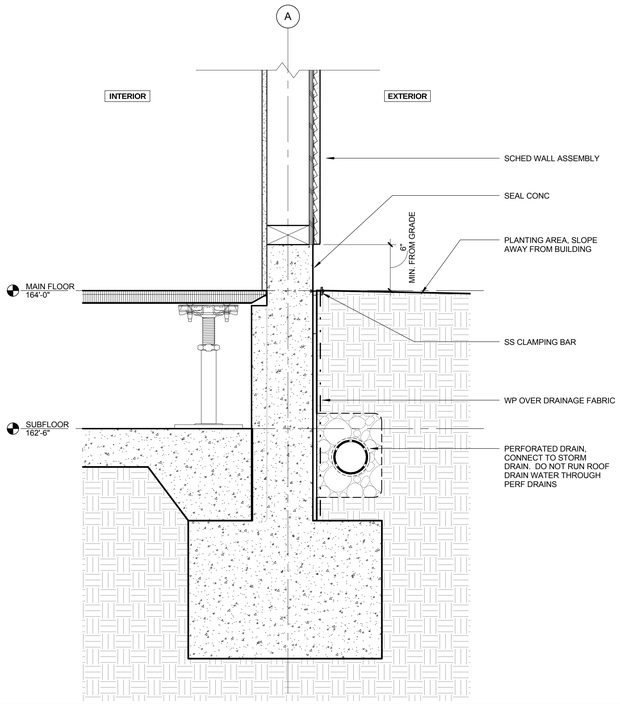

FLOOR @ STAFF LOUNGE 0 2" 4" 6" 8" 1 1/2" = 1'-0" 3

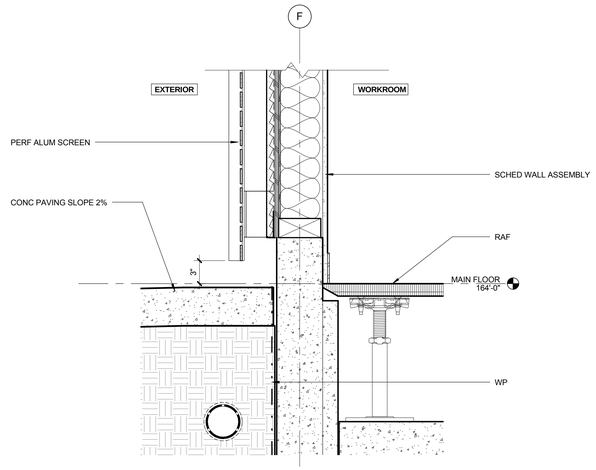

FLOOR @ WORK ROOM 0 2" 4" 6" 8" 1 1/2" = 1'-0" 1

PICO BRANCH LIBRARY

2201 Pico Blvd.
Santa Monica, CA 90404

PROJECT

KoningEizenbergArchitecture
1454 25th St, Santa Monica, CA 90404

310.828.6131 info@kearch.com
310.828.0719 fax www.kearch.com

ARCHITECT'S PROJECT NO.
1001

ARCHITECT

All designs, ideas, arrangements and plans indicated by these drawings are the property and copyright of the Architect and shall neither be used on any other work nor be disclosed to any other person for any use whatsoever without written permission.

Koning Eizenberg Architecture and/or its principals and employees waives any and all liability or responsibility for problems that may occur when these plans, drawings, specifications, and/or designs are followed without the professional's guidance with ambiguities, or conflicts which are alleged.

CONSULTANT

City of Santa Monica Architecture Services

1437 4TH STREET, SUITE 300
SANTA MONICA, CA 90401
TEL. (310) 458-2205
FAX. (310) 399-1541
architecture@smgov.net

SUBMITTED BY : DATE : 20

APPROVED BY : DATE : 20
Miriam Mulder,
Architecture Services Manager

CITY OF SANTA MONICA
DEPARTMENT OF PUBLIC WORKS

REVIEWED BY : DATE : 20

REVIEWED BY : DATE : 20

REVIEWED BY : DATE : 20

CITY CLIENT

NO.	DATE	BY	DESCRIPTION

REVISIONS

ISSUE
65% CONSTRUCTION DOCUMENTS / BID SET

DATE
01/23/2012

DRAWING NO. **6693**

SHEET OF SHEETS

SHEET TITLE
WALL/ ROOF/ FLOOR DETAILS

SHEET NO.
A9.20

SHEET OF

DWG. NO. -

TITLE OF PROJECT:

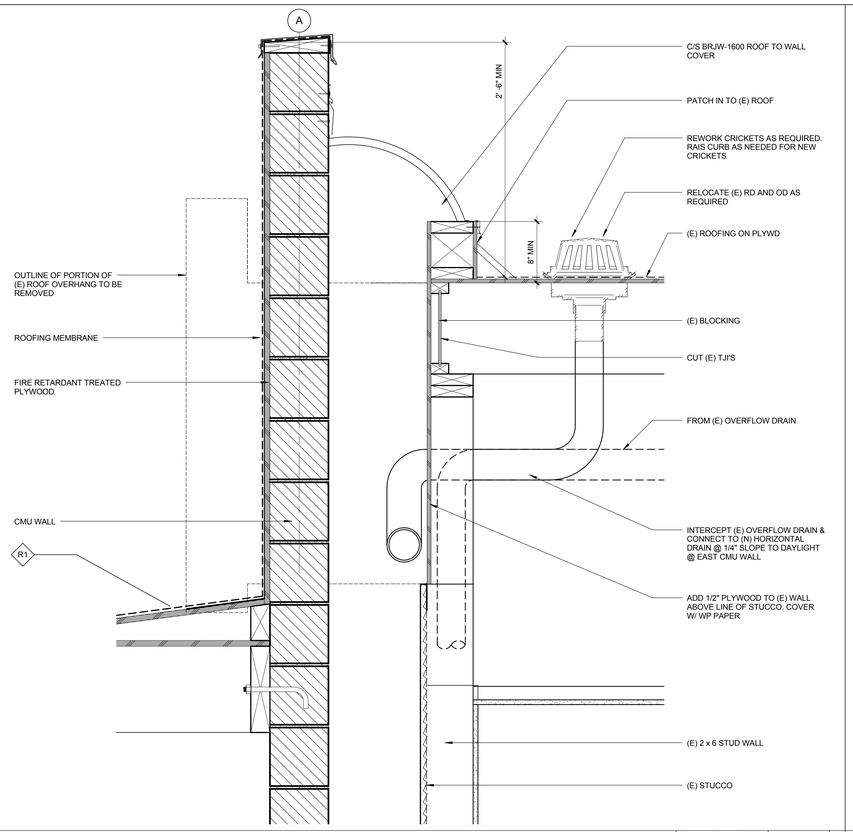

PARAPET @ THELMA TERRY 0 2" 4" 6" 8" 1 1/2" = 1'-0" **6**

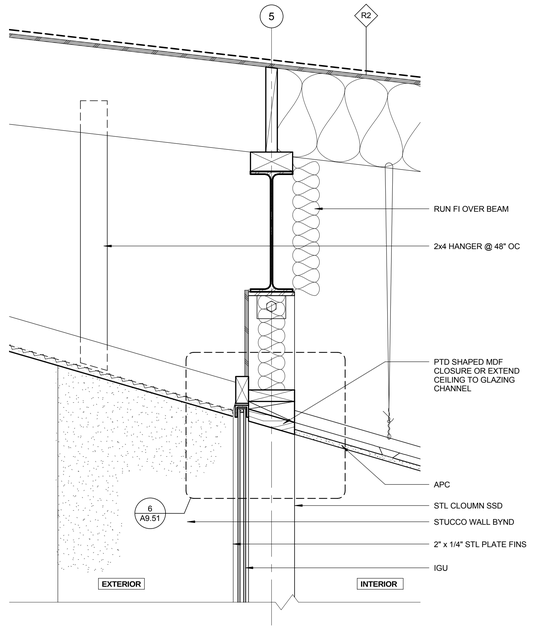

GLAZING HEAD @ WEST LIBRARY1 0 2" 4" 6" 8" 1 1/2" = 1'-0" **4**

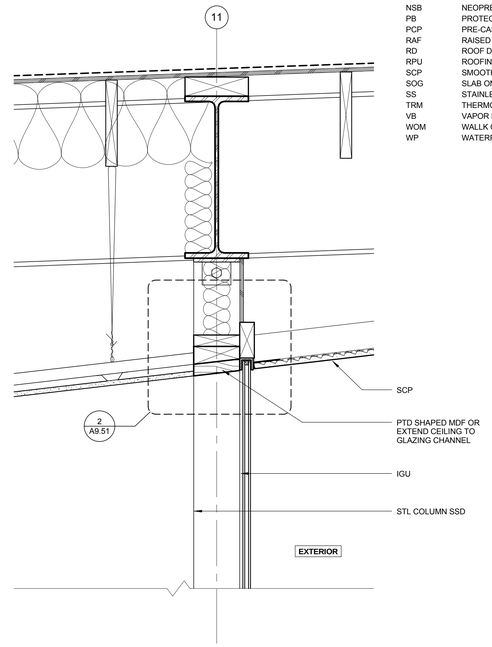

GLAZING HEAD @ EAST LIBRARY 0 2" 4" 6" 8" 1 1/2" = 1'-0" **2**

MATERIAL ABBREVIATIONS

AGC	ALUMINUM GLAZING CHANNEL
APC	ACOUSTICAL PLASTER CEILING
DF	DRAINAGE FABRIC
DMP	DIMPLED MTL PANEL
FI	FIBERGLASS INSULATION
HW	HARD WOOD
IGU	INSULATED GLASS UNIT
NSB	NEOPRENE SETTING BLOCK
PB	PROTECTION BOARD
PCP	PRE-CAST CONCRETE PLANKS
RAF	RAISED ACCESS FLOOR SYSTEM
RD	ROOF DRAIN
RPU	ROOFING PLYWOOD UNDERLAY
SCP	SMOOTH STEEL TROWLED CEMENT PLASTER
SOG	SLAB ON GRADE
SS	STAINLESS STEEL
TRM	THERMOPLASTIC ROOFING MATERIAL
VB	VAPOR BARRIER
WOM	WALLK OFF MAT
WP	WATERPROOFING

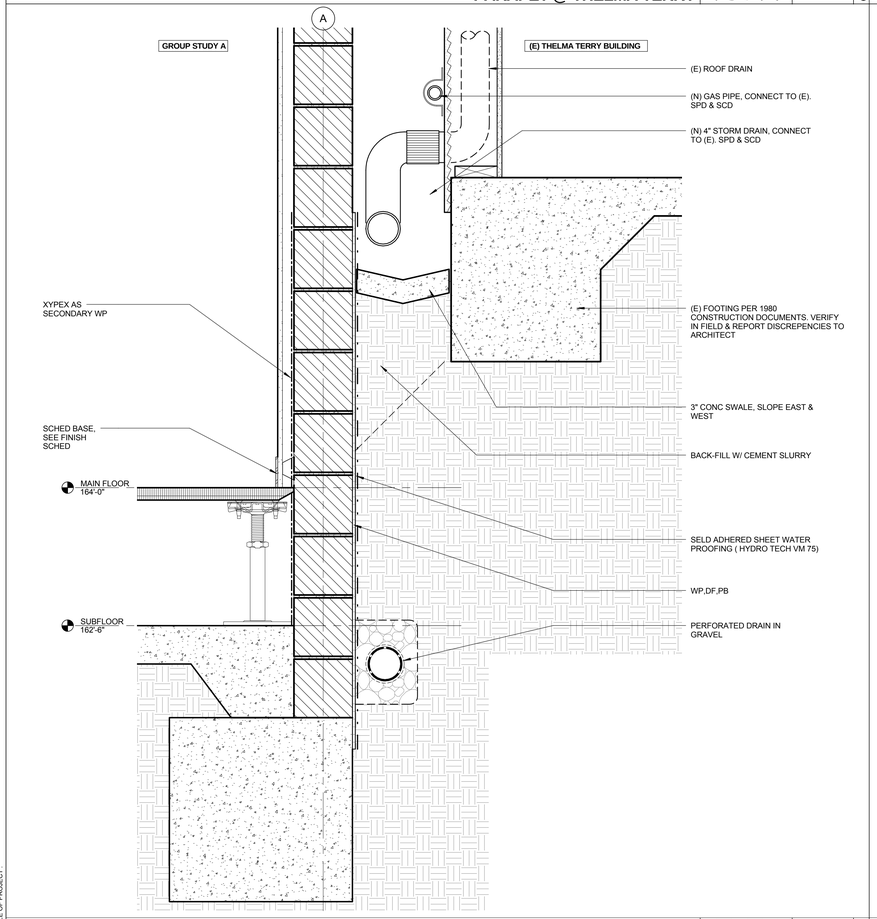

FLOOR @ THELMA TERRY 0 2" 4" 6" 8" 1 1/2" = 1'-0" **5**

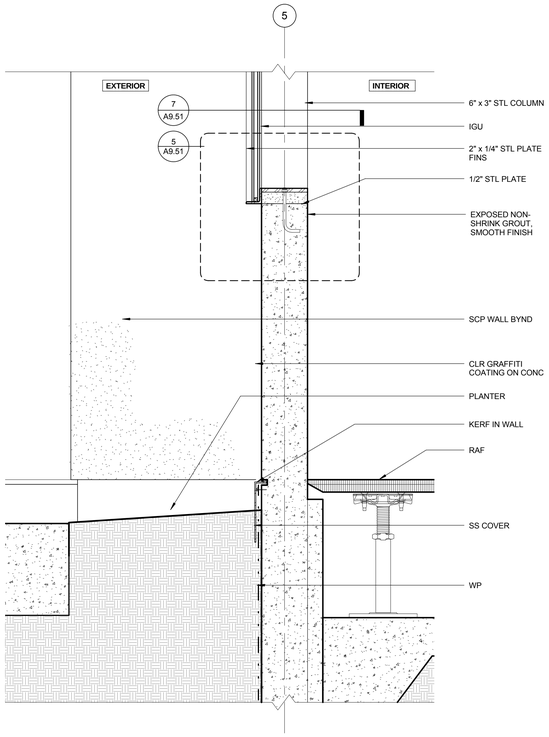

GLAZING SILL @ WEST LIBRARY 0 2" 4" 6" 8" 1 1/2" = 1'-0" **3**

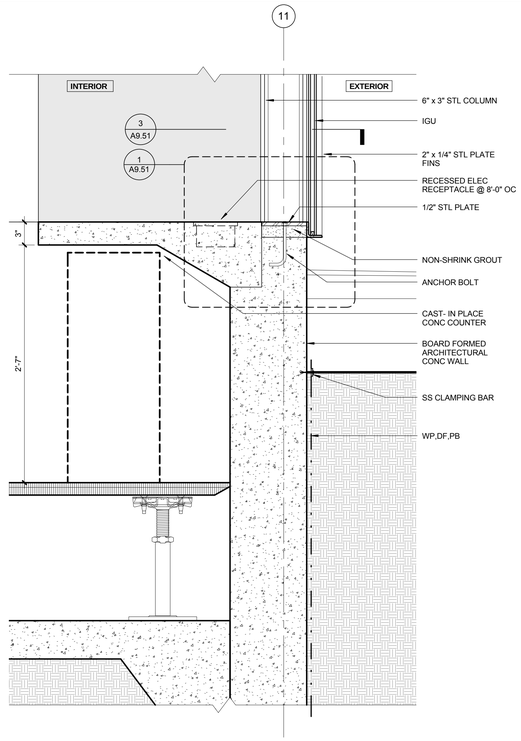

CONC COUNTER @ GLAZING 0 2" 4" 6" 8" 1 1/2" = 1'-0" **1**

PICO BRANCH LIBRARY

2201 Pico Blvd.
Santa Monica, CA 90404

PROJECT

KoningEizenbergArchitecture
1454 25th St, Santa Monica, CA 90404

310.828.6131 info@kearch.com
310.828.0719 fax www.kearch.com

ARCHITECT'S PROJECT NO.
1001

ARCHITECT

All designs, ideas, arrangements and plans indicated by these drawings are the property and copyright of the Architect and shall neither be used on any other work nor be disclosed to any other person for any use whatsoever without written permission.

Koning Eizenberg Architecture and/or its principals and employees waives any and all liability or responsibility for problems that may occur when these plans, drawings, specifications, and/or designs are followed without the professional's guidance with ambiguities, or conflicts which are alleged.

CONSULTANT

City of Santa Monica Architecture Services

1437 4TH STREET, SUITE 300
SANTA MONICA, CA 90401
TEL. (310) 458-2205
FAX. (310) 399-1541
architecture@smgov.net

SUBMITTED BY : DATE : 20

APPROVED BY : DATE : 20
Miriam Mulder,
Architecture Services Manager

CITY OF SANTA MONICA
DEPARTMENT OF PUBLIC WORKS

REVIEWED BY : DATE : 20

REVIEWED BY : DATE : 20

REVIEWED BY : DATE : 20

CITY CLIENT

NO.	DATE	BY	DESCRIPTION

REVISIONS

ISSUE
65% CONSTRUCTION DOCUMENTS / BID SET

DATE
01/23/2012

DRAWING NO. **6693**

SHEET OF SHEETS

SHEET TITLE
WALL / ROOF/
FLOOR DETAILS

SHEET NO.
A9.21

SHEET OF

DWG NO. -

TITLE OF PROJECT :

SHEET OF

DWG NO. -

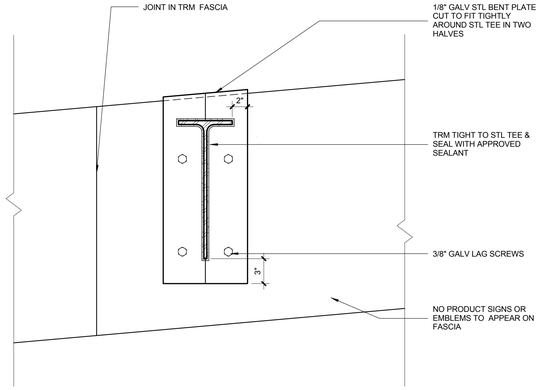

FASCIA @ TRELLIS TEES | 0 2" 4" 6" 8" | 1 1/2" = 1'-0" | 7

MATERIAL ABBREVIATIONS

AGC	ALUMINUM GLAZING CHANNEL
APC	ACOUSTICAL PLASTER CEILING
DF	DRAINAGE FABRIC
DMP	DIMPLED MTL PANEL
FI	FIBERGLASS INSULATION
HW	HARD WOOD
IGU	INSULATED GLASS UNIT
NSB	NEOPRENE SETTING BLOCK
PB	PROTECTION BOARD
PCP	PRE-CAST CONCRETE PLANKS
RAF	RAISED ACCESS FLOOR SYSTEM
RD	ROOF DRAIN
RPU	ROOFING PLYWOOD UNDERLAY
SCP	SMOOTH STEEL TROWLED CEMENT PLASTER
SOG	SLAB ON GRADE
SS	STAINLESS STEEL
TRM	THERMOPLASTIC ROOFING MATERIAL
VB	VAPOR BARRIER
WOM	WALLK OFF MAT
WP	WATERPROOFING

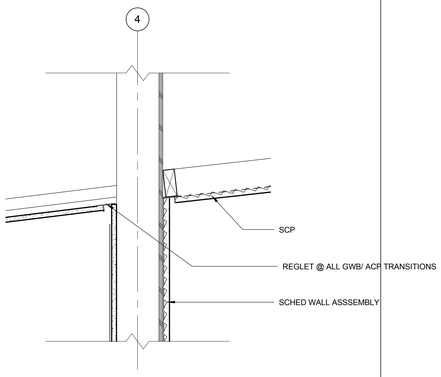

GWB @ CEILING | 0 2" 4" 6" 8" | 1 1/2" = 1'-0" | 12

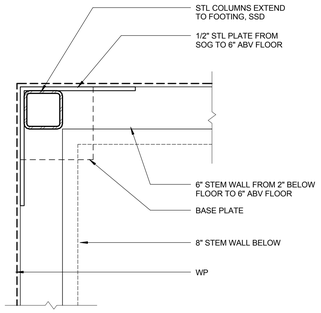

TYP. STL COLUMN @ STEM WALL | 0 2" 4" 6" 8" | 1 1/2" = 1'-0" | 10

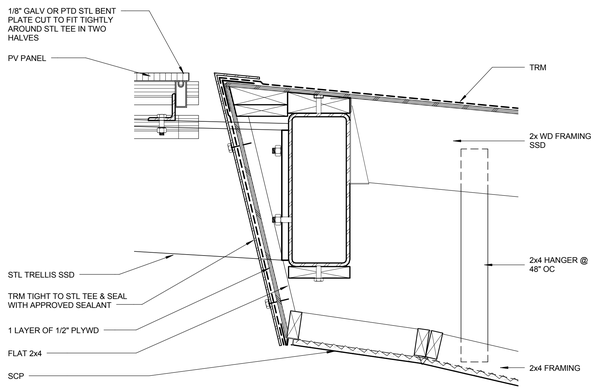

TRELLIS @ WEST LIBRARY | 0 2" 4" 6" 8" | 1 1/2" = 1'-0" | 6

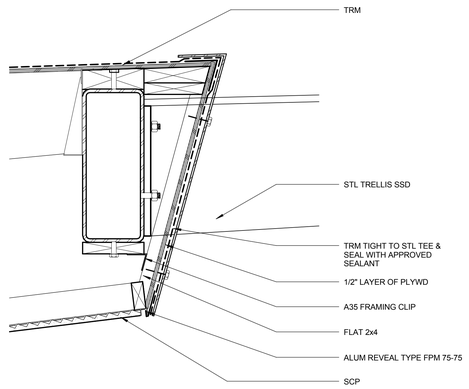

TRELLIS @ EAST LIBRARY | 0 2" 4" 6" 8" | 1 1/2" = 1'-0" | 3

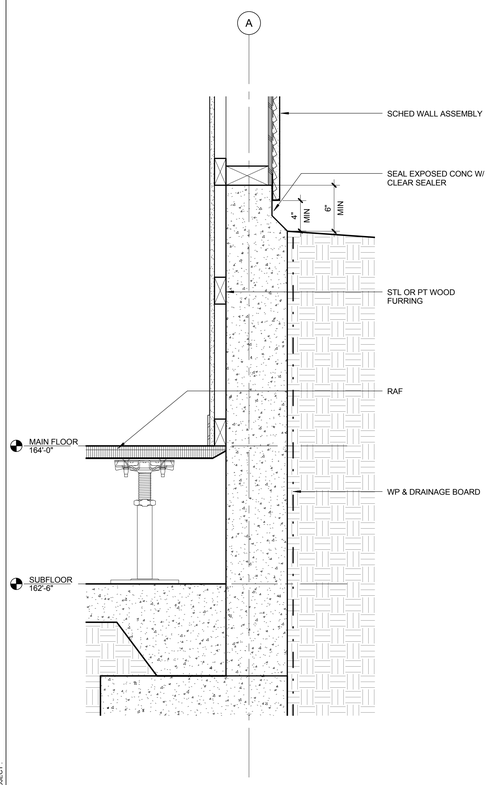

FLOOR @ COLLECTION | 0 2" 4" 6" 8" | 1 1/2" = 1'-0" | 11

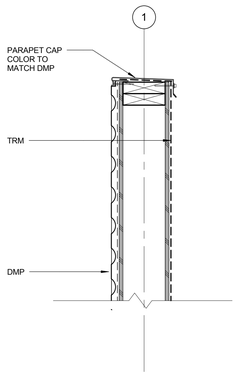

PARAPET @ WEST COMMUNITY RM | 0 2" 4" 6" 8" | 1 1/2" = 1'-0" | 9

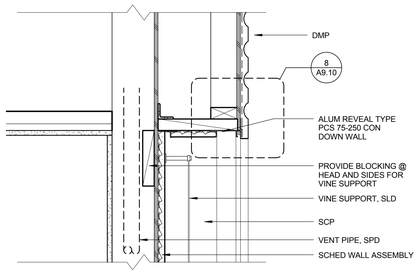

WALL @ NORTH COMMUNITY RM | 0 2" 4" 6" 8" | 1 1/2" = 1'-0" | 5

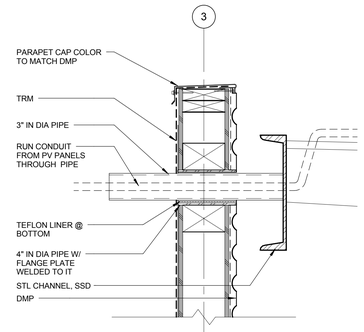

TRELLIS @ EAST COMMUNITY RM | 0 2" 4" 6" 8" | 1 1/2" = 1'-0" | 2

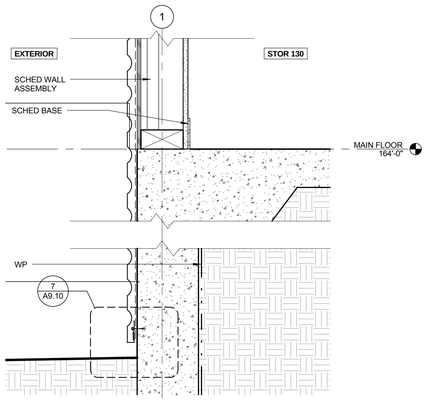

FLOOR @ WEST COMMUNITY RM | 0 2" 4" 6" 8" | 1 1/2" = 1'-0" | 8

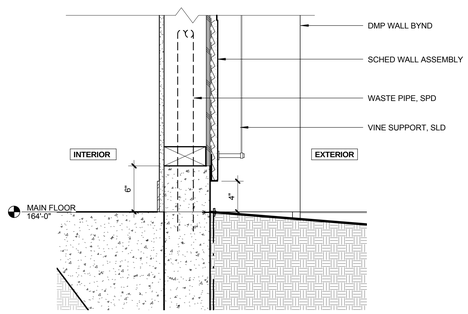

FLOOR @ NORTH COMMUNITY RM | 0 2" 4" 6" 8" | 1 1/2" = 1'-0" | 4

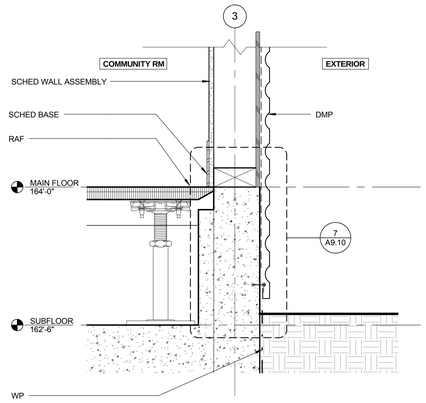

FLOOR @ EAST COMMUNITY RM | 0 2" 4" 6" 8" | 1 1/2" = 1'-0" | 1

TITLE OF PROJECT:

PICO BRANCH LIBRARY

2201 Pico Blvd.
Santa Monica, CA 90404

PROJECT

KoningEizenbergArchitecture
1454 25th St, Santa Monica, CA 90404

310.828.6131 info@kearch.com
310.828.0719 fax www.kearch.com

ARCHITECT'S PROJECT NO.
1001

ARCHITECT

All designs, ideas, arrangements and plans indicated by these drawings are the property and copyright of the Architect and shall neither be used on any other work nor be disclosed to any other person for any use whatsoever without written permission.

Koning Eizenberg Architecture and/or its principals and employees waives any and all liability or responsibility for problems that may occur when these plans, drawings, specifications, and/or designs are followed without the professional's guidance with ambiguities, or conflicts which are alleged.

CONSULTANT

City of Santa Monica Architecture Services

1437 4TH STREET, SUITE 300
SANTA MONICA, CA 90401
TEL. (310) 458-2205
FAX. (310) 399-1541
architecture@smgov.net

SUBMITTED BY: DATE: ____ 20__

APPROVED BY: DATE: ____ 20__
Miriam Mulder,
Architecture Services Manager
CITY OF SANTA MONICA
DEPARTMENT OF PUBLIC WORKS

REVIEWED BY: DATE: ____ 20__

REVIEWED BY: DATE: ____ 20__

REVIEWED BY: DATE: ____ 20__

CITY CLIENT

NO.	DATE	BY	DESCRIPTION

REVISIONS

ISSUE
65% CONSTRUCTION DOCUMENTS / BID SET

DATE
01/23/2012

DRAWING NO. **6693**

SHEET OF SHEETS

SHEET TITLE
WALL/ ROOF/
FLOOR DETAILS

SHEET NO.
A9.22

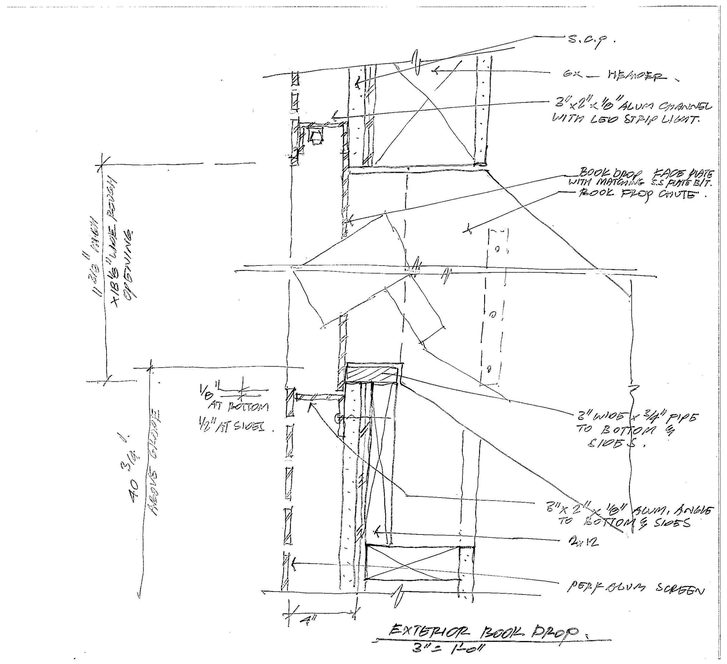

EXTERIOR BOOK DROP.
3" = 1'-0"

BOOK DROP OFF | 1

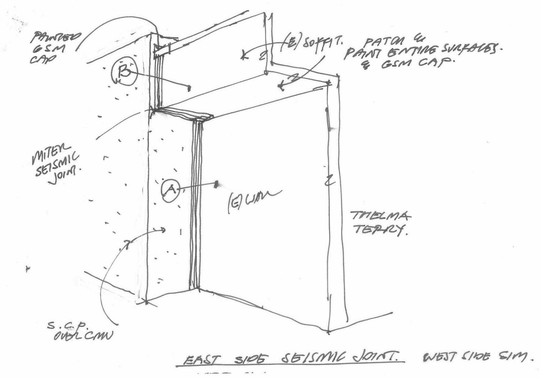

EAST SIDE SEISMIC JOINT. WEST SIDE SIM.

SEISMIC JOINT DETAILS N.T.S.

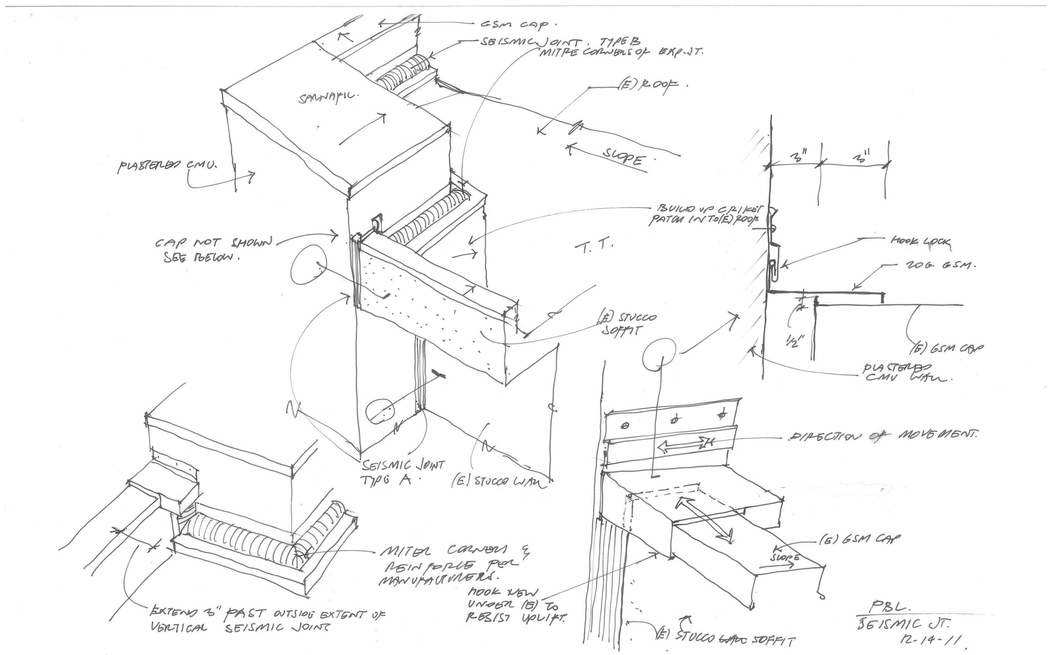

PBL.
SEISMIC JT.
12-14-11.

SEISMIC JOINT DETAILS N.T.S.

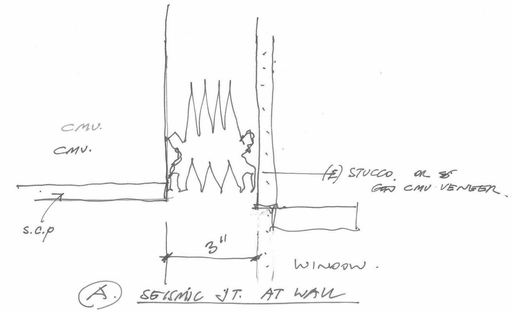

(A) SEISMIC JT. AT WALL

SEISMIC JOINT DETAILS N.T.S.

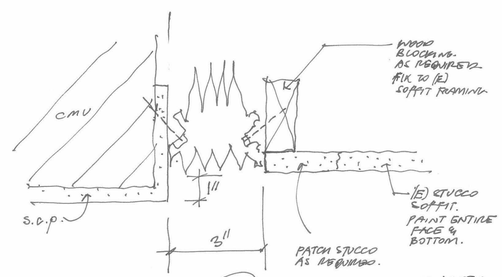

~~WEST SIDE~~ (B) SEISMIC JT. AT SOFFIT FACE.

SEISMIC JOINT DETAILS N.T.S.

SHEET OF

DWG NO.

TITLE OF PROJECT

PICO BRANCH LIBRARY

2201 Pico Blvd.
Santa Monica, CA 90404

PROJECT

KoningEizenbergArchitecture
1454 29th St, Santa Monica, CA 90404

310.828.6131 info@kearch.com
310.828.0719 fax www.kearch.com

ARCHITECT'S PROJECT NO.
1001

ARCHITECT

All designs, ideas, arrangements and plans indicated by these drawings are the property and copyright of the Architect and shall neither be used on any other work nor be disclosed to any other person for any use whatsoever without written permission.

Koning Eizenberg Architecture and/or its principals and employees waives any and all liability or responsibility for problems that may occur when these plans, drawings, specifications, and/or designs are followed without the professional's guidance with ambiguities, or conflicts which are alleged.

CONSULTANT

City of Santa Monica Architecture Services

1437 4TH STREET, SUITE 300
SANTA MONICA, CA 90401
TEL. (310) 458-2205
FAX. (310) 399-1541
architecture@smgov.net

SUBMITTED BY: DATE: ____ 20__

APPROVED BY: DATE: ____ 20__
Miriam Mulder,
Architecture Services Manager
CITY OF SANTA MONICA
DEPARTMENT OF PUBLIC WORKS

REVIEWED BY: DATE: ____ 20__

REVIEWED BY: DATE: ____ 20__

REVIEWED BY: DATE: ____ 20__

CITY CLIENT

NO.	DATE	BY	DESCRIPTION

REVISIONS

ISSUE
65% CONSTRUCTION DOCUMENTS / BID SET

DATE
01/23/2012

DRAWING NO. **6693**

SHEET OF SHEETS

SHEET TITLE
WALL / ROOF/ FLOOR DETAILS

SHEET NO.
A9.23

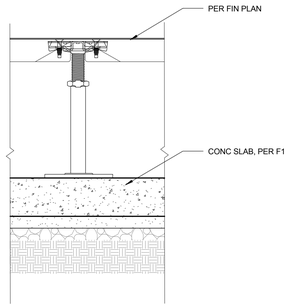

F2	CONC	-	-	-	-	
TYPE	STRUCTURE	FIRE RATING	IIC RATING	STC RATING	INSUL. TYPE	APPROVAL/REMARKS

RAISED ACCESS F2

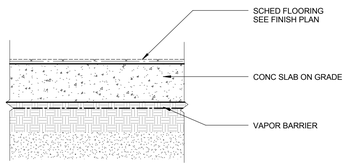

F1A	CONC					
F1	CONC	N/A	N/A	N/A	N/A	
TYPE	STRUCTURE	FIRE RATING	IIC RATING	STC RATING	INSUL. TYPE	APPROVAL/REMARKS

SLAB ON GRADE F1

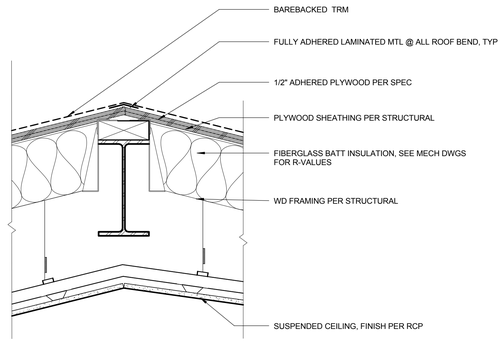

R2	STL/CONC	1	-	-	-	-
TYPE	STRUCTURE	FIRE RATING	IIC RATING	STC RATING	INSUL. TYPE	APPROVAL/REMARKS

THERMOPLASTIC ROOFING R2

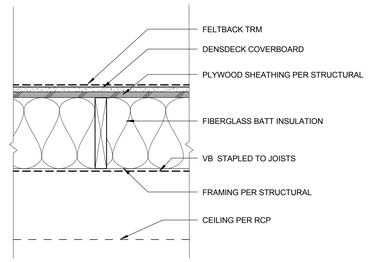

R1	STL/CONC	1	-	-	-	-
TYPE	STRUCTURE	FIRE RATING	IIC RATING	STC RATING	INSUL. TYPE	APPROVAL/REMARKS

THERMOPLASTIC ROOFING R1

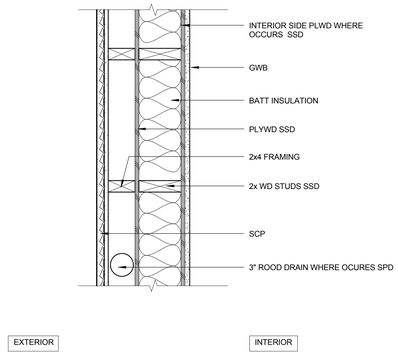

EXTERIOR FURRED OUT WALL H

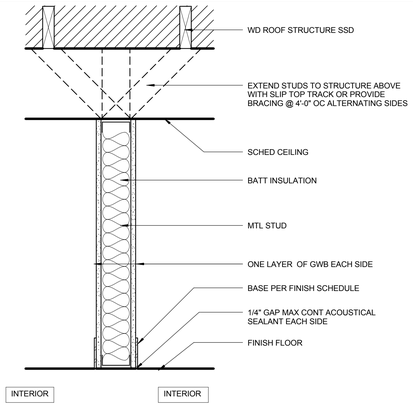

INTERIOR MTL PARTITION C

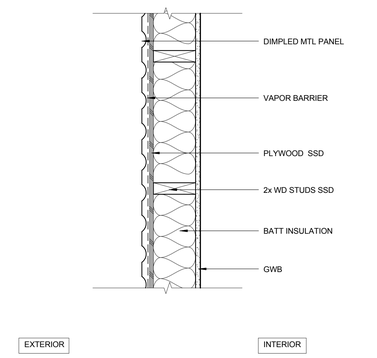

EXTERIOR MTL PANEL WALL G

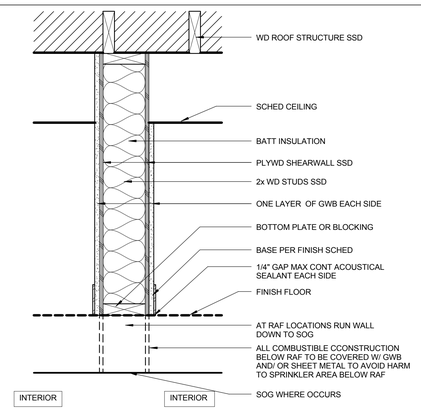

INTERIOR LOAD BEARING PARTITION E

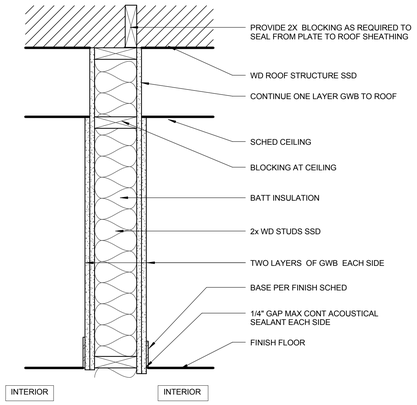

INTERIOR PARTITION B

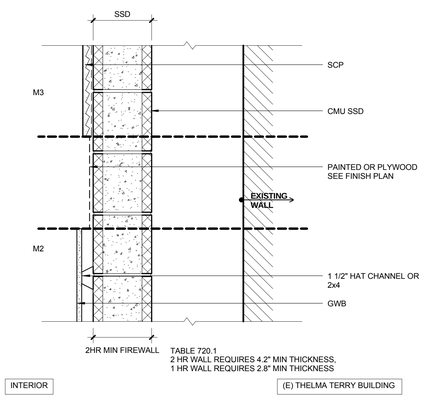

EXTERIOR MASONRY WALL M

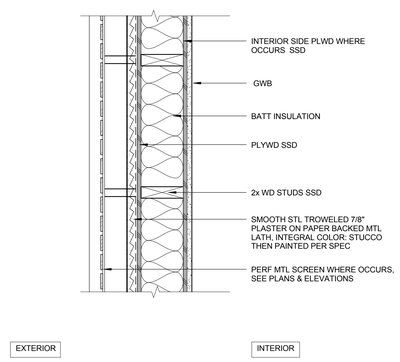

EXTERIOR STUCCO WALL F

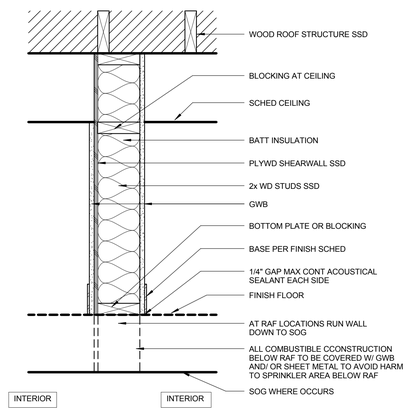

INTERIOR LOAD BEARING PARTITION D

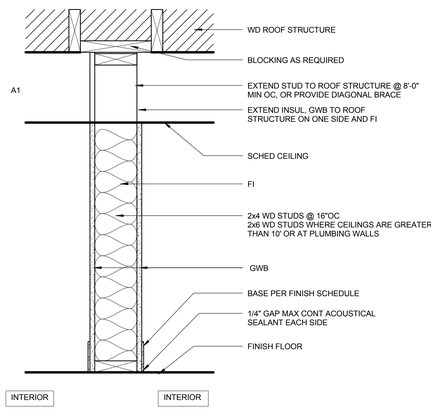

INTERIOR PARTITION A

PICO BRANCH LIBRARY

2201 Pico Blvd.
Santa Monica, CA 90404

PROJECT

KoningEizenbergArchitecture
1454 25th St, Santa Monica, CA 90404
310.828.6131 info@kearch.com
310.828.0719 fax www.kearch.com

ARCHITECT'S PROJECT NO.
1001

ARCHITECT

All designs, ideas, arrangements and plans indicated by these drawings are the property and copyright of the Architect and shall neither be used on any other work nor be disclosed to any other person for any use whatsoever without written permission.

Koning Eizenberg Architecture and/or its principals and employees waives any and all liability or responsibility for problems that may occur when these plans, drawings, specifications, and/or designs are followed without the professional's guidance with ambiguities, or conflicts which are alleged.

CONSULTANT

City of Santa Monica
Architecture Services
1437 4TH STREET, SUITE 300
SANTA MONICA, CA 90401
TEL. (310) 458-2205
FAX. (310) 399-1541
architecture@smgov.net

DATE : _____ 20 __
SUBMITTED BY :

DATE : _____ 20 __
APPROVED BY :
Miriam Mulder,
Architecture Services Manager

CITY OF SANTA MONICA
DEPARTMENT OF PUBLIC WORKS

REVIEWED BY : DATE : _____ 20 __

REVIEWED BY : DATE : _____ 20 __

REVIEWED BY : DATE : _____ 20 __

CITY CLIENT

NO.	DATE	BY	DESCRIPTION

REVISIONS

ISSUE
65% CONSTRUCTION DOCUMENTS / BID SET

DATE
01/23/2012

DRAWING NO. **6693**

SHEET OF SHEETS

SHEET TITLE
WALL / ROOF / FLOOR ASSEMBLIES

SHEET NO.
A9.30

SHEET OF
DWG NO. -
TITLE OF PROJECT:

SHEET OF

DWG. NO. - -

DOOR SCHEDULE

NUMBER	ROOM	DOOR TYPE	DOOR WIDTH	DOOR HEIGHT	DOOR THK	DOOR MATERIAL	DOOR FINISH	FRAME MATERIAL	FRAME FINISH	GLAZING TYPE	GLAZING THK	HARDWARE FIRE RATING	HARDWARE HARDWARE GROUP	HARDWARE CLOSER	HARDWARE PANIC	DETAILS HEAD	DETAILS JAMB	DETAILS SILL	COMMENTS
101	ENTRY	D	8'-0"	7'-10"	1 3/4"	ALUM	ANOD	ALUM	ANOD	CLR	1/4"	NR	9	Yes		2/A9.41	3/A9.41	1/A9.41	POWER ASSIST OPERATOR; CARD KEY ACCESS; OVERHEAD CONCEALED AUTO DOOR OPERATOR; 120VAC
102	WORKROOM	E	3'-0"	7'-0"	1 3/4"	ALUM	ANOD	KDHM	PTD/ALUM	OBS	1/4"	NR	4B			2/A9.42			
102a	WORKROOM	H	8'-0"	6'-8"	1 3/4"	STL	GALV	STL	GALV	--		1 HR	6B			11/A9.41			OVERHEAD COILING DR, 1 HR FIRE RATED ELECTRIC, INSULATED
103	COLLECTION & SEATING	A	3'-0"	9'-0"	1 3/4"	HM	PTD	HM	PTD	--		NR	8A	Yes	Yes	10/A9.41	9/A9.41	8/A9.41	PTD TO MATCH PERF SCREEN; FIRE ALARM CONNECTION, DELAYED EGRESS; 120VAC
104	GROUP STUDY C	F1	3'-6"	7'-0"	1 3/4"	ALUM	ANOD	ALUM	ANOD	CLR	1/4"	NR	4						HAWORTH "ENCLOSE" SLIDING DOOR
105	GROUP STUDY B	F1	3'-6"	7'-0"	1 3/4"	ALUM	ANOD	ALUM	ANOD	CLR	1/4"	NR	4						HAWORTH "ENCLOSE" SLIDING DOOR
106	GROUP STUDY A	F1	3'-6"	7'-0"	1 3/4"	ALUM	ANOD	ALUM	ANOD	CLR	1/4"	NR	4						HAWORTH "ENCLOSE" SLIDING DOOR
107	STOR	G	3'-2"	7'-0"	1 3/4"	WD	PTD	WD/ STL	PTD	--		NR	6				6/A9.42		
109	RESTROOM	C	3'-0"	7'-10"	1 3/4"	ALUM	ANOD	KDHM	PTD/ALUM	OBS	1/4"	NR	1	Yes		2/A9.42	1/A9.42	3/A9.42	
110	JANITOR	A	3'-0"	7'-10"	1 3/4"	HM	PTD	KDHM	PTD/ALUM	--		NR	5	Yes		2/A9.42	1/A9.42		
112	RESTROOM	C	3'-0"	7'-10"	1 3/4"	ALUM	ANOD	KDHM	PTD/ALUM	OBS	1/4"	NR	1	Yes		2/A9.42	1/A9.42	3/A9.42	
113	WC	A	3'-0"	7'-10"	1 3/4"	WD	PTD	KDHM	PTD/ALUM	--		NR	2	Yes		2/A9.42	1/A9.42	3/A9.42	LATCH W/ OCCUPIED INDICATOR
114	I.T.	A	3'-0"	7'-10"	1 3/4"	WD	PTD	KDHM	PTD/ALUM	--		NR	5A			2/A9.42	1/A9.42		CARD KEY ACCESS
116	BRANCH MGR	E	3'-0"	7'-10"	1 3/4"	ALUM	PTD	KDHM	PTD/ALUM	CLR	1/4"	NR	3			2/A9.42	1/A9.42		
117	STORAGE	A	3'-0"	7'-10"	1 3/4"	WD	PTD	KDHM	PTD/ALUM	--		NR	4D			2/A9.42	1/A9.42		
118	LOUNGE	A	3'-0"	8'-0"	1 3/8"	WD	PTD	KDHM	PTD/ALUM	--		NR	4A	Yes		2/A9.42	1/A9.42		CARD KEY ACCESS
119	WC	A	3'-0"	7'-10"	1 3/4"	WD	PTD	KDHM	PTD/ALUM	--		NR	2	Yes		2/A9.42	1/A9.42	3/A9.42	
120	CHILDREN'S LIBRARY	C	3'-0"	8'-0"	1 3/4"	ALUM	ANOD	ALUM	ANOD	CLR	1/4"	NR	8B.1	Yes	Yes				CARD KEY ACCESS; FIRE ALARM CONNECTION; DELAYED EGRESS; 120VAC
124	COMMUNITY RM	I	29'-8"	10'-0"	1 3/4"	ALUM	ANOD	ALUM	ANOD	CLR	1/4"	NR	6C			5/A9.41	6/A9.41	4/A9.41	ADA COMPLIANT SLIDER
124a	COMMUNITY RM	C	3'-0"	7'-10"	1 3/4"	ALUM	ANOD	ALUM	ANOD	CLR	1/4"	NR	8B.1	Yes	Yes				CARD KEY ACCESS
124b	COMMUNITY RM	C	3'-0"	7'-10"	1 3/4"	ALUM	ANOD	ALUM	ANOD	CLR	1/4"	NR	8B	Yes	Yes				
125	PANTRY	A	3'-0"	7'-10"	1 3/4"	WD	PTD	KDHM	PTD/ALUM	--		NR	4C			2/A9.42	1/A9.42		
127	AV RM	B	5'-0"	7'-10"	1 3/4"	WD	PTD	KDHM	PTD/ALUM	--		NR	7A			2/A9.42	1/A9.42		
128	JANITOR	B	6'-0"	7'-10"	1 3/4"	WD	PTD	KDHM	PTD/ALUM	--		NR	7			2/A9.42	1/A9.42		
129	RESTROOM	A	3'-0"	7'-10"	1 3/4"	WD	PTD	KDHM	PTD/ALUM	--		NR	2A	Yes		2/A9.42	1/A9.42	3/A9.42	
130	STOR	F	4'-0"	8'-0"	1 3/4"	WD	PTD	N/A	N/A	--		NR	6A			5/A9.42		5/A9.42	
131	STOR	F	4'-0"	8'-0"	1 3/4"	WD	PTD	N/A	N/A	--		NR	6A			5/A9.42		5/A9.42	
132	ELEC RM	A	4'-0"	8'-0"	1 3/4"	HM	PTD	HM	PTD	--		NR	8				7/A9.41		FACED W/DIMPLED MTL TO MATCH ADJACENT WALL PANEL
R1	ROOF	A	3'-0"	6'-8"	1 3/4"	HM	PTD	HM	PTD	--		NR	TBD			13/A9.42		13/A9.42	

ABBREVIATIONS

ALUM	ALUMINUM
ANOD	ANODIZED
CLR	CLEAR
DB	DARK BRONZE
DG	DUAL GLAZED
FF	FACTORY FINISH
GALV	GALVANIZED
HC	HOLLOW CORE
HM	HOLLOW METAL
IM	PREFINISHED STEEL DOOR FRAME
KDHM	KNOCK DOWN HOLLOW METAL
LAM	LAMINATE
LE	LOW EMITTANCE
ME	MATCH EXISTING
NR	NON RATED
OBS	OBSCURE
PTD	PAINTED
SC	SOLID CORE
SG	SINGLE GLAZED
STOR	STORE FRONT
STL	STEEL
TEMP	TEMPERED
WD	WOOD
e	EXISTING OPENING, DIM V.I.F.

NOTES:
1. SEE MECHANICAL DRAWINGS FOR DOORS THAT WILL REQUIRE UNDERCUTTING.
2. ALL GLAZING TO DOORS TO BE BE FULLY TEMPERED OR LAMINATED GLASS

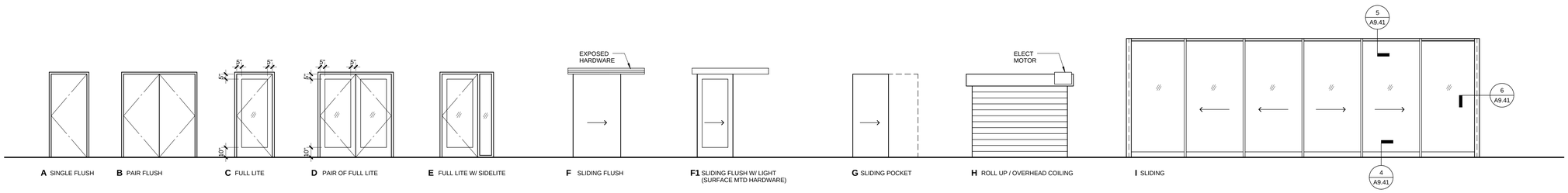

A SINGLE FLUSH **B** PAIR FLUSH **C** FULL LITE **D** PAIR OF FULL LITE **E** FULL LITE W/ SIDELITE **F** SLIDING FLUSH **F1** SLIDING FLUSH W/ LIGHT (SURFACE MTD HARDWARE) **G** SLIDING POCKET **H** ROLL UP / OVERHEAD COILING **I** SLIDING

TITLE OF PROJECT:

DOOR SCHEDULE & LEGEND | 1

PICO BRANCH LIBRARY

2201 Pico Blvd.
Santa Monica, CA 90404

PROJECT

KoningEizenbergArchitecture
1454 25th St, Santa Monica, CA 90404

310.828.6131 info@kearch.com
310.828.0719 fax www.kearch.com

ARCHITECT'S PROJECT NO.
1001

ARCHITECT

All designs, ideas, arrangements and plans indicated by these drawings are the property and copyright of the Architect and shall neither be used on any other work nor be disclosed to any other person for any use whatsoever without written permission.

Koning Eizenberg Architecture and/or its principals and employees waives any and all liability or responsibility for problems that may occur when these plans, drawings, specifications, and/or designs are followed without the professional's guidance with ambiguities, or conflicts which are alleged.

CONSULTANT

City of Santa Monica
Architecture Services

1437 4TH STREET, SUITE 300
SANTA MONICA, CA 90401
TEL. (310) 458-2205
FAX. (310) 399-1541
architecture@smgov.net

DATE : 20
SUBMITTED BY :

DATE : 20
APPROVED BY :
Miriam Mulder,
Architecture Services Manager

CITY OF SANTA MONICA
DEPARTMENT OF PUBLIC WORKS

REVIEWED BY : DATE : 20

REVIEWED BY : DATE : 20

REVIEWED BY : DATE : 20

CITY CLIENT

NO.	DATE	BY	DESCRIPTION

REVISIONS

ISSUE
65% CONSTRUCTION DOCUMENTS / BID SET

DATE
01/23/2012

DRAWING NO. **6693**

SHEET OF SHEETS

SHEET TITLE
DOOR SCHEDULE

SHEET NO.
A9.40

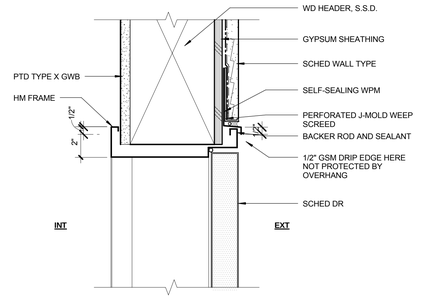

NOTE:
- JAMB SIM.
- STL. STUD CONST. SIM.

EXT HM DR HEAD @ STUCCO 3" = 1'-0" **10**

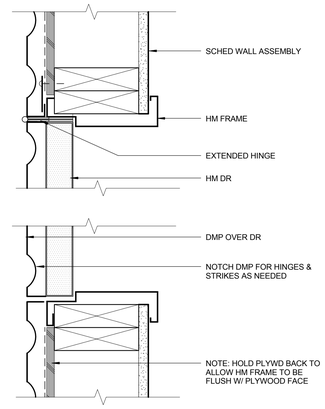

DR 132 JAMB 0 1" 2" 4" 3" = 1'-0" **7**

MATERIAL ABBREVIATIONS

AGC	ALUMINUM GLAZING CHANNEL
APC	ACOUSTICAL PLASTER CEILING
DF	DRAINAGE FABRIC
DMP	DIMPLED MTL PANEL
FI	FIBERGLASS INSULATION
HW	HARD WOOD
IGU	INSULATED GLASS UNIT
NSB	NEOPRENE SETTING BLOCK
PB	PROTECTION BOARD
PCP	PRE-CAST CONCRETE PLANKS
RAF	RAISED ACCESS FLOOR SYSTEM
RD	ROOF DRAIN
RPU	ROOFING PLYWOOD UNDERLAY
SCP	SMOOTH STEEL TROWLED CEMENT PLASTER
SOG	SLAB ON GRADE
SS	STAINLESS STEEL
TRM	THERMOPLASTIC ROOFING MATERIAL
VB	VAPOR BARRIER
WOM	WALLK OFF MAT
WP	WATERPROOFING

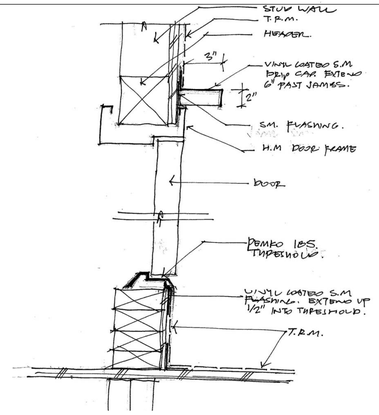

R1 - HEAD & SILL 0 1" 2" 4" 1 1/2" = 1'-0" **13**

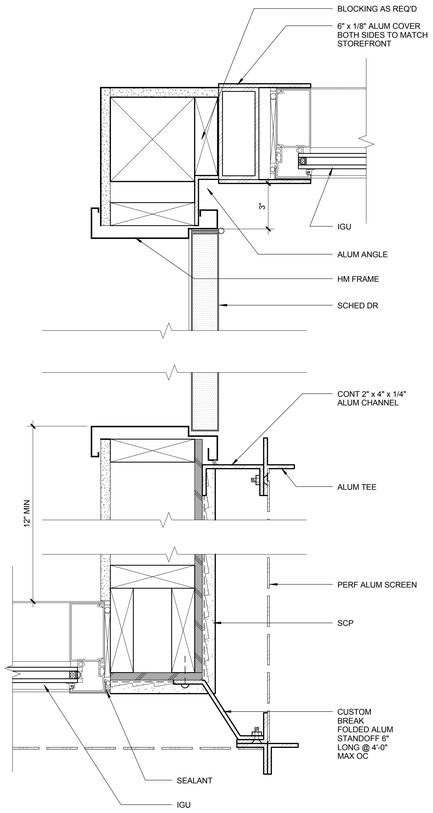

DR 103 JAMB 0 1" 2" 4" 3" = 1'-0" **9**

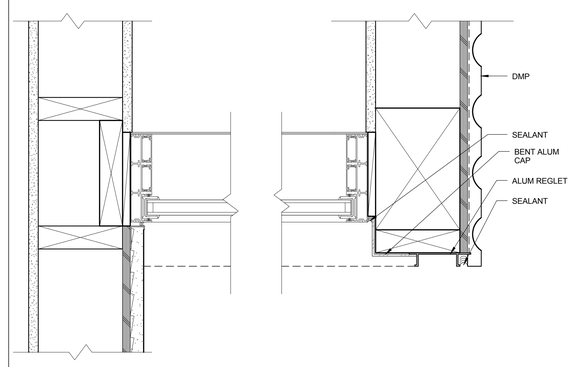

FLEETWOOD DOOR JAMB 0 1" 2" 4" 3" = 1'-0" **6**

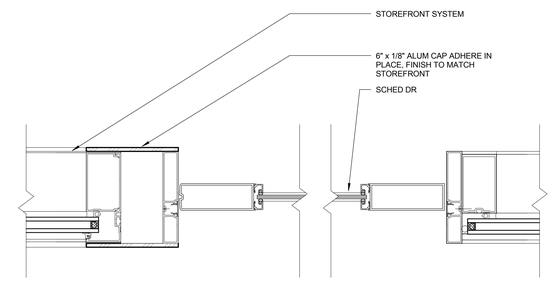

ENTRY DOOR JAMB 0 1" 2" 4" 3" = 1'-0" **3**

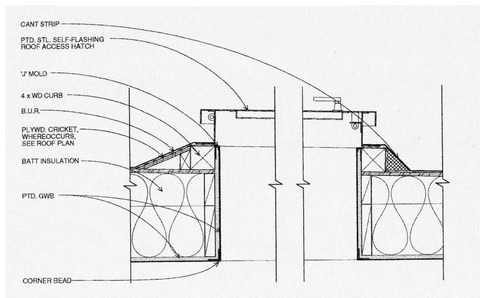

ROOF ACCESS HATCH N.T.S. **12**

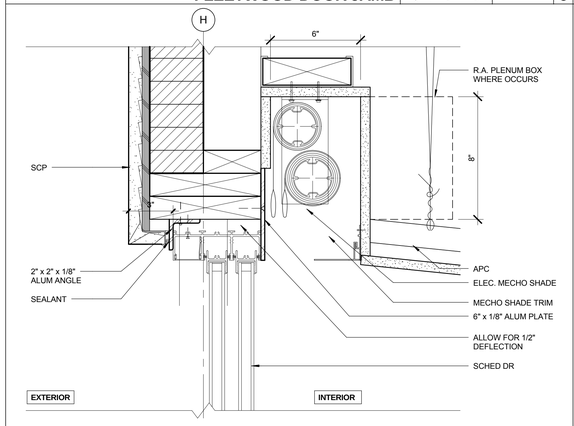

FLEETWOOD DOOR HEAD 0 1" 2" 4" 3" = 1'-0" **5**

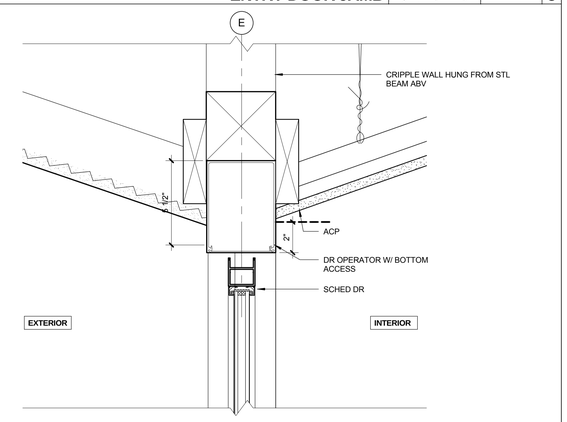

ENTRY DOOR HEAD 0 1" 2" 4" 3" = 1'-0" **2**

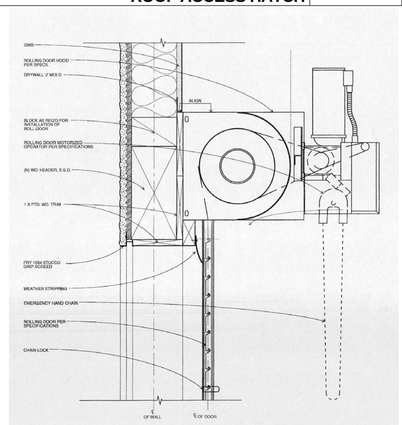

OVERHEAD DOOR 102A N.T.S. **11**

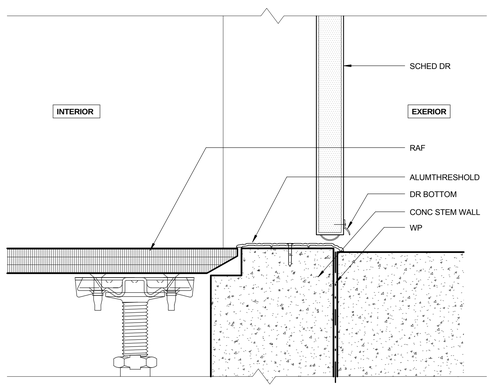

DR 103 SILL 0 1" 2" 4" 3" = 1'-0" **8**

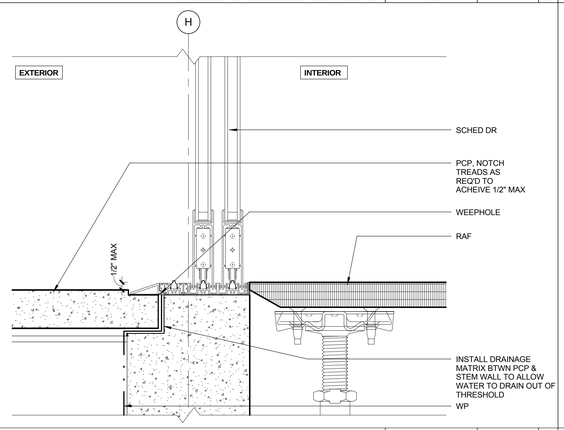

FLEETWOOD DOOR SILL 0 1" 2" 4" 3" = 1'-0" **4**

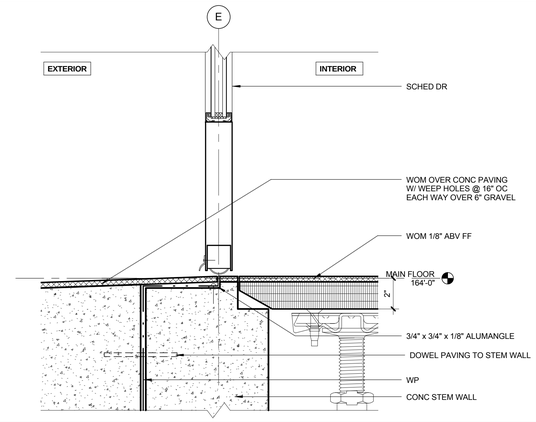

ENTRY DOOR SILL 0 1" 2" 4" 3" = 1'-0" **1**

PICO BRANCH LIBRARY

2201 Pico Blvd.
Santa Monica, CA 90404

PROJECT

KoningEizenbergArchitecture
1454 25th St, Santa Monica, CA 90404

310.828.6131 info@kearch.com
310.828.0719 fax www.kearch.com

ARCHITECT'S PROJECT NO.
1001

ARCHITECT

All designs, ideas, arrangements and plans indicated by these drawings are the property and copyright of the Architect and shall neither be used on any other work nor be disclosed to any other person for any use whatsoever without written permission.

Koning Eizenberg Architecture and/or its principals and employees waives any and all liability or responsibility for problems that may occur when these plans, drawings, specifications, and/or designs are followed without the professional's guidance with ambiguities, or conflicts which are alleged.

CONSULTANT

City of Santa Monica Architecture Services

1437 4TH STREET, SUITE 300
SANTA MONICA, CA 90401
TEL. (310) 458-2205
FAX. (310) 399-1541
architecture@smgov.net

DATE : _____ 20 __
SUBMITTED BY :

DATE : _____ 20 __
APPROVED BY :
Miriam Mulder,
Architecture Services Manager

CITY OF SANTA MONICA
DEPARTMENT OF PUBLIC WORKS

REVIEWED BY : DATE : _____ 20 __

REVIEWED BY : DATE : _____ 20 __

REVIEWED BY : DATE : _____ 20 __

CITY CLIENT

NO.	DATE	BY	DESCRIPTION

REVISIONS

ISSUE
65% CONSTRUCTION DOCUMENTS / BID SET

DATE
01/23/2012

DRAWING NO. **6693**

SHEET OF SHEETS

SHEET TITLE
DOOR DETAILS

SHEET NO.
A9.41

SHEET OF

DWG NO. -

TITLE OF PROJECT:

SHEET OF

DWG NO. -

MATERIAL ABBREVIATIONS

AGC	ALUMINUM GLAZING CHANNEL
APC	ACOUSTICAL PLASTER CEILING
DF	DRAINAGE FABRIC
DMP	DIMPLED MTL PANEL
FI	FIBERGLASS INSULATION
HW	HARD WOOD
IGU	INSULATED GLASS UNIT
NSB	NEOPRENE SETTING BLOCK
PB	PROTECTION BOARD
PCP	PRE-CAST CONCRETE PLANKS
RAF	RAISED ACCESS FLOOR SYSTEM
RD	ROOF DRAIN
RPU	ROOFING PLYWOOD UNDERLAY
SCP	SMOOTH STEEL TROWLED CEMENT PLASTER
SOG	SLAB ON GRADE
SS	STAINLESS STEEL
TRM	THERMOPLASTIC ROOFING MATERIAL
VB	VAPOR BARRIER
WOM	WALLK OFF MAT
WP	WATERPROOFING

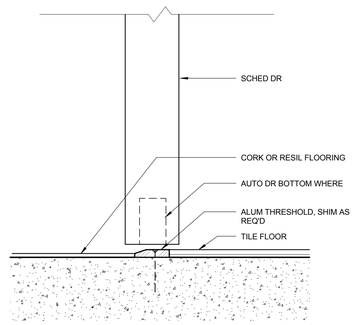

INTERIOR SILL @ TILE FLOOR 0 1" 2" 4" 6" = 1'-0" **3**

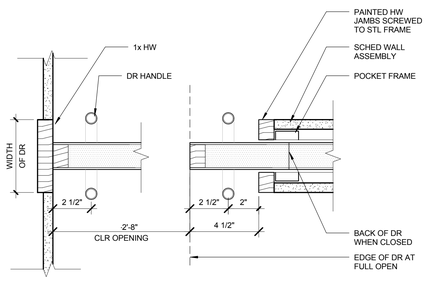

DR 107 JAMB 0 1" 2" 4" 3" = 1'-0" **6**

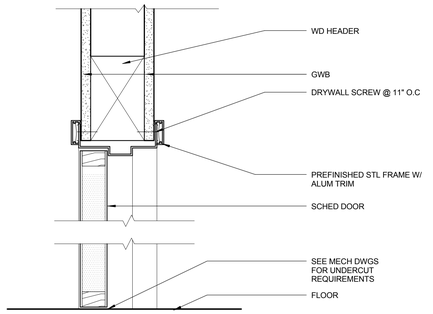

INTERIOR HEAD @ GWB 0 1" 2" 4" 3" = 1'-0" **2**

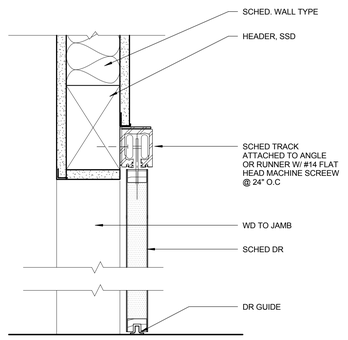

SURFACE MTD. SLIDER 0 1" 2" 4" 3" = 1'-0" **5**

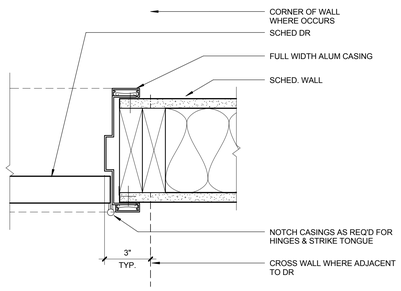

INTERIOR JAMB@ GWB 0 1" 2" 4" 3" = 1'-0" **1**

TITLE OF PROJECT:

PICO BRANCH LIBRARY

2201 Pico Blvd.
Santa Monica, CA 90404

PROJECT

KoningEizenbergArchitecture
1454 25th St, Santa Monica, CA 90404

310.828.6131 info@kearch.com
310.828.0719 fax www.kearch.com

ARCHITECT'S PROJECT NO.
1001

ARCHITECT

All designs, ideas, arrangements and plans indicated by these drawings are the property and copyright of the Architect and shall neither be used on any other work nor be disclosed to any other person for any use whatsoever without written permission.

Koning Eizenberg Architecture and/or its principals and employees waives any and all liability or responsibility for problems that may occur when these plans, drawings, specifications, and/or designs are followed without the professional's guidance with ambiguities, or conflicts which are alleged.

CONSULTANT

City of Santa Monica Architecture Services
1437 4TH STREET, SUITE 300
SANTA MONICA, CA 90401
TEL. (310) 458-2205
FAX. (310) 399-1541
architecture@smgov.net

DATE : 20
SUBMITTED BY :

DATE : 20
APPROVED BY :
Miriam Mulder,
Architecture Services Manager

CITY OF SANTA MONICA
DEPARTMENT OF PUBLIC WORKS

REVIEWED BY : DATE : 20

REVIEWED BY : DATE : 20

REVIEWED BY : DATE : 20

CITY CLIENT

NO.	DATE	BY	DESCRIPTION

REVISIONS

ISSUE
65% CONSTRUCTION DOCUMENTS / BID SET

DATE
01/23/2012

DRAWING NO. **6693**

SHEET OF SHEETS

SHEET TITLE
DOOR DETAILS

SHEET NO.
A9.42

124c

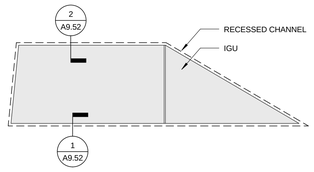

121

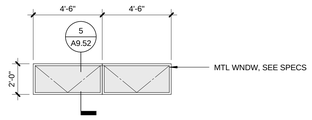

102

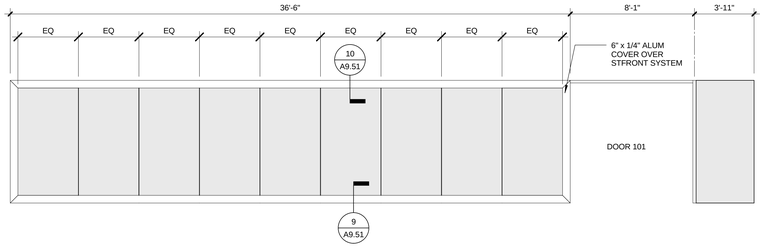

101

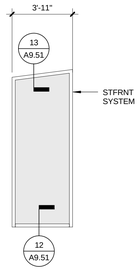

103

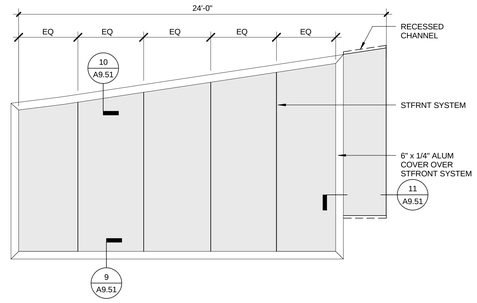

103a

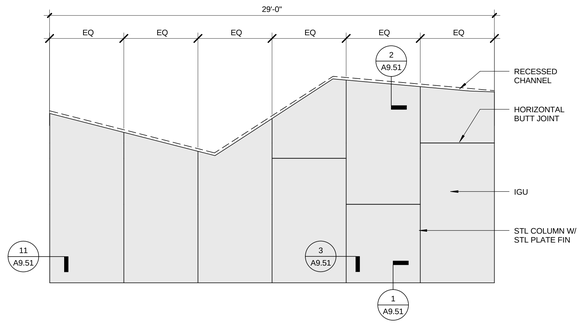

103b

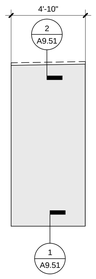

103c

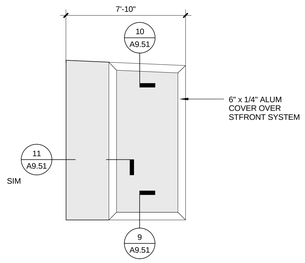

103d

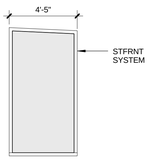

104

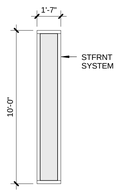

116

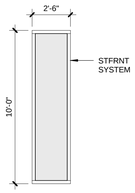

118

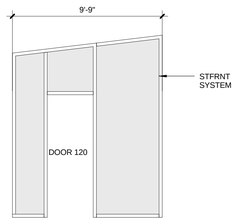

120

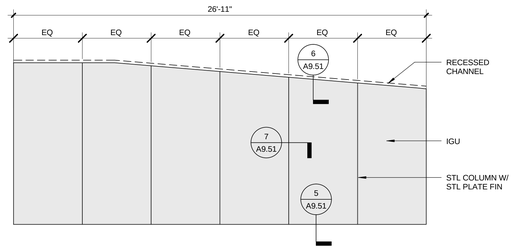

120a

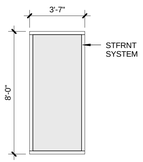

124

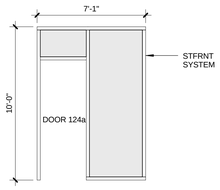

124a

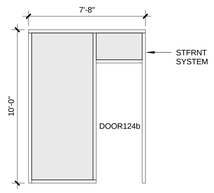

124b

WINDOW NOTES

1. THIS SCHEDULE IS INTENDED AS A GUIDE. CONTRACTOR TO VERIFY ALL OPENINGS IN FIELD & SIZE WINDOWS TO THE FULL WIDTH OF OPENING U.N.O.
2. COORDINATE JAMB/ HEAD DIMENSIONS W/ VARYING WALL THICKNESSES.
3. SEE SPECS FOR GLAZING TYPES - ALL GLASS SHALL BE DUAL GLAZED LOW E U.N.O.
4. ALL DIMENSIONS TO BE VERIFIED IN FIELD.

SHEET OF

DWG. NO. - -

TITLE OF PROJECT

PICO BRANCH LIBRARY

2201 Pico Blvd.
Santa Monica, CA 90404

PROJECT

KoningEizenbergArchitecture
1454 25th St, Santa Monica, CA 90404

310.828.6131 info@kearch.com
310.828.0719 fax www.kearch.com

ARCHITECT'S PROJECT NO.
1001

ARCHITECT

All designs, ideas, arrangements and plans indicated by these drawings are the property and copyright of the Architect and shall neither be used on any other work nor be disclosed to any other person for any use whatsoever without written permission.

Koning Eizenberg Architecture and/or its principals and employees waives any and all liability or responsibility for problems that may occur when these plans, drawings, specifications, and/or designs are followed without the professional's guidance with ambiguities, or conflicts which are alleged.

CONSULTANT

City of
Santa Monica
Architecture Services

1437 4TH STREET, SUITE 300
SANTA MONICA, CA 90401
TEL. (310) 458-2205
FAX. (310) 399-1541
architecture@smgov.net

DATE : _____ 20 __
SUBMITTED BY :

DATE : _____ 20 __
APPROVED BY :
Miriam Mulder,
Architecture Services Manager
CITY OF SANTA MONICA
DEPARTMENT OF PUBLIC WORKS

REVIEWED BY : DATE : _____ 20 __

REVIEWED BY : DATE : _____ 20 __

REVIEWED BY : DATE : _____ 20 __

CITY CLIENT

NO.	DATE	BY	DESCRIPTION

REVISIONS

ISSUE
65% CONSTRUCTION DOCUMENTS / BID SET

DATE
01/23/2012

DRAWING NO. **6693**

SHEET OF SHEETS

SHEET TITLE
WINDOW TYPES

SHEET NO.
A9.50

SHEET OF

DWG NO. - -

MATERIAL ABBREVIATIONS

AGC	ALUMINUM GLAZING CHANNEL
APC	ACOUSTICAL PLASTER CEILING
DF	DRAINAGE FABRIC
DMP	DIMPLED MTL PANEL
FI	FIBERGLASS INSULATION
HW	HARD WOOD
IGU	INSULATED GLASS UNIT
NSB	NEOPRENE SETTING BLOCK
PB	PROTECTION BOARD
PCP	PRE-CAST CONCRETE PLANKS
RAF	RAISED ACCESS FLOOR SYSTEM
RD	ROOF DRAIN
RPU	ROOFING PLYWOOD UNDERLAY
SCP	SMOOTH STEEL TROWLED CEMENT PLASTER
SOG	SLAB ON GRADE
SS	STAINLESS STEEL
TRM	THERMOPLASTIC ROOFING MATERIAL
VB	VAPOR BARRIER
WOM	WALLK OFF MAT
WP	WATERPROOFING

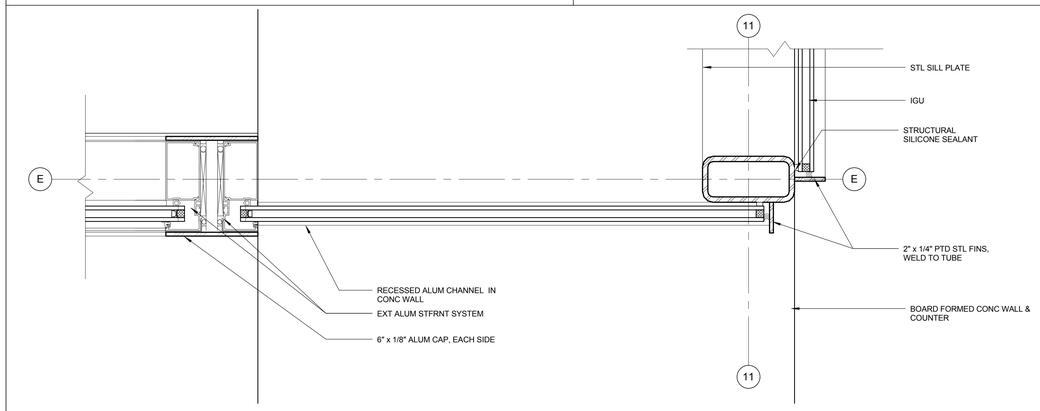

JAMB @ GLAZING CORNER 0 1" 2" 4" 3" = 1'-0" **11**

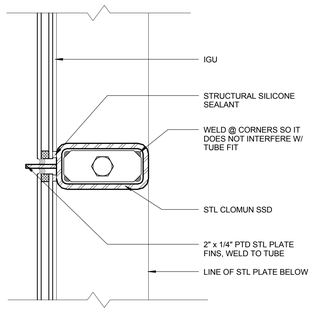

JAMB @ WEST GLAZING 0 1" 2" 4" 3" = 1'-0" **7**

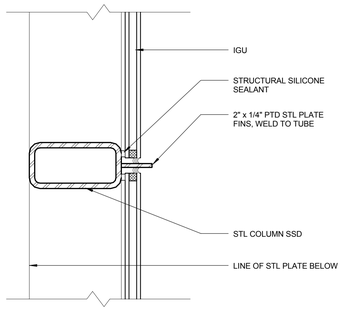

JAMB @ EAST GLAZING 0 1" 2" 4" 3" = 1'-0" **3**

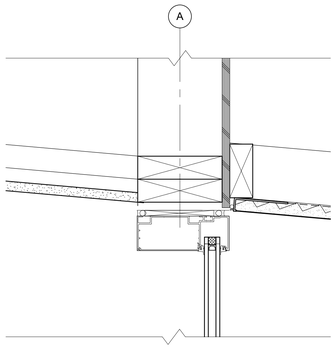

STOREFRONT HEAD 0 1" 2" 4" 3" = 1'-0" **13**

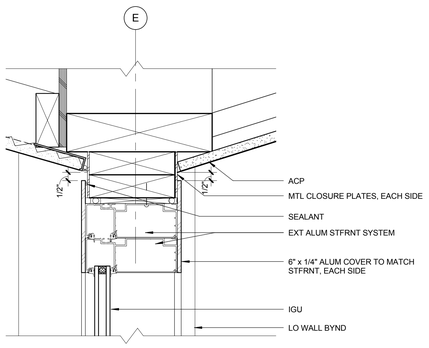

GLAZING HEAD @ SOFFIT 0 1" 2" 4" 3" = 1'-0" **10**

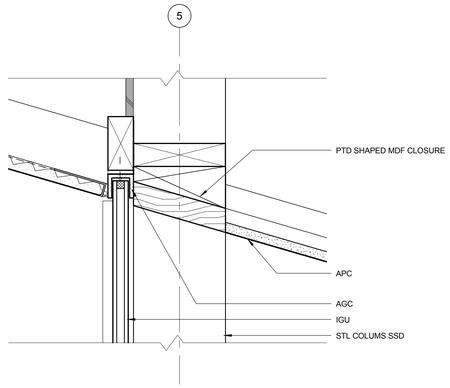

HEAD @ WEST GLAZING 0 1" 2" 4" 3" = 1'-0" **6**

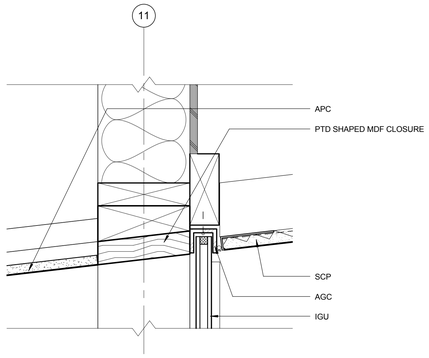

HEAD @ EAST GLAZING 0 1" 2" 4" 3" = 1'-0" **2**

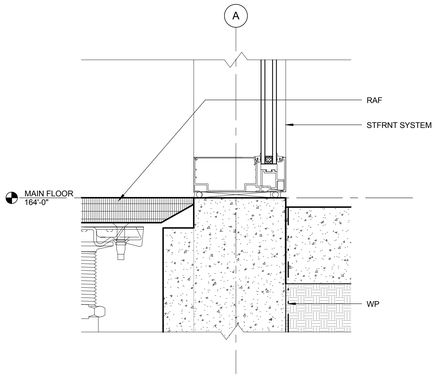

STOREFRONT SILL 0 1" 2" 4" 3" = 1'-0" **12**

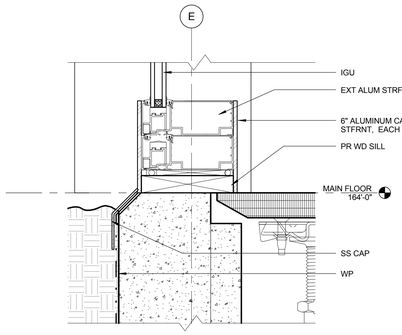

GLAZING SILL @ STEM WALL 0 1" 2" 4" 3" = 1'-0" **9**

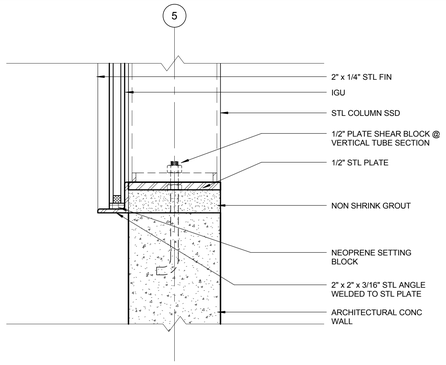

SILL @ WEST GLAZING 0 1" 2" 4" 3" = 1'-0" **5**

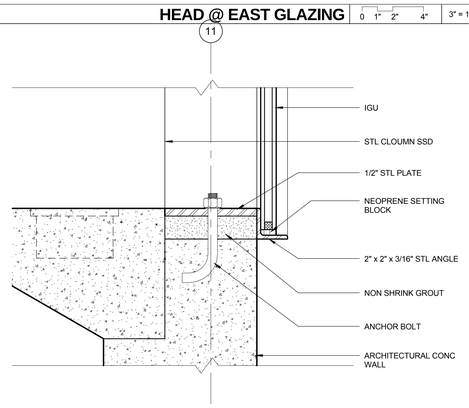

SILL @ EAST GLAZING 0 1" 2" 4" 3" = 1'-0" **1**

TITLE OF PROJECT

PICO BRANCH LIBRARY

2201 Pico Blvd.
Santa Monica, CA 90404

PROJECT

KoningEizenbergArchitecture
1454 25th St, Santa Monica, CA 90404

310.828.6131 info@kearch.com
310.828.0719 fax www.kearch.com

ARCHITECT'S PROJECT NO.
1001

ARCHITECT

All designs, ideas, arrangements and plans indicated by these drawings are the property and copyright of the Architect and shall neither be used on any other work nor be disclosed to any other person for any use whatsoever without written permission.

Koning Eizenberg Architecture and/or its principals and employees waives any and all liability or responsibility for problems that may occur when these plans, drawings, specifications, and/or designs are followed without the professional's guidance with ambiguities, or conflicts which are alleged.

CONSULTANT

City of Santa Monica Architecture Services

1437 4TH STREET, SUITE 300
SANTA MONICA, CA 90401
TEL. (310) 458-2205
FAX. (310) 399-1541
architecture@smgov.net

DATE : 20
SUBMITTED BY :

DATE : 20
APPROVED BY :
Miriam Mulder,
Architecture Services Manager

CITY OF SANTA MONICA
DEPARTMENT OF PUBLIC WORKS

REVIEWED BY : DATE : 20

REVIEWED BY : DATE : 20

REVIEWED BY : DATE : 20

CITY CLIENT

NO.	DATE	BY	DESCRIPTION

REVISIONS

ISSUE
65% CONSTRUCTION DOCUMENTS / BID SET

DATE
01/23/2012

DRAWING NO. **6693**

SHEET OF SHEETS

SHEET TITLE
WINDOW DETAILS

SHEET NO.
A9.51

SHEET OF

DWG NO. - -

MATERIAL ABBREVIATIONS

AGC	ALUMINUM GLAZING CHANNEL
APC	ACOUSTICAL PLASTER CEILING
DF	DRAINAGE FABRIC
DMP	DIMPLED MTL PANEL
FI	FIBERGLASS INSULATION
HW	HARD WOOD
IGU	INSULATED GLASS UNIT
NSB	NEOPRENE SETTING BLOCK
PB	PROTECTION BOARD
PCP	PRE-CAST CONCRETE PLANKS
RAF	RAISED ACCESS FLOOR SYSTEM
RD	ROOF DRAIN
RPU	ROOFING PLYWOOD UNDERLAY
SCP	SMOOTH STEEL TROWLED CEMENT PLASTER
SOG	SLAB ON GRADE
SS	STAINLESS STEEL
TRM	THERMOPLASTIC ROOFING MATERIAL
VB	VAPOR BARRIER
WOM	WALLK OFF MAT
WP	WATERPROOFING

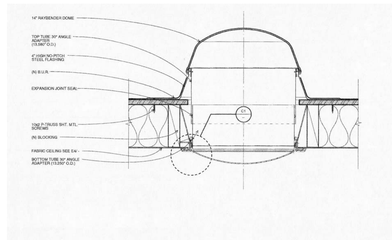

SOLATUBE 0 1" 2" 4" 3" = 1'-0" **6**

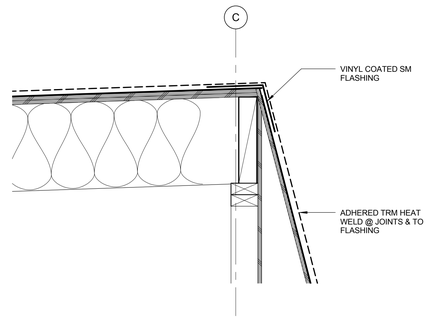

ROOF @ CLERESTORY 0 2" 4" 6" 8" 1 1/2" = 1'-0" **3**

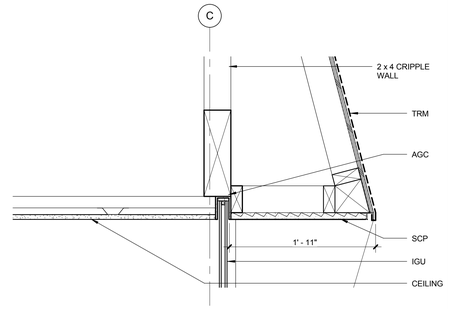

HEAD @ CLERESTORY 0 2" 4" 6" 8" 1 1/2" = 1'-0" **2**

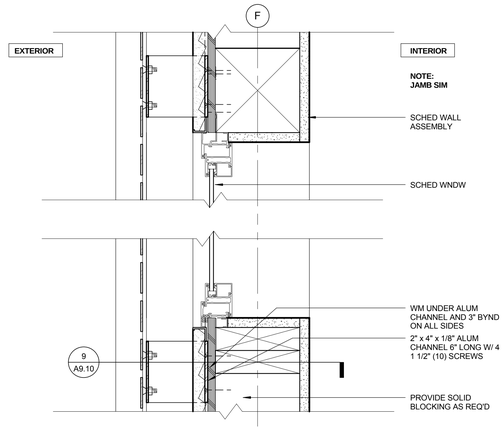

WORK ROOM WNDW 0 1" 2" 4" 3" = 1'-0" **5**

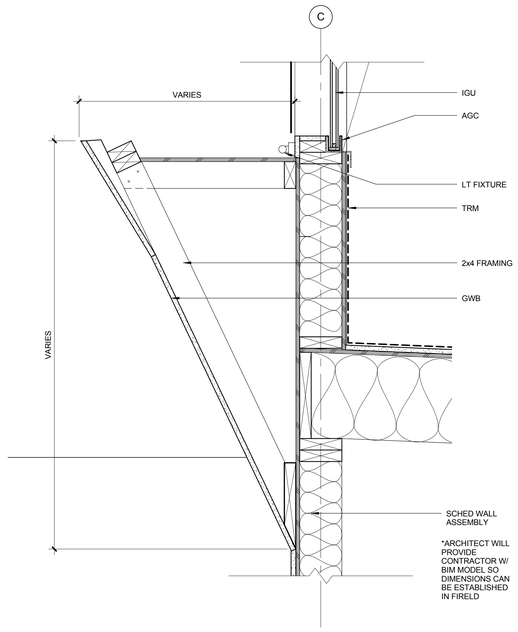

SILL @ CLERESTORY 0 2" 4" 6" 8" 1 1/2" = 1'-0" **1**

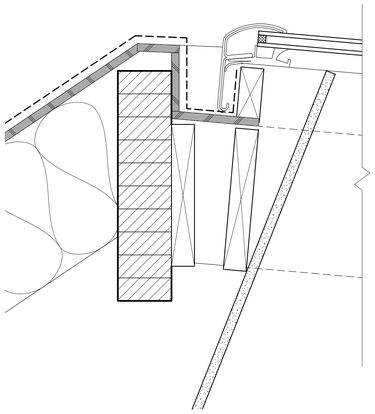

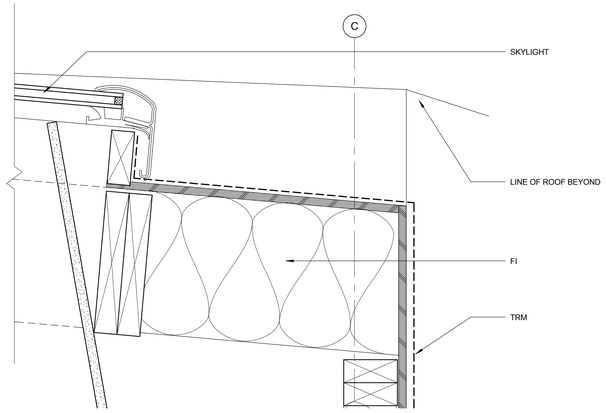

SKYLIGHT 0 1" 2" 4" 3" = 1'-0" **4**

TITLE OF PROJECT:

PICO BRANCH LIBRARY

2201 Pico Blvd.
Santa Monica, CA 90404

PROJECT

KoningEizenbergArchitecture
1454 25th St, Santa Monica, CA 90404

310.828.6131 info@kearch.com
310.828.0719 fax www.kearch.com

ARCHITECT'S PROJECT NO.
1001

ARCHITECT

All designs, ideas, arrangements and plans indicated by these drawings are the property and copyright of the Architect and shall neither be used on any other work nor be disclosed to any other person for any use whatsoever without written permission.

Koning Eizenberg Architecture and/or its principals and employees waives any and all liability or responsibility for problems that may occur when these plans, drawings, specifications, and/or designs are followed without the professional's guidance with ambiguities, or conflicts which are alleged.

CONSULTANT

City of Santa Monica Architecture Services

1437 4TH STREET, SUITE 300
SANTA MONICA, CA 90401
TEL. (310) 458-2205
FAX. (310) 399-1541
architecture@smgov.net

SUBMITTED BY : DATE : 20

APPROVED BY : DATE : 20
Miriam Mulder,
Architecture Services Manager
CITY OF SANTA MONICA
DEPARTMENT OF PUBLIC WORKS

REVIEWED BY : DATE : 20

REVIEWED BY : DATE : 20

REVIEWED BY : DATE : 20

CITY CLIENT

NO.	DATE	BY	DESCRIPTION

REVISIONS

ISSUE
65% CONSTRUCTION DOCUMENTS / BID SET

DATE
01/23/2012

DRAWING NO. **6693**

SHEET OF SHEETS

SHEET TITLE
WINDOW DETAILS

SHEET NO.
A9.52

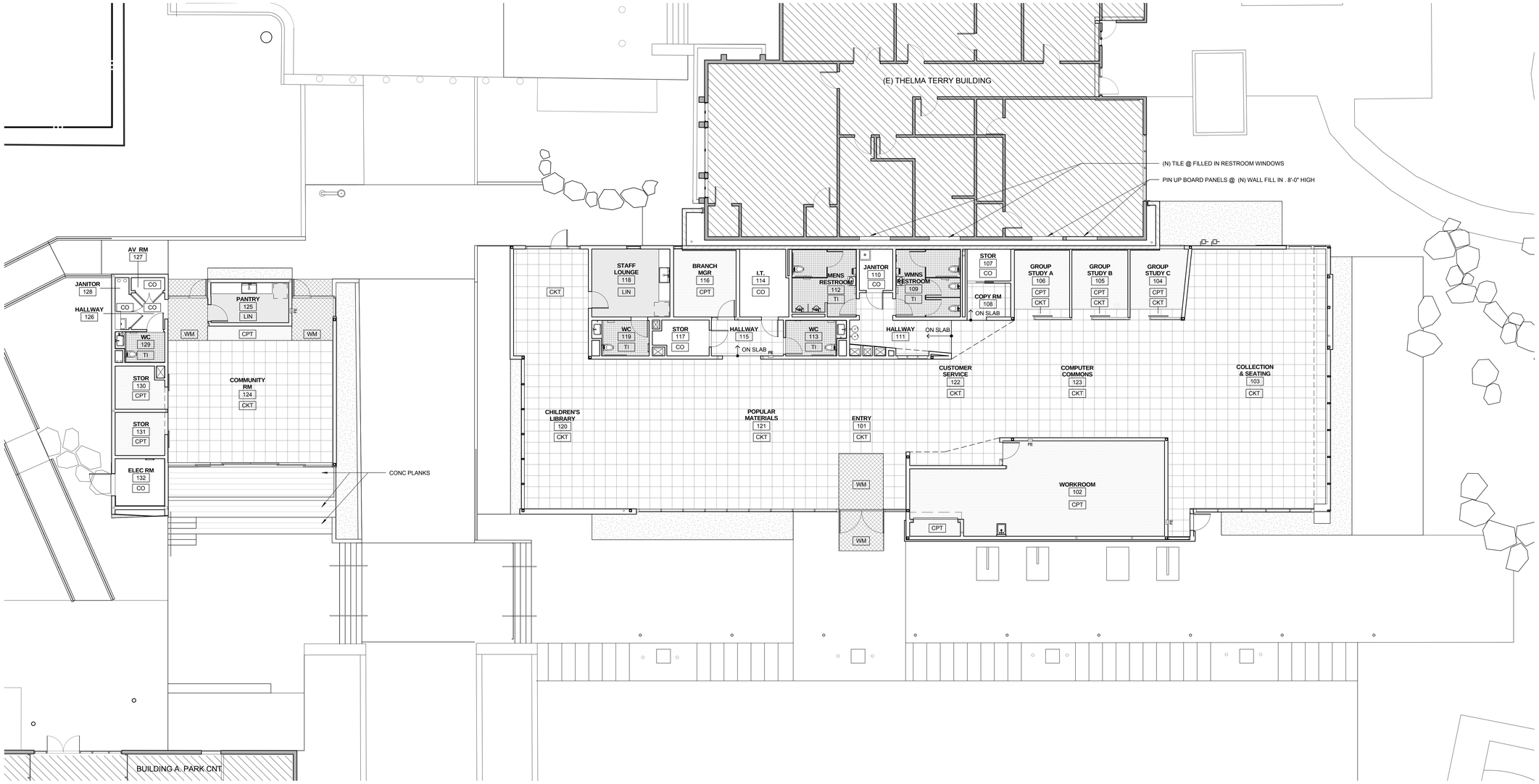

FINISH PLAN

0 2' 4' 8' | 1/8" = 1'-0" | 2

FINISH SCHEDULE												
				WALL FINISH				BASE FINISH				
NUMBER	ROOM NAME	CEILING FINISH	FLOOR FINISH	N	E	S	W	N	E	S	W	NOTES
101	ENTRY	AP1	CKT / WM	PTD	PTD	N/A	N/A	MT	MT	N/A	N/A	
102	WORKROOM	PTD	CPT	PTD	PTD	PTD	PTD	MT	MT	MT	MT	
103	COLLECTION & SEATING	AP1/AP2	CKT	PTD	PTD	N/A	PTD	MT	MT	N/A	MT	
104	GROUP STUDY C	PTD	CPT/ CKT	PTD	DEB	N/A	DEB	MT	MT	N/A	MT	N WALL GETS APPLIED GRAPHIC
105	GROUP STUDY B	PTD	CPT/ CKT	PTD	DEB	N/A	DEB	MT	MT	N/A	MT	N WALL GETS APPLIED GRAPHIC
106	GROUP STUDY A	PTD	CPT CKT	PTD	DEB	N/A	DEB	MT	MT	N/A	MT	N WALL GETS APPLIED GRAPHIC
107	STOR	PTD	CO	PTD	PTD	PTD	PTD	VB	VB	VB	VB	
108	COPY RM	PTD	CKT	PTD	PTD	PTD	PTD	MT	MT	MT	MT	
109	WMNS RESTROOM	PTD	TI	TI	TI	TI	TI	TB	TB	TB	TB	CERAMIC TILE FULL HEIGHT OF WALL
110	JANITOR	PTD	CO	VI/ CMU	VI / PTD	VI / PTD	VI / PTD	VB	VB	VB	VB	VINYL COVERING TO 4'-0" AFF
111	HALLWAY	PTD	CKT	PTD	PTD	PTD	PTD	MT	MT	MT	MT	
112	MENS RESTROOM	PTD	TI	TI	TI	TI	TI	TB	TB	TB	TB	CERAMIC TILE FULL HEIGHT OF WALL
113	WC	PTD	TI	TI	TI	TI	TI	TB	TB	TB	TB	CERAMIC TILE FULL HEIGHT OF WALL
114	I.T.	PTD	CO	3/4" PLYWD	3/4" PLYWD	3/4" PLYWD	3/4" PLYWD	-	-	-	-	PLYWD FULL HEIGHT
115	HALLWAY	PTD	CKT	PTD	PTD	PTD	PTD	MT	MT	MT	MT	
116	BRANCH MGR	PTD	CPT	PTD	PTD	PTD	PTD	MT	MT	MT	MT	
117	STOR	PTD	CO	PTD	PTD	PTD	PTD	VB	VB	VB	VB	
118	STAFF LOUNGE	PTD	LIN	PTD	PTD	PTD	PTD	MT	MT	MT	MT	
119	WC	PTD	TI	TI / PTD	TI / PTD	TI / PTD	TI / PTD	TB	TB	TB	TB	CERAMIC TILE UP TO 4'-0" AFF
120	CHILDREN'S LIBRARY	AP1	CKT	PTD	PTD	PTD	PTD	MT	MT	MT	MT	
121	POPULAR MATERIALS	AP1	CKT	PTD	N/A	N/A	N/A	MT	N/A	N/A	N/A	
122	CUSTOMER SERVICE	AP1	CKT	PTD	N/A	PTD	N/A	MT	N/A	MT	N/A	
123	COMPUTER COMMONS	AP1	CKT	PTD	N/A	PTD	N/A	MT	N/A	MT	N/A	
124	COMMUNITY RM	AP1	CKT	PTD	PTD	N/A	PTD	MT	MT	N/A	MT	
125	PANTRY	PTD	LIN	PTD	PTD	PTD	PTD	MT	MT	MT	MT	
126	HALLWAY	PTD	CKT	PTD	N/A	PTD	PTD	MT	N/A	MT	MT	
127	AV RM	PTD	CO	PTD	PTD	PTD	PTD	VB	VB	VB	VB	
128	JANITOR	PTD	CO	VI / PTD	VI / PTD	VI / PTD	VI / PTD	VB	VB	VB	VB	VINYL COVERING UP TO 4'-0" AFF
129	WC	PTD	TI	TI	TI	TI	TI	TB	TB	TB	TB	CERAMIC TILE FULL HEIGHT OF WALL
130	STOR	PTD	CPT	PTD	PTD	PTD	PTD	VB	VB	VB	VB	
131	STOR	PTD	CPT	PTD	PTD	PTD	PTD	VB	VB	VB	VB	
132	ELEC RM	PTD	CO	PTD/ CO	PTD/ CO	PTD	PTD	-	-	-	-	

LOCATION	SIZE	TYPE	DESCRIPTION	MANUFACTURER	NOTES
CEILING		PTD	GWB, PTD		
		AP1	ACOUSTIC PLASTER ON SS SYSTEM	STAR SILENT	
		AP2	ACOUSTIC PLASTER ON GWB	STAR SILENT OLASTER ON GWB	
FLOORS		CO	CONCRETE, CLEAR SEALED		MATTE FIN
	19.69" x 19.69"	CPT	CARPET TILE	INTERFACE FLOOR, CARPET TILE	ALLOW UP TO 4 COLORS
		CKT	CORK TILE	WINCANDER	ON RAISED FLOOR (TATE ACCESS), ON SLAB WHERE NOTED
		LIN	LINOLEUM	FORBO INDUSTRIES LINOLEUM	ALLOW UP TO 4 COLORS, SHEET
	5" x 5"	TI	CERAMIC TILE	DAL-TILE	ALLOW UP TO 4 COLORS
		WM	WALK-OFF MAT		
WALLS		PTD	GWB, PTD		
		TIL	CERAMIC TILE	DAL-TILE	ALLOW UP TO 4 COLORS IN PAINT
		CKT	CORK TILE	WINCANDER	
		DEB	MAGNETIC DRY ERASE BOARD ON GWB	IDEA PAINT	ALLOW CUSTOM COLOR
		CMU	PTD CMU		
		CO	CONCRETE, CLEAR SEALED		MATTE FIN
BASE		MT	METAL BASE		4" ANOD ALUM BASE, FLUSH INSTALL
		TB	CERAMIC TILE	DAL-TILE	
		VB	VINYL BASE		4" BASE FLAT
		VI	VINYL COVERING		

FINISH PLAN NOTES:

1. SEE SPECIFICATIONS FOR ADDITIONAL FINISH INFORMATION & TYPICAL PAINT TYPES: INT, EXT, FLAT, EGGSHELL, SEMI-GLOSS, ETC.
2. SEE INTERIOR ELEVATIONS & RELEVANT DETAILS FOR ADDITIONAL INFORMATION.
3. ALLOW FOR UP TO 4 COLORS OF CPT (CARPET TILE).
4. ALLOW FOR UP TO 4 COLORS IN PTD SURFACES.
5. ALLOW FOR UP TO 4 COLORS IN TI (CERAMIC TILE).
6. ALLOW FOR VARIOUS PAINT FINISHES; FLAT, EGGSHELL, & SEMIGLOSS.
7. ALL GWB TO BE A-LEVEL FINISH.
8. ALLOW FOR UP TO 4 COLORS IN LIN (LINOLEUM)
9. SEE GRAPHIC SHEETS FOR AREAS W/ APPLIED WALL GRAPHICS.

LEGEND

- CARPET TILE (2' X 2'. ALLOW UP TO 4 COLORS)
- CERAMIC TILE (2" X 2". ALLOW UP TO 4 COLORS)
- SEALED CONCRETE, MATTE FIN
- SHEET LINOLEUM (ALLOW UP TO 4 COLORS)
- CORK TILE (WICANDER ON TATE ACCESS FLOOR SYSTEM)
- CONCRETE PLANKS (12" WIDE X 6' LONG)
- WALK OFF MAT

FINISH SCHEDULE & LEGEND | 1

PICO BRANCH LIBRARY

2201 Pico Blvd.
Santa Monica, CA 90404

PROJECT

KoningEizenbergArchitecture
1454 25th St, Santa Monica, CA 90404
310.828.6131 info@kearch.com
310.828.0719 fax www.kearch.com

ARCHITECT'S PROJECT NO.
1001

ARCHITECT

All designs, ideas, arrangements and plans indicated by these drawings are the property and copyright of the Architect and shall neither be used on any other work nor be disclosed to any other person for any use whatsoever without written permission.

Koning Eizenberg Architecture and/or its principals and employees waives any and all liability or responsibility for problems that may occur when these plans, drawings, specifications, and/or designs are followed without the professional's guidance with ambiguities, or conflicts which are alleged.

CONSULTANT

City of Santa Monica Architecture Services
1437 4TH STREET, SUITE 300
SANTA MONICA, CA 90401
TEL. (310) 458-2205
FAX. (310) 399-1541
architecture@smgov.net

DATE : _____ 20 __
SUBMITTED BY :

DATE : _____ 20 __
APPROVED BY :
Miriam Mulder,
Architecture Services Manager

CITY OF SANTA MONICA
DEPARTMENT OF PUBLIC WORKS

REVIEWED BY : DATE : _____ 20 __

REVIEWED BY : DATE : _____ 20 __

REVIEWED BY : DATE : _____ 20 __

CITY CLIENT

NO.	DATE	BY	DESCRIPTION

REVISIONS

ISSUE
65% CONSTRUCTION DOCUMENTS / BID SET

DATE
01/23/2012

DRAWING NO. **6693**

SHEET OF SHEETS

SHEET TITLE
FINISH PLAN & SCHEDULE

SHEET NO.
A9.60

SHEET OF

DWG NO. -

TITLE OF PROJECT:

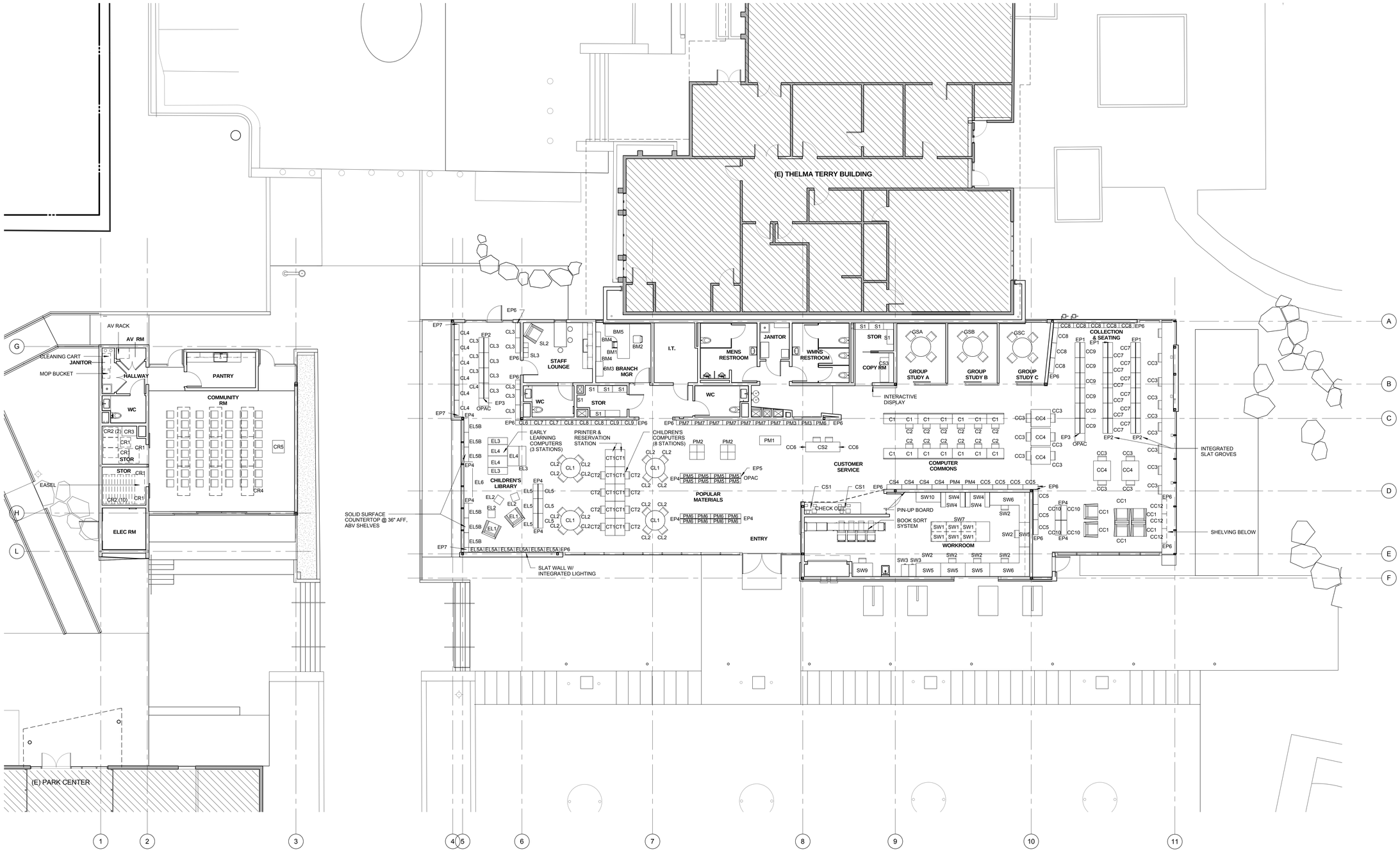

MAIN FLOOR FURNITURE PLAN | 0 2' 4' 8' | 1/8" = 1'-0" | 1

PICO BRANCH LIBRARY

2201 Pico Blvd.
Santa Monica, CA 90404

PROJECT

KoningEizenbergArchitecture
1454 25th St, Santa Monica, CA 90404

310.828.6131 info@kearch.com
310.828.0719 fax www.kearch.com

ARCHITECT'S PROJECT NO.
1001

ARCHITECT

All designs, ideas, arrangements and plans indicated by these drawings are the property and copyright of the Architect and shall neither be used on any other work nor be disclosed to any other person for any use whatsoever without written permission.

Koning Eizenberg Architecture and/or its principals and employees waives any and all liability or responsibility for problems that may occur when these plans, drawings, specifications, and/or designs are followed without the professional's guidance with ambiguities, or conflicts which are alleged.

CONSULTANT

City of Santa Monica Architecture Services

1437 4TH STREET, SUITE 300
SANTA MONICA, CA 90401
TEL. (310) 458-2205
FAX. (310) 399-1541
architecture@smgov.net

SUBMITTED BY : DATE : 20

APPROVED BY : DATE : 20
Miriam Mulder,
Architecture Services Manager

CITY OF SANTA MONICA
DEPARTMENT OF PUBLIC WORKS

REVIEWED BY : DATE : 20

REVIEWED BY : DATE : 20

REVIEWED BY : DATE : 20

CITY CLIENT

NO.	DATE	BY	DESCRIPTION

REVISIONS

ISSUE
65% CONSTRUCTION DOCUMENTS / BID SET

DATE
01/23/2012

DRAWING NO. **6693**

SHEET OF SHEETS

SHEET TITLE
FURNITURE PLAN

SHEET NO.
A9.70

SHEET OF

DWG NO. -

TITLE OF PROJECT

FURNITURE LEGEND

Revision per CD meeting #2

DESCRIPTION	SET	FURNITURE ITEMS INCLUDED	QUANTITY	MANUFACTURER	IMAGE
POPULAR MATERIALS	PM-1	BENCH (2 PERSONS) 52" X 22"d x 18"h	1	NELSON BENCH	
	PM-2	BOOK DISPLAY GONDOLA 3' x 3'	2	TBD	
	PM-3	SF, 90"h x 36"w x 12"d STEEL SHELVING W/ END PANELS. 6 SHELVES W/ 280 AUDIO BOOK CD-ROM	2	MONTEL	
	PM-4	SF,90"h x 36"w x 12"d STEEL SHELVING. 6 SHELVES W/ 320 LARGE PRINT W/ END PANELS	2	MONTEL	
	PM-5	DF, 66"h x 36"w x 12"d STEEL SHELVING. 4 SLIDING BROWSER BOXES W/600 AUDIO CD'S	6	MONTEL	
	PM-6	DF, PAPERBACK ROTOR TOWER, 66"h. 6 TIERS PER TOWER (could be 5.), 1,715 PAPERBACKS	8	MONTEL	
	PM-7	SF, UNIVERSAL DISPLAY SHELVES 90"h HOLDING 2,000 DVDS	8 sf		
CUSTOMER SERVICE	CS-1	SELF CHECK OUT MACHINE AND KIOSK. 36"w x 24"d x 48"h FREESTANDING	2	TBD	
	CS-2	CUSTOMER SERVICE DESK & CHAIR, 5' LONG	1	TBD	
	CS-3	FREESTANDING COPIER	1	TBD	
	CS-4	SF, SHELVING, 90"h x 36"w x 12"d W/7 SHELVES	4	MONTEL	
COLLECTION AND SEATING	CC-1	LOUNGE CHAIR, 36"w x 21"d	6	HERMAN MILLER SWOOP (OPT1), OR ALLERMUIR - FIFTY SERIES (OPT 2)	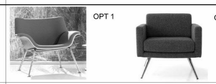 OPT 1 OPT 2
	CC-3	READER'S CHAIR 21"w x 21"d	18	TMC ENSHELL (OPT 1), KNOLL (OPT 2), HAYWORTH VERY (OPT 3), SOURCE TIER 490 (OPT 4), OR BERNHARDT DESIGN COAST (OPT 5)	OPT 1 OPT 2 OPT 3 OPT 4 OPT 5
	CC-4	READER'S TABLE 48"w x 42"w x 28.5"h (2 PERSONS)	5	HIVE MODERN (OPT 1), TMC FLICK (OPT 2), LELAND MARQUETTE (OPT 3), OR SPARKEOLOGY "CAL" (OPT 4)	OPT 1 OPT 2 OPT 3 OPT 4
	CC-5	SF, 90"h STEEL SHELVING W/6 SHELVES. 36"w x 12"d (1,200 TEEN COLLECTIONS)	7	MONTEL	
	CC-6	SF, 24"h STEEL SHELVING W/6 SHELVES. 36"w x 24"d (144 REFERENCE). *SEE PLAN FOR END PANEL LOCATIONS	2	MONTEL	
	CC-7	DF 90"h STEEL SHELVING W/12 SHELVES. 36"w x 24"d (4,250 NON-FICTION)	12	MONTEL	
	CC-8	SF 90"h STEEL SHELVING W/12 SHELVES. 36"w x 24"d (1,960 SPANISH LANGUAGE)	8	MONTEL	
	CC-9	DF 90"h STEEL SHELVING W/12 SHELVES. 36"w x 24"d (2,100 FICTION)	6	MONTEL	
	CC-10	66"h x 36"w x 14"d SHELVING W/4 SHELVES (48 CURRENT MAGAZINES).	2	MONTEL	
	CC-11	NOT USED			
	CC-12	30"h x 36"w x 12"d NEWSPAPER SHELVING W/2 SHELVES (9 CURRENT NEWSPAPERS). SLOPING SHELF	3	MONTEL	
GROUP STUDY ROOMS	GS-A	CHAIR AT TABLE	4	TMC ENSHELL (OPT 1), KNOLL (OPT 2), HAYWORTH VERY (OPT 3), SOURCE TIER 490 (OPT 4), OR BERNHARDT DESIGN COAST (OPT 5)	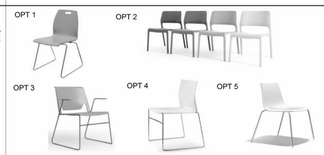 OPT 1 OPT 2 OPT 3 OPT 4 OPT 5
		TABLE, GROUP STUDY, 48"dia x 29"h (4 PERSONS)	1	HIVE MODERN	
	WB	WHITE BOARD 4' X 10' ERASABLE MARKER BOARD	1	TBD	
	GS-B	CHAIR AT TABLE	4		
		TABLE, GROUP STUDY, 48"dia x 29"h (4 PERSONS)	1		
	WB	WHITE BOARD 4' X 10' ERASABLE MARKER BOARD	1	TBD	
	GS-C	CHAIR AT TABLE	4		
		TABLE, GROUP STUDY, 48"dia x 29"h (4 PERSONS)	1		
	WB	WHITE BOARD 4' X 10' ERASABLE MARKER BOARD	1	TBD	
COMMONS AREA	C-1	TECHNOLOGY TABLE (42"w x 24"d x 29"h)	14	AGATI ELEMENTS W/ MODESTY & PRIVACY PANELS (OPT 1), ALLSTEEL "GET TABLE" (OPT 2), SPARKEOLOGY "STU" (OPT 3), OR HERMAN MILLER "SENSE" (OPT 4)	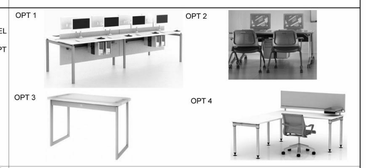 OPT 1 OPT 2 OPT 3 OPT 4
	C-2	TASK CHAIR	12	KX POLYSHELL BY BIOFIT (OPT 1), ALLSTEEL INSPIRE (OPT 2), OR KNOLL TASK (OPT 3)	OPT 1 OPT 2 OPT 3
CHILDREN'S LIBRARY	CL-1	TABLE, JUVENILLE, 48"dia x 27"h (4 PERSONS), RESIN	4	HIVE MODERN (OPT 1), OR LELAND MARQUETTE LITTLE (OPT 2)	OPT 1 OPT 2
	CL-2	CHAIR	16	TMC ENSHELL (OPT 1), KNOLL (OPT 2), HAYWORTH VERY (OPT 3), SOURCE TIER 490 (OPT 4), OR BERNHARDT DESIGN COAST (OPT 5)	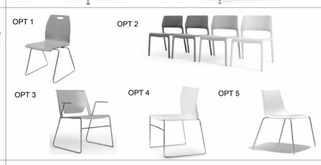 OPT 1 OPT 2 OPT 3 OPT 4 OPT 5
	CL-3	SF 66"h x 36"w x 12"d STEEL SHELVING W/4 SHELVES (2,250 JUVENILLE NON-FICTION)	12	MONTEL	
	CL-4	SF 66"h x 36"w x 12"d STEEL SHELVING W/5 SHELVES (1,680 JUVENILLE FICTION)	7	MONTEL	
	CL-5	SF 45"h x 36"w x 12"d STEEL SHELVING W/5 SHELVES (630 CHILDREN'S EASY READERS)	3	MONTEL	
	CL-6	SF 66"h x 36"w x 12"d SHELVING W/4 SHELVES (12 CURRENT CHILDREN MAGAZINES)	1	MONTEL	
	CL-7	66"h x 36"w x 12"d SF W/4 SLIDING BROWSER BOXES, 96 AUDIO CD'S/BOX, 350 COMPACT DISKS	2	MONTEL	
	CL-8	PAPERBACK ROTOR TOWER SF 66" SHELVING UNIT, 2 TOWER W/6 TIERS PER TOWER (840 CHILDREN'S PAPERBACKS)	3	MONTEL	
	CL-9	66"h DF UNIVERSAL DISPLAY SHELVES, SHELVING UNIT DISPLAY SLOTTED FOR 780 DVDS (W/ END PANELS)	2	MONTEL	

3FORM PANELS

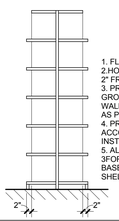

1. FLUSH BASE SHELVING , CANTILEVER.
2.HOLD END PANELS & CANOPY TOP IN 2" FROM ENDS OF SHELVING.
3. PROVIDE CUSTOM 3FORM PANEL W/ GROOVES TO ACCOMODATE "SLAT WALL" SYSTEM COMPONENT INSERTION AS PER PLAN.
4. PROVIDE 3FORM END PANEL TO ACCOMODATE "OPAC" EQUIPMENT INSTALL AS PER PLAN.
5. ALLOW FOR CUSTOM COLOR ON 3FORM ECO RESIN. THICKNESS TBD BASED ON STABILITY GIVEN HEIGHT OF SHELVING.

CORIAN PANELS

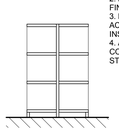

1. FLUSH BASE, CANTILEVER SHELVING.
2. END PANEL & CANOPY TOP FLUSH FINISH TO ENDS OF SHELVING.
3. PROVIDE END PANEL TO ACCOMODATE "OPAC" EQUIPMENT INSTALL AS PER PLAN.
4. ALLOW FOR CUSTOM COLOR ON CORIAN, THICKNESS TBD BASED ON STABILITY GIVEN HEIGHT OF SHELVING.

STEEL PANELS

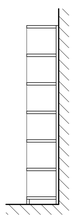

1. FLUSH BASE SHELVING , CANTILEVER.
2. END PANEL & CANOPY TOP FLUSH FINISH TO ENDS OF SHELVING.
3. PROVIDE "FALSE PANELS" AS PER PLAN TO COVER GAPS BETWEEN ALCOVE WALLS AND SHELVING..

CHILDREN'S TECHNOLOGY	CT-1	TECHNOLOGY TABLE 42"w x 24"d x 29"h	10	AGATI ELEMENTS W/ MODESTY & PRIVACY PANELS (OPT 1), ALLSTEEL "GET TABLE" (OPT 2), SPARKEOLOGY "STU" (OPT 3), OR HERMAN MILLER "SENSE" (OPT 4)	OPT 1 OPT 2 OPT 3 OPT 4
	CT-2	TASK CHAIR	8	KX POLYSHELL BY BIOFIT (OPT 1), ALLSTEEL INSPIRE (OPT 2), OR KNOLL TASK (OPT 3)	OPT 1 OPT 2 OPT 3
EARLY LITERACY AREA	EL-1	CHAIR AND A HALF	2	KNOLL	
	EL-2	CHILDREN'S SOFT SCULPTED FURNTIURE	3	GEHRY KIDS FURNITURE (OPT 1), STEELCASE RIPPLE (OPT 2)	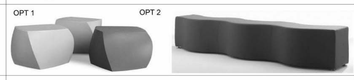 OPT 1 OPT 2
	EL-3	TECHNOLOGY BENCH 48"w x 16"h	3	TBD	
	EL-4	TECHNOLOGY TABLE FOR EARLY LEARNING COMPUTERS (28"d x 48"w x 25"h)	3	TBD	
	EL-5A	SF 45"h x 36"w x 24"d STEELSHELVING (2,500 CHILDREN'S PICTURE BOOKS)	6		
	EL-5B	SF 36"h x 36"w x 12"d STEELSHELVING (2,500 CHILDREN'S PICTURE BOOKS)	6		
	EL-6	BENCH, 6' long x 15"h	1	TBD	
SUPPORT SERVICES	AM	AUTOMATED MATERIALS HANDLING SYSTEM, 4 BIN SORTER WITH STAFF INDUCTION AND 1 CUSTOM STATION	1		
BRANCH MANAGER	BM-1	SUPERVISOR'S CHAIR	1	(SAME AS TASK CHAIR)	
	BM-2	VISITORS CHAIR	1	ENSHELL	
	BM-3	LATERAL 4 DRAWER FILE CABINET 36"w x 18"d x 52"h	1	MONTEL	
	BM-4	SHELVING, SF 84"h x 36"w x 12"d STEEL W/6 SHELVES	2	MONTEL	
	BM-5	OFFICE WORKSTATION	1	TBD	
LIBRARY STORAGE	S-1	STORAGE SHELVING 36"w x 16"d x 90"h (ROOMS 107 & 117)	8	MONTEL	
	S-2	STORAGE SHELVING, WALL STANDARDS & BRACKETS, 64"w x 18"d x 90"h	1	KNAPP-VOIGHT	
STAFF LOUNGE	SL-1	CAFÉ CHAIR	2	SPARKEOLOGY "AL" AND "PETE"	
	SL-2	LOUNGE CHAIR	1	HERMAN MILLER SWOOP (OPT1), OR ALLERMUIR - FIFTY SERIES (OPT 2)	OPT 1 OPT 2
	SL-3	LOCKERS 12"w x 12"d x 62"h	1	TBD	
		BULLETIN BOARD	1		
STAFF SERVICES WORKROOM	SW-1	BOOK TRUCK 36"w x 24"d	6	TBD	
	SW-2	OFFICE CHAIR	6	(SAME AS TASK CHAIR)	
	SW-3	VERTICAL 4 DRAWER FILING CABINET (18"w x 36"d x 10"h)	2	TBD	
	SW-4	SHELVING SF 90"h x 36"w X 12"d STEEL W/7 SHELVES	4	MONTEL	
	SW-5	CLERICAL COUNTER WORKSTATION 5'w x 30"d	4	HERMAN MILLER CANVAS OFFICE (OPT 1), ALLSTEEL - ALIGH OFFICE STATION (OPT 2), AND HERMAN MILLER VERY TASK (OPT 3)	OPT 1 OPT 2 OPT 3
	SW-6	OFFICE SYSTEM WORKSTATION, SEE PLAN	2	TBD	
	SW-7	WORKSURFACE W/ BOOK TRUCKS BELOW 4'w x 12'long x REQ'D	1	ALL STEEL	
	SW-8	FILE CABINET (VERTICAL) 18"w x 29"d x 52"h	2		
	SW-9	COMPUTER WORKSTATION	1		
	SW-10	TALL CABINET 5'w x 2'd	1		
		BULLETIN BOARD	1		
		IN & OUT BOARD	1		
		KEY CABINET	1		
		SAFE (FLOOR) 12"w x 14"d x 21"h	1		
		WASTE BASKET 13"w x 15"d x 15"h	6		
		WHITE BOARD 48"w x 36"h	1		
COMMUNITY ROOM	CR-1	DOLLY CHAIR 24"w x 36"d (CHAIRS STACKED)	5		
	CR-2	MEETING TABLE 70"w x 31"d x 29"h (FOLDING/ NESTING)	12	ALLSTEEL GET TABLE	
	CR-3	INDUSTRIAL SHELVING SF 36"w x 24"d x 84" W/6 SHELVES	1		
	CR-4	MEETING ROOM CHAIRS 25"w x 21"d (STACKING)	50	KNOLL	
	CR-5	LECTURN 31"w x 29"d W/ MICROPHONE, LIGHT, SPEAKER, & CLOCK	1		
		FLIP CHART WISTAND	1		

EQUIPMENT LEGEND

DESCRIPTION	SET	FURNITURE ITEMS INCLUDED	QUANTITY
CUSTOMER SERVICE		CHANGE MACHINE	1
		VENDOR CARD ENCODER/DISPENSER	1
		CASH REGISTER	1
		COPIER, COLOR FREESTANDING	1
GROUP STUDY ROOMS		CLOCK, WALL-MOUNTED (1 PER STUDY ROOM)	3
COMMONS AREA		LG LCD DISPLAY	1
BRANCH MANAGER		CLOCK, WALL-MOUNTED	1
STAFF LOUNGE		COFFEE MAKER/ URN	1
		MICROWAVE OVEN	1
		REFRIGERATOR	1
STAFF SERVICES WORKROOM		CLOCK, WALL-MOUNTED	1
CUSTODIAL		LADDER, STEP	1
KITCHENETTE		MICROWAVE OVEN	1
		REFRIGERATOR	1
COMMUNITY ROOM		CLOCK, WALL-MOUNTED	1
		PROJECTION SCREEN, WALL-MOUNTED	1
		PROJECTOR, CLG-MOUNTED	1

GENERAL NOTES:
1. SEE FURNITURE PLAN ON SHEET A9.91 FOR LOCATIONS OF END PANELS (EP).

END PANEL SCHEDULE:
EP1 - 3 FORM ECO RESIN (CUSTOM COLOR)
EP2 - 3 FORM W/ GROOVES, MILLED FOR INSTALL/ USE W/ "SLATWALL" COMPONENTS
EP3 - 3FORM W/ OPAC EQUIPMENT INTEG
EP4 - CORIAN SOLID SURFACE
EP5 - CORIAN SOLID SURF W/ OPAC INTEG
EP6 - STEEL
EP7 - "FALSE" PANELS

NOTES:
1. ALL SHELVING W/ CANOPY TOP MATERIAL TO MATCH END PANEL, WIDTH TO MATCH END PANELS.
2. END PANELS ON ALL SHELVING AGAINST WALL TO BE FULL DEPTH OF BASE SHELF.
3. END PANELS ON ALL FREE STANDING SHELVING TO BE 2" LESS THAN THE DEPTH OF THE UPPER SHELF, BOTH SIDES.
4. PROVIDE SINGLE (ONE LARGE) END PANEL AT DOUBLE SIDED SHELVING.

PICO BRANCH LIBRARY

2201 Pico Blvd.
Santa Monica, CA 90404

PROJECT

KoningEizenbergArchitecture
1454 25th St, Santa Monica, CA 90404
310.828.6131 info@kearch.com
310.828.0719 fax www.kearch.com

ARCHITECT'S PROJECT NO.
1001

ARCHITECT

All designs, ideas, arrangements and plans indicated by these drawings are the property and copyright of the Architect and shall neither be used on any other work nor be disclosed to any other person for any use whatsoever without written permission.

Koning Eizenberg Architecture and/or its principals and employees waives any and all liability or responsibility for problems that may occur when these plans, drawings, specifications, and/or designs are followed without the professional's guidance with ambiguities, or conflicts which are alleged.

CONSULTANT

City of Santa Monica Architecture Services
1437 4TH STREET, SUITE 300
SANTA MONICA, CA 90401
TEL. (310) 458-2205
FAX. (310) 399-1541
architecture@smgov.net

DATE : _____ 20 __
SUBMITTED BY :

DATE : _____ 20 __
APPROVED BY :
Miriam Mulder,
Architecture Services Manager
CITY OF SANTA MONICA
DEPARTMENT OF PUBLIC WORKS

REVIEWED BY : DATE : _____ 20 __

REVIEWED BY : DATE : _____ 20 __

REVIEWED BY : DATE : _____ 20 __

CITY CLIENT

NO.	DATE	BY	DESCRIPTION

REVISIONS

ISSUE
65% CONSTRUCTION DOCUMENTS / BID SET

DATE
01/23/2012

DRAWING NO. **6693**

SHEET OF SHEETS

SHEET TITLE
FURNITURE LEGEND

SHEET NO.
A9.71

SHEET OF

DWG. NO. - -

TITLE OF PROJECT

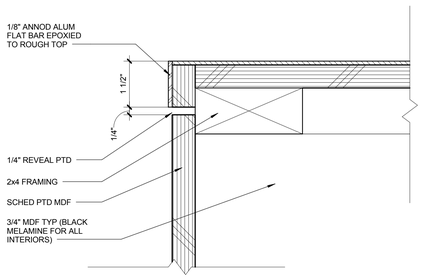

PLASTIC LAMINATE COUNTERTOP EDGE | 0 1/2" 1" 2" | 6" = 1'-0" | 6

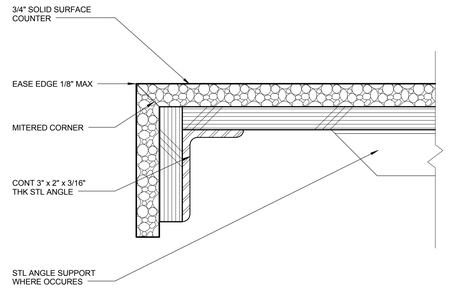

SOLID SURFACE COUNTER EDGE | 0 1/2" 1" 2" | 6" = 1'-0" | 3

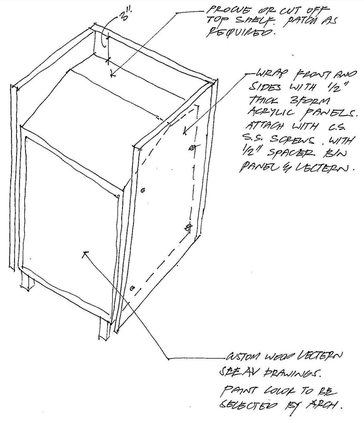

LECTURN WRAP | N.T.S. | 8

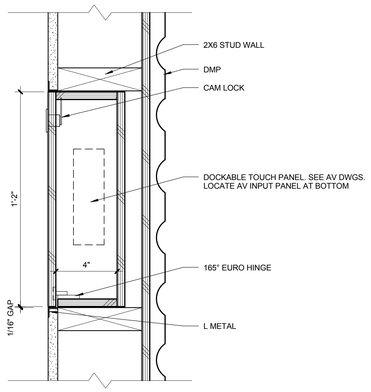

AV CABINET | 0 1" 2" 4" | 3" = 1'-0" | 5

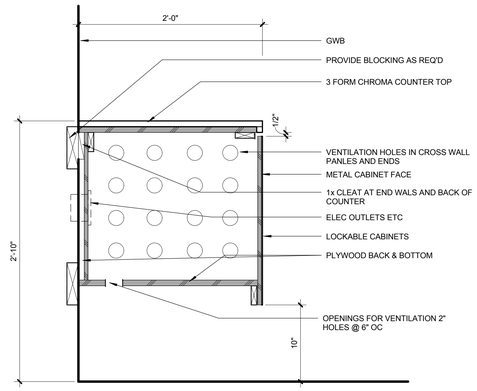

SELF CHECK-OUT COUNTER | 0 2" 4" 6" 8" | 1 1/2" = 1'-0" | 2

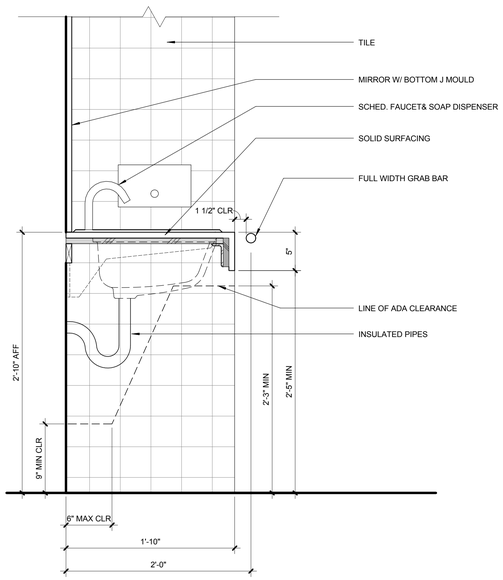

SINK @ RESTROOM COUNTER | 0 2" 4" 6" 8" | 1 1/2" = 1'-0" | 7

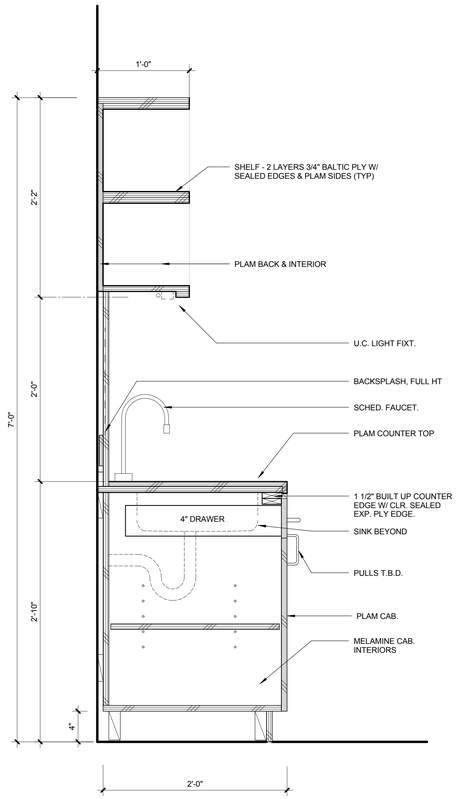

LOUNGE COUNTER | 0 2" 4" 6" 8" | 1 1/2" = 1'-0" | 4

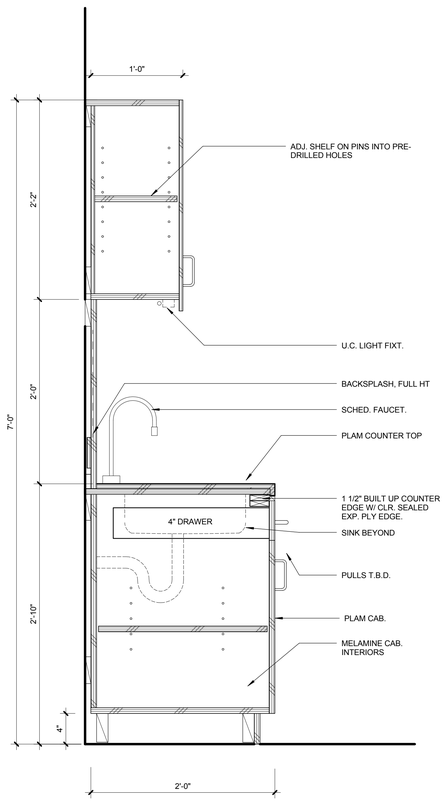

PANTRY COUNTER | 0 2" 4" 6" 8" | 1 1/2" = 1'-0" | 1

SHEET OF

DWG NO. -

TITLE OF PROJECT:

PICO BRANCH LIBRARY

2201 Pico Blvd.
Santa Monica, CA 90404

PROJECT

KoningEizenbergArchitecture
1454 25th St, Santa Monica, CA 90404

310.828.6131 info@kearch.com
310.828.0719 fax www.kearch.com

ARCHITECT'S PROJECT NO.
1001

ARCHITECT

All designs, ideas, arrangements and plans indicated by these drawings are the property and copyright of the Architect and shall neither be used on any other work nor be disclosed to any other person for any use whatsoever without written permission.

Koning Eizenberg Architecture and/or its principals and employees waives any and all liability or responsibility for problems that may occur when these plans, drawings, specifications, and/or designs are followed without the professional's guidance with ambiguities, or conflicts which are alleged.

CONSULTANT

City of Santa Monica Architecture Services

1437 4TH STREET, SUITE 300
SANTA MONICA, CA 90401
TEL. (310) 458-2205
FAX. (310) 399-1541
architecture@smgov.net

DATE : _____ 20 __
SUBMITTED BY :

DATE : _____ 20 __
APPROVED BY :
Miriam Mulder,
Architecture Services Manager

CITY OF SANTA MONICA
DEPARTMENT OF PUBLIC WORKS

REVIEWED BY : DATE : _____ 20 __

REVIEWED BY : DATE : _____ 20 __

REVIEWED BY : DATE : _____ 20 __

CITY CLIENT

NO.	DATE	BY	DESCRIPTION

REVISIONS

ISSUE
65% CONSTRUCTION DOCUMENTS / BID SET

DATE
01/23/2012

DRAWING NO. **6693**

SHEET OF SHEETS

SHEET TITLE
MILLWORK DETAILS

SHEET NO.
A9.80

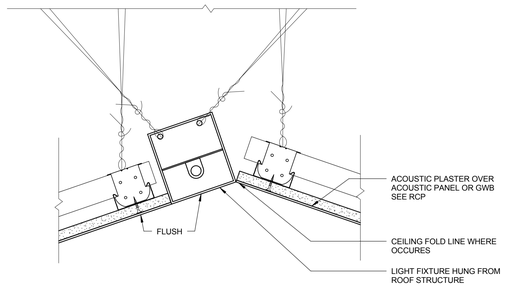

LIGHT IN CEILING 0 1" 2" 4" 3" = 1'-0" **8**

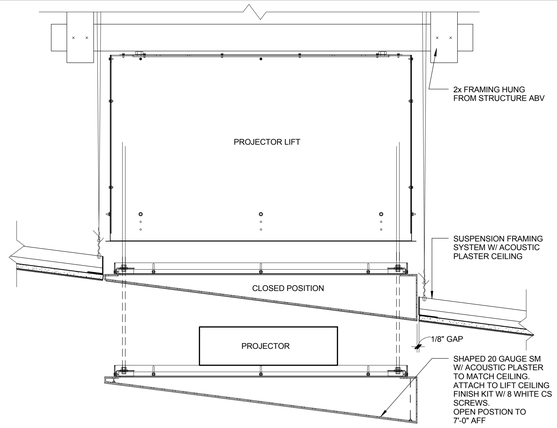

PROJECTOR LIFT 0 2" 4" 6" 8" 1 1/2" = 1'-0" **4**

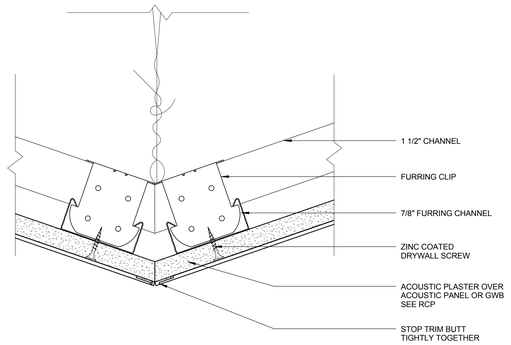

ACOUSTIC PLASTER RIDGE FOLD 0 1/2" 1" 2" 6" = 1'-0" **7**

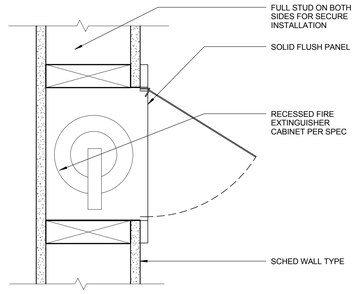

RECESSED FE CABINET 0 1" 2" 4" 3" = 1'-0" **3**

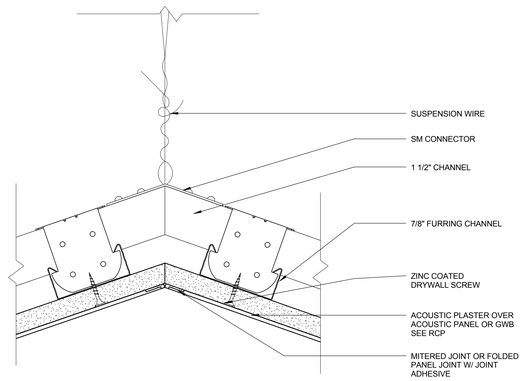

ACOUSTIC PLASTER VALLEY FOLD 0 1/2" 1" 2" 6" = 1'-0" **6**

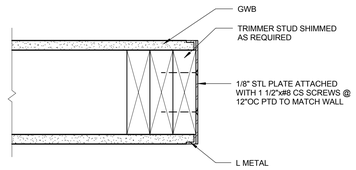

STEEL PLATE WALL PROTECTION 0 1" 2" 4" 3" = 1'-0" **2**

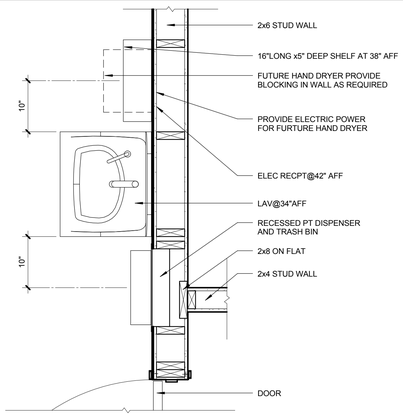

PLAN DETAIL MO BATHROOM LAV 0 3" 6" 1' 1" = 1'-0" **9**

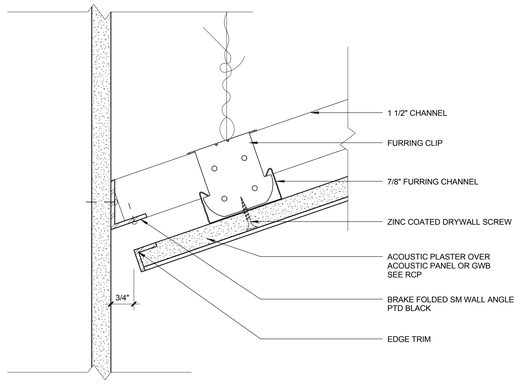

ACOUSTIC PLASTER CEILING TO WALL 0 1/2" 1" 2" 6" = 1'-0" **5**

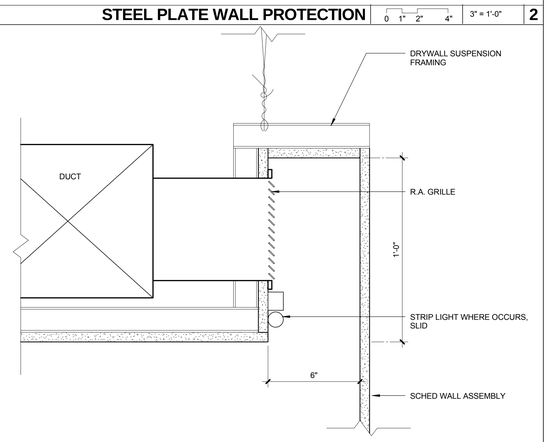

LIGHT/ RETURN AIR RECESS 0 1" 2" 4" 3" = 1'-0" **1**

PICO BRANCH LIBRARY

2201 Pico Blvd.
Santa Monica, CA 90404

PROJECT

KoningEizenbergArchitecture
1454 25th St, Santa Monica, CA 90404

310.828.6131 info@kearch.com
310.828.0719 fax www.kearch.com

ARCHITECT'S PROJECT NO.
1001

ARCHITECT

All designs, ideas, arrangements and plans indicated by these drawings are the property and copyright of the Architect and shall neither be used on any other work nor be disclosed to any other person for any use whatsoever without written permission.

Koning Eizenberg Architecture and/or its principals and employees waives any and all liability or responsibility for problems that may occur when these plans, drawings, specifications, and/or designs are followed without the professional's guidance with ambiguities, or conflicts which are alleged.

CONSULTANT

City of Santa Monica Architecture Services

1437 4TH STREET, SUITE 300
SANTA MONICA, CA 90401
TEL. (310) 458-2205
FAX. (310) 399-1541
architecture@smgov.net

DATE : _____ 20 __
SUBMITTED BY :

DATE : _____ 20 __
APPROVED BY :
Miriam Mulder,
Architecture Services Manager

CITY OF SANTA MONICA
DEPARTMENT OF PUBLIC WORKS

REVIEWED BY : DATE : _____ 20 __

REVIEWED BY : DATE : _____ 20 __

REVIEWED BY : DATE : _____ 20 __

CITY CLIENT

NO.	DATE	BY	DESCRIPTION

REVISIONS

ISSUE
65% CONSTRUCTION DOCUMENTS / BID SET

DATE
01/23/2012

DRAWING NO. **6693**

SHEET OF SHEETS

SHEET TITLE
INTERIOR DETAILS

SHEET NO.
A9.90

SHEET OF

DWG NO. -

TITLE OF PROJECT :

GR GENERAL REQUIREMENTS

GR-1 AS USED IN THESE GENERAL NOTES:
"DRAWINGS" MEANS THE LATEST STRUCTURAL DESIGN DRAWINGS, UON.
"SPECIFICATIONS" MEANS THE LATEST PROJECT SPECIFICATIONS, UON.
"CONTRACT DOCUMENTS" IS DEFINED AS THE DESIGN DRAWINGS AND THE SPECIFICATIONS.
"SER" IS DEFINED AS THE STRUCTURAL ENGINEER OF RECORD FOR THE STRUCTURE IN ITS FINAL CONDITION.
"DESIGN PROFESSIONALS" IS DEFINED AS THE OWNER'S ARCHITECT AND SER.
"MEP" INCLUDES, BUT IS NOT LIMITED TO MECHANICAL, ELECTRICAL, PLUMBING, FIRE PROTECTION.
"CONTRACTOR" IS DEFINED TO INCLUDE ANY OF THE FOLLOWING: GENERAL CONTRACTOR AND THEIR SUBCONTRACTORS, CONSTRUCTION MANAGER AND THE SUBCONTRACTORS, STRUCTURAL STEEL FABRICATOR OR STRUCTURAL STEEL ERECTOR.
"BASE BUILDING STRUCTURE" IS DEFINED AS THE STRUCTURAL FRAME DESIGNED BY THORNTON TOMASETTI.
"STRUCTURE IN ITS FINAL CONDITION" MEANS ALL STRUCTURAL ELEMENTS SHOWN ON THE STRUCTURAL CONTRACT DOCUMENTS ARE INSTALLED AND COMPLETELY CONNECTED AND INSPECTED WITH NO OUTSTANDING NON-COMPLIANCE ISSUES.

GR-2 THE CONTRACTOR IS RESPONSIBLE FOR COORDINATION OF THE STRUCTURAL WORK WITH THE ARCHITECTURAL, CIVIL, MEP CONTRACT DOCUMENTS, AS WELL AS ANY OTHER APPLICABLE TRADES.

GR-3 THE CONTRACTOR IS RESPONSIBLE FOR THE STABILITY OF THE STRUCTURE UNTIL THE CONSTRUCTION OF THE STRUCTURE REACHES ITS FINAL CONDITION.

GR-4 THE CONTRACTOR IS SOLELY RESPONSIBLE FOR THE DESIGN, INSTALLATION, AND REMOVAL OF TEMPORARY BRACING AND CONSTRUCTION SUPPORTS, FOR NEW AND EXISTING STRUCTURES, AS NECESSARY TO COMPLETE THE PROJECT. NO PORTION OF THE PROJECT WHILE UNDER CONSTRUCTION IS INTENDED TO BE STABLE IN THE ABSENCE OF THE CONTRACTOR'S TEMPORARY SUPPORTS AND BRACES. CONTRACTOR SHALL RETAIN A STRUCTURAL ENGINEER LICENSED IN THE STATE IN WHICH THE PROJECT IS LOCATED TO DESIGN TEMPORARY BRACING AND CONSTRUCTION SUPPORTS.

GR-5 LATERAL LOAD RESISTANCE AND STABILITY OF THE STRUCTURE IN ITS FINAL CONDITION IS PROVIDED BY SHEARWALLS AND LATERAL STABILITY OF OTHER ELEMENTS IS PROVIDED THROUGH ROOF SHEATHING.

GR-6 THE SPECIFICATIONS ARE AN INTEGRAL PART OF THE CONTRACT DOCUMENTS AND SHALL BE USED IN CONJUNCTION WITH THE STRUCTURAL DRAWINGS.

GR-7 THE CONTRACTOR SHALL VERIFY ALL EXISTING DIMENSIONS AND CONDITIONS AND COORDINATE WITH THE STRUCTURAL DRAWINGS, ARCHITECTURAL DRAWINGS, DRAWINGS FROM OTHER CONSULTANTS, PROJECT SHOP DRAWINGS AND FIELD CONDITIONS.

GR-8 IN CASES OF CONFLICT BETWEEN DRAWINGS AND/OR SPECIFICATIONS AND OTHER DISCIPLINES OR EXISTING CONDITIONS, CONTRACTOR SHALL NOTIFY THE DESIGN PROFESSIONALS AND OBTAIN CLARIFICATION PRIOR TO BIDDING AND PROCEEDING WITH WORK.

GR-9 APPLY DETAILS, SECTIONS, AND NOTES ON THE DRAWINGS WHERE CONDITIONS ARE SIMILAR TO THOSE INDICATED BY DETAIL, DETAIL TITLE OR NOTE.

GR-10 ONLY USE DIMENSIONS INDICATED ON THE DRAWINGS. DO NOT SCALE DRAWINGS.

GR-11 ASSUME EQUAL SPACING BETWEEN ESTABLISHED DIMENSIONS, IF NOT INDICATED ON DRAWINGS.

GR-12 CENTERLINES OF COLUMNS AND FOUNDATIONS COINCIDE WITH GRID LINE INTERSECTIONS, UON.

GR-13 CENTERLINES OF GRADE BEAMS AND WALLS COINCIDE WITH CENTERLINES OF FOUNDATIONS, UON.

GR-14 CENTERLINES OF FRAMING MEMBERS COINCIDE WITH COLUMN CENTERLINES, UON.

GR-15 THE CONTRACTOR SHALL PROTECT EXISTING FACILITIES, STRUCTURES AND UTILITIES FROM DAMAGE.

GR-16 THE CONTRACTOR SHALL VERIFY THAT CONSTRUCTION LOADS DO NOT EXCEED THE CAPACITY OF THE STRUCTURE AT THE TIME THE LOAD IS APPLIED.

GR-17 THE CONTRACTOR SHALL COORDINATE THE BOTTOM OF BASE PLATE ELEVATIONS WITH THE AS-BUILT TOP OF SUPPORT ELEVATIONS.

GR-18 THE CONTRACTOR SHALL VERIFY ALL OPENING SIZES AND LOCATIONS WITH OTHER DISCIPLINES. THE DRAWINGS DO NOT SHOW ALL OPENINGS REQUIRED. ADDITIONAL OPENINGS, BLOCKOUTS AND SLEEVES MAY BE REQUIRED BY OTHER DISCIPLINES AND SHALL BE CONSTRUCTED USING THE TYPICAL DETAILS AND/OR THE CRITERIA INDICATED ON THE DRAWINGS. OPENINGS REQUIRED BUT NOT SHOWN ON THE STRUCTURAL DRAWINGS MUST BE APPROVED BY THE STRUCTURAL ENGINEER.

GR-19 NOT USED.

GR-20 SEE ARCHITECTURAL, CIVIL, AND MEP CONTRACT DOCUMENTS FOR ADDITIONAL INFORMATION RELATING TO THE COORDINATION OF STRUCTURAL COMPONENTS INCLUDING, BUT NOT LIMITED TO:

CIVIL:
SITING OF BUILDING GRID LINES WITH RESPECT TO CITY BENCHMARKS
SITE PREPARATION
BACKFILLING MATERIALS AND REQUIREMENTS
PAVING AND SITE ELEMENTS OUTSIDE OF BUILDING ENVELOPE
NEW AND EXISTING SITE UTILITIES

ARCHITECTURAL:
PLAN DIMENSIONS AND PROJECT DATUM
SLAB EDGE DIMENSIONS
FINISH ELEVATIONS
WATERPROOFING AND DAMP-PROOFING DETAILS
RAMP GEOMETRY, PITS, SLAB SLOPES AND DEPRESSIONS
EMBEDMENTS, INSERTS, BLOCKOUTS, ETC.
EXACT OPENING SIZES FOR PIPES, DUCTS, ETC.
CONCRETE FINISHES AND TOPPING SLABS
CONCRETE CURBS AND HOUSEKEEPING PADS
INTERIOR NON-STRUCTURAL MASONRY PARTITIONS
FIRE RATINGS
OPERABLE PARTITIONS

MEP:
PIPE AND DUCT SIZES FOR OPENING AND SLEEVE COORDINATION
FLOOR DRAINS
UNDERFLOOR AND PERIMETER DRAINAGE SYSTEMS
EQUIPMENT CURBS
CONDUITS AND EMBEDMENTS IN WALLS AND SLABS

CD CODES AND DESIGN CRITERIA

CD-1 PERFORM ALL CONSTRUCTION IN CONFORMANCE WITH THE BUILDING AND DESIGN CODES REFERENCED WITHIN THESE DOCUMENTS. THE PROJECT DOCUMENTS REFER TO THE FOLLOWING CODES AND STANDARDS, UON:

2010 CALIFORNIA BUILDING CODE (CBC) REFERENCING THE 2009 INTERNATIONAL BUILDING CODE, WITH SANTA MONICA MUNICIPAL CODE AMENDMENTS

STRUCTURAL CONCRETE:
"BUILDING CODE REQUIREMENTS FOR STRUCTURAL CONCRETE" THE AMERICAN CONCRETE INSTITUTE (ACI 318-2008)

STRUCTURAL STEEL:
"SPECIFICATION FOR STRUCTURAL STEEL BUILDINGS", MARCH 9, 2005 THIRTEENTH EDITION CONFORMING TO THE PROVISIONS OF LOAD RESISTANCE FACTOR DESIGN, BY THE AMERICAN INSTITUTE OF STEEL CONSTRUCTION (AISC-LRFD)

WOOD:
NATIONAL DESIGN SPECIFICATION FOR WOOD CONSTRUCTION" AMERICAN NATIONAL STANDARDS INSTITUTE / AMERICAN FOREST & PAPER ASSOCIATION (ANSI/AF&PA NDS-2005)

CD-2 LIVE LOADS:

ROOFS	20 PSF

CD-3 SUPERIMPOSED DEAD LOADS:

ROOFING, MEP, CEILING	18 PSF

CD-4 SNOW LOADS:
N/A

CD-5 WIND LOAD DESIGN DATA:

MAIN WIND FORCE RESISTING SYSTEM	
BASIC WIND SPEED, V	85 MPH
EXPOSURE	C
WIND IMPORTANCE FACTOR (Iw)	1.0
TOPOGRAPHIC FACTOR	1.0
BUILDING OCCUPANCY CATEGORY	II
INTERNAL PRESSURE COEFFICIENT	± 18 (ENCLOSED)

CD-6 SEISMIC LOAD DESIGN DATA:

SEISMIC IMPORTANCE FACTOR (I)	1.0
SEISMIC USE GROUP	
S_S	1.17 g
S_1	0.415 g
S_{DS}	1.009 g
S_{D1}	0.724 g
SITE CLASS	D
SEISMIC DESIGN CATEGORY	D
ANALYSIS PROCEDURE DESCRIPTION	EQUIVALENT LATERAL FORCE

SEISMIC LOAD RESISTING SYSTEM (SLRS) :	LIGHT-FRAMED WOOD SHEARWALL
RESPONSE MODIFICATION FACTOR (R)	6.5
SYSTEM OVERSTRENGTH (Ω_0)	3
DEFLECTION AMPLIFICATION FACTOR (C_D)	4
SEISMIC RESPONSE COEFFICIENT (C_S)	0.155

SEISMIC LOAD RESISTING SYSTEM (SLRS) :	SPECIAL REINFORCED MASONRY SHEARWALL
RESPONSE MODIFICATION FACTOR (R)	5
SYSTEM OVERSTRENGTH (Ω_0)	2 1/2
DEFLECTION AMPLIFICATION FACTOR (C_D)	3 1/2
SEISMIC RESPONSE COEFFICIENT (C_S)	0.202

LONGITUDE:	-118.4673
LATITUDE:	34.0203

CD-7 IN CASES WHERE THE CONTRACTOR DETERMINES THAT SUSPENDED OR FLOOR MOUNTED MEP EQUIPMENT LOADS EXIST WHICH EXCEED DESIGN LOADS INDICATED ON CONTRACT DOCUMENTS, CONTRACTOR SHALL SUBMIT LOAD DATA TO DESIGN PROFESSIONALS FOR REVIEW PRIOR TO PROCEEDING WITH WORK.

CD-8 DISTRIBUTE THE MAXIMUM LOAD HUNG FROM ANY STRUCTURAL MEMBER FOR MEP DUCTWORK, PIPING ETC OVER THE MEMBER'S TRIBUTARY AREA IN A WAY THAT THE DESIGN SUPERIMPOSED DEAD LOADS LISTED IN CONTRACT DOCUMENTS ARE NOT EXCEEDED. THE CONTRACTOR SHALL COORDINATE THE LOADS OF ALL TRADES AND PROVIDE ADDITIONAL SUPPORT OR DISTRIBUTION FRAMING AS REQUIRED TO ACHIEVE THE ALLOWABLE LOAD DISTRIBUTION.

CD-9 STRUCTURAL COMPONENTS ARE NOT DESIGNED FOR VIBRATING EQUIPMENT. MOUNT VIBRATING EQUIPMENT ON VIBRATION ISOLATORS.

CD-10 SERVICEABILITY:
LIVE LOAD DEFLECTION IS LESS THAN L/360

EXTERIOR SPANDRELS HAVE BEEN DESIGNED TO LIMIT LIVE LOAD MIDSPAN VERTICAL DEFLECTION TO 1/360 OF THE SPAN OR 1/2", WHICHEVER IS LESS.

CD-11 CONNECTIONS OF SYSTEMS DESIGNED BY CONTRACTOR'S ENGINEER SUCH AS, BUT NOT LIMITED TO, CLADDING, STAIRS, ELEVATORS, ESCALATORS, PRECAST STADIA, AND MEP LOADS ARE ASSUMED TO IMPOSE VERTICAL AND/OR HORIZONTAL LOADS ON THE BASE BUILDING STRUCTURAL MEMBERS WITHOUT GENERATING TORSION IN THE SUPPORTING STRUCTURAL MEMBERS. CONTRACTOR IS RESPONSIBLE FOR FURNISHING AND INSTALLING ALL SUPPLEMENTARY BRACING MEMBERS AS REQUIRED TO PREVENT TORSION ON THE BASE BUILDING STRUCTURE.

CD-12 FOR FIRE RATING AND FIREPROOFING ASSEMBLY EVALUATIONS, CONSIDER THE FOLLOWING ASSEMBLIES RESTRAINED: COMPOSITE WIDE-FLANGE STEEL FRAMING, INTERIOR BAYS OF CONTINUOUS CAST-IN-PLACE CONCRETE CONSTRUCTION. CONSIDER ALL OTHER ASSEMBLIES UNRESTRAINED.

SU SUBMITTALS

SU-1 TWENTY WORKING DAYS PRIOR TO SUBMITTING SHOP DRAWINGS, THE CONTRACTOR SHALL SUBMIT FOR STRUCTURAL ENGINEER' S REVIEW A SCHEDULE WHICH DETAILS THE ESTIMATED QUANTITY OF SHOP DRAWINGS AND THE DATE THE SHOP DRAWINGS WILL BE RECEIVED BY THE STRUCTURAL ENGINEER. THE STRUCTURAL ENGINEER SHALL HAVE THE OPPORTUNITY TO REVIEW THE PROPOSED SCHEDULE AND SUBMIT COMMENTS TO THE CONTRACTOR. THE FINAL SHOP DRAWING SCHEDULE SHALL BE DEVELOPED AND SUBMITTED TO THE STRUCTURAL ENGINEER. IN ACCORDANCE WITH THE SHOP DRAWING SCHEDULE, THE STRUCTURAL ENGINEER WILL RETURN THE SHOP DRAWING ITEMS WITHIN TEN WORKING DAYS AFTER HAVING RECEIVED THE REPRODUCIBLE SHOP DRAWING.

SU-2 THE CONTRACTOR IS TO REVIEW EACH SUBMITTAL PRIOR TO FORWARDING TO ARCHITECT AND STRUCTURAL ENGINEER. THE CONTRACTOR IS TO STAMP EACH SUBMITTAL VERIFYING THAT THE FOLLOWING IS ADDRESSED:
1. THE SHOP DRAWING IS REQUESTED.
2. THE SHOP DRAWING IS BASED ON THE LATEST DESIGN.
3. THE ARCHITECT' S AND STRUCTURAL ENGINEER' S COMMENTS FROM ANY PREVIOUS SUBMITTALS ARE ADDRESSED.
4. THE WORK IS COORDINATED AMONG ALL CONSTRUCTION TRADES.
5. REVISIONS FROM PREVIOUS SUBMITTALS ARE CLEARLY MARKED BY CIRCLING OR CLOUDS.
6. SUBMITTAL IS COMPLETE.
7. SUBMITTAL DOES NOT INCLUDE SUBSTITUTION REQUEST
8. SUBMITTAL SHALL INCLUDE A STAMP INDICATING PROJECT NAME AND LOCATION, SUBMITTAL NUMBER, SPECIFICATION SECTION NUMBER.

THE STRUCTURAL ENGINEER SHALL RETURN, WITHOUT COMMENT, SUBMITTALS WHICH THE CONTRACTOR HAS NOT STAMPED OR WHICH DO NOT MEET THE ABOVE REQUIREMENTS. THE STRUCTURAL ENGINEER' S REVIEW OF SUBMITTALS SHALL BE FOR GENERAL CONFORMANCE WITH THE DESIGN INTENT. NO WORK SHALL BE STARTED WITHOUT SUCH REVIEW.

SU-3 FOR COMPONENTS THAT REQUIRE ENGINEERING BY THE CONTRACTOR, PROVIDE A NOTE ON EACH SHOP DRAWING, WRITTEN AND SIGNED BY THE SUPPLIER' S ENGINEER, INDICATING THAT THE SHOP DRAWING IS IN CONFORMANCE WITH THE CALCULATIONS OF THE CONTRACTOR' S ENGINEER.

SU-4 THE FOLLOWING ITEMS REQUIRE SUBMITTALS FOR STRUCTURAL REVIEW AS OUTLINED IN THE SPECIFICATIONS:

03 10 00	S	CALC	CONCRETE FORMWORK
03 20 00	S		CONCRETE REINFORCING LAYOUT
03 30 00		CALC	CONCRETE MIX DESIGNS
03 30 00	S		CONCRETE CONSTRUCTION JOINT LAYOUT
04 22 00	S		MASONRY REINFORCEMENT LAYOUT
05 10 00	S		STRUCTURAL STEEL
06 18 00	S		GLU LAMINATED TIMBER

S = SHOP DRAWINGS AND/OR PRODUCT DATA REQUIRED
CALC = SUPPORTING CALCULATIONS REQUIRED, SIGNED AND SEALED BY A LICENSED PROFESSIONAL ENGINEER IN THE STATE IN WHICH THE PROJECT IS LOCATED.

SU-5 THE ITEMS IN THIS SECTION REQUIRE SHOP DRAWINGS, SUBMITTED FOR REVIEW OF INTERACTION WITH THE BASE BUILDING STRUCTURE.

THE FOLLOWING SHOP DRAWINGS SHALL SHOW THE MAGNITUDES, DIRECTIONS, LOCATIONS AND CONNECTION CONDITIONS OF ALL LOADS IMPOSED ON THE SUPPORTING STRUCTURE. SUBMIT ALL INFORMATION ON STRUCTURAL DRAWINGS:

ARCHITECTURAL ORNAMENTATION (FLAGPOLES, CANOPIES, BANNERS,MASTS, ETC.)
SKYLIGHTS

IN ADDITION TO THE SHOP DRAWING REQUIREMENTS ABOVE, THE FOLLOWING SUBMITTALS SHALL ALSO LIST THE DESIGN LOADS USED AND BE SIGNED AND SEALED BY A LICENSED PROFESSIONAL ENGINEER IN THE STATE IN WHICH THE PROJECT IS LOCATED:

EXTERIOR CLADDING SYSTEMS

FO FOUNDATIONS

FO-1 THE FOUNDATION DESIGN IS BASED ON THE GEOTECHNICAL INVESTIGATION REPORT BY GEODESIGN, INC., DATED OCTOBER 8, 2010 (PROJECT NO. SMONICA-10-01).

FO-2 FOUNDATIONS HAVE BEEN DESIGNED BASED ON THE FOLLOWING DESIGN VALUES FROM THE GEOTECHNICAL INVESTIGATION REPORT:
MEDIUM DENSE TO DENSE, NATIVE SOIL
NET ALLOWABLE BEARING CAPACITY: 3,500 PSF (1/3 INCREASE FOR SEISMIC OR WIND)

COEFFICIENT OF FRICTION: 0.4

SEE GEOTECHNICAL REPORT FOR ADDITIONAL REQUIREMENTS AND INFORMATION. DESIGN VALUES SHALL BE FIELD VERIFIED BY QUALIFIED GEOTECHNICAL CONSULTANT RETAINED BY THE OWNER.

FO-3 THE CONTRACTOR SHALL VERIFY FOUNDATION INSTALLATION AND CONSTRUCTION IS IN CONFORMANCE WITH THE RECOMMENDATIONS OUTLINED IN THE GEOTECHNICAL REPORT.

FO-4 CONTRACTOR SHALL BE RESPONSIBLE TO ADEQUATELY PROTECT ALL EXCAVATION. WHERE NECESSARY, SHEET AND SHORE THE EXCAVATION WITH ALL REQUIRED TIEBACKS AND BRACING AS DETERMINED BY CONTRACTOR'S STRUCTURAL ENGINEER.

FO-5 DO NOT BACKFILL AGAINST CANTILEVER RETAINING WALLS UNTIL THE CONCRETE HAS ATTAINED 1**00%** OF ITS DESIGN STRENGTH.

CM CONCRETE MATERIALS

CM-1 CONCRETE STRENGTHS AND WEIGHT SHALL MEET THE FOLLOWING 20-DAY COMPRESSIVE STRENGTHS (f'C) UON (SEE SPECIFICATION SECTION 03 30 00 FOR ADDITIONAL CONCRETE PROPERTIES):

FOOTINGS	3,000 PSI NWT
FOUNDATION WALLS	3,000 PSI NWT
NON-SHRINK GROUT	8,000 PSI
SLAB-ON-GRADE	3,000 PSI NWT
CONCRETE HOUSEKEEPING PADS	3,000 PSI

CM-2 PROVIDE NORMALWEIGHT CONCRETE WITH CURED DENSITY OF 145 +/- 5 PCF, AND AGGREGATE CONFORMING TO ASTM C33, UON. WHERE INDICATED, PROVIDE LIGHTWEIGHT CONCRETE WITH CURED DENSITY OF 112+/-3 PCF AND AGGREGATE CONFORMING TO ASTM C330.

CM-3 ALL CONCRETE SHALL BE THOROUGHLY CONSOLIDATED.

CM-4 THE USE OF CALCIUM CHLORIDE AND OTHER CHLORIDE CONTAINING AGENTS IS PROHIBITED. THE USE OF RECYCLED CONCRETE IS PROHIBITED. PLACEMENT WITHIN AND CONTACT BETWEEN ALUMINUM ITEMS, INCLUDING ALUMINUM CONDUIT, AND CONCRETE IS PROHIBITED.

CM-5 ALL CAST-IN-PLACE CONCRETE WILL EXPERIENCE DIFFERING VARIATIONS OF CRACKING. ANY ELEMENT EXPOSED TO DIRECT WEATHER AND/OR TEMPERATURE VARIATIONS DURING CONSTRUCTION OR IN THE FINAL CONDITION IS TO BE TREATED AND REGULARLY MAINTAINED TO PREVENT PROPAGATION OF CRACKS AND WATER PENETRATION. THE CONTRACTOR SHALL DEVELOP A REGULAR MAINTENANCE PROGRAM AND SUBMIT IT TO THE OWNER.

RE CONCRETE REINFORCEMENT

RE-1 ALL CONCRETE SHALL INCLUDE REINFORCEMENT. IF REINFORCEMENT IS NOT SPECIFICALLY INDICATED ON THE DRAWINGS, VERIFY WITH THE STRUCTURAL ENGINEER BEFORE PROCEEDING WITH WORK.

RE-2 REINFORCEMENT SHALL CONFORM TO THE FOLLOWING STANDARDS AND MATERIAL PROPERTIES:

DEFORMED BARS:	ASTM A615, GRADE 60, UON
WELDABLE DEFORMED BARS:	ASTM A706, GRADE 60, UON
EPOXY COATED DEFORMED BARS:	ASTM A615, GRADE 60, UON / A775
WELDED WIRE REINFORCEMENT	ASTM A185
EPOXY COATED WELDED WIRE REINFORCEMENT	ASTM A185 / A884
WELDED BAR ANCHORS:	NELSON D2L DEFORMED BAR ANCHORS (ICC-ES REPORT ER-5217)

RE-3 DETAIL REINFORCEMENT BASED ON THE PROJECT REQUIREMENTS, ACI-318 AND ACI-315, UON.

RE-4 WHERE A 90-DEG, 135 -DEG OR 180-DEG HOOK IS GRAPHICALLY INDICATED, PROVIDE CORRESPONDING ACI STANDARD HOOKS PER 1/S5.1, UON.

RE-5 DOWELS SHALL MATCH SIZE AND SPACING OF MAIN REINFORCEMENT, UON.

RE-6 REINFORCEMENT SHALL HAVE CONCRETE PROTECTION (CLEAR COVER) PER ACI 318 UNLESS OTHERWISE INDICATED ON THE DRAWINGS.

LOCATION	COVER
CONCRETE CAST AGAINST AND PERMANENTLY EXPOSED TO EARTH	3"
CONCRETE EXPOSED TO EARTH OR WEATHER:	
NO 5 BARS OR SMALLER...	1 1/2"
NO 6 BARS OR LARGER...	2"
CONCRETE NOT EXPOSED TO WEATHER OR IN CONTACT WITH GROUND	
SLABS, WALLS, JOISTS:	
NO 11 BARS OR SMALLER	3/4"
NO 14 AND LARGER	1 1/2"
BEAMS, COLUMNS:	
PRIMARY REINFORCEMENT, TIES, STIRRUPS, SPIRALS	1 1/2"
SHELLS, FOLDED PLATE MEMBERS:	
NO 5 BARS AND SMALLER	1/2"
NO 6 BARS AND LARGER	3/4"

RE-7 LAP REINFORCEMENT AS SPECIFICALLY DETAILED ON THE DRAWINGS. SEE REBAR OFFSET AND LAP SPLICE SCHEDULE, 1/S3.01

RE-8 UNLESS OTHERWISE NOTED ALL LAP SPLICES ARE TO BE CLASS "B" SPLICES PER REBAR OFFSET AND LAP SPLICE SCHEDULE, 1/S3.01

RE-9 PROVIDE MECHANICAL SPLICES FOR BARS LARGER THAN #11 OR WHERE INDICATED. PROVIDE TENSILE, PRE-QUALIFIED, WELDED OR THREADED MECHANICAL SPLICES UON.

RE-10 WELDING OF REINFORCING STEEL SHALL COMPLY WITH AWS D1.4

RE-11 LAP WELDED WIRE REINFORCEMENT TWO PANEL SPACINGS, UON

RE-12 PROVIDE LAP LOCATIONS AS FOLLOWS, UON:

A. GRADE BEAM / WALL (TOP HORIZONTAL REINFORCEMENT): AT CENTER OF SPAN
B. GRADE BEAM / WALL (BOTTOM HORIZONTAL REINFORCEMENT): AT SUPPORTS
C. WALL INSIDE FACE (VERTICAL REINFORCEMENT): AT SUPPORT
D. WALL OUTSIDE FACE (VERTICAL REINFORCEMENT): AT MIDHEIGHT OF WALL
E. UNLESS OTHERWISE NOTED TERMINATE BARS AT DISCONTINUOUS ENDS WITH STANDARD HOOKS.

RE-13 TERMINATION OF REINFORCEMENT, UON:

A. TERMINATE ALL BARS IN LAPS, 90 DEGREE BENDS, OR WITH DOWELS INTO EXISTING CONCRETE.
B. BEND TOP MAT OR FOOTING BARS DOWN TO BOTTOM BARS AT ENDS.
C. BEND BOTTOM MAT OR FOOTING BARS UP WITH STANDARD 90 DEGREE BENDS.
D. PROVIDE DOWELS FROM FOOTINGS AND SLABS INTO WALLS AND COLUMNS TO MATCH SIZE AND SPACING OF VERTICAL REINFORCEMENT.

RE-14 PROVIDE EPOXY COATED REINFORCEMENT AND ACCESSORIES IN AREAS OF DIRECT EXPOSURE TO THE ENVIRONMENT, CHEMICALS, OR DE-ICING FOR THE AREAS INDICATED ON THE DRAWINGS.

MA MASONRY

MA-1 LOAD BEARING AND BACKUP WALL CONCRETE MASONRY CONSTRUCTION SHALL CONFORM TO THE FOLLOWING MATERIAL STANDARDS:

CONCRETE BLOCK:	ASTM C9O, NORMALWEIGHT - TYPE I
MORTAR:	ASTM C270, TYPE S OR M PORTLAND CEMENT / LIME ONLY (USE TYPE M MORTAR WHEN MASONRY IS IN DIRECT CONTACT WITH SOIL; TYPE S IN ALL OTHER CONDITIONS)
GROUT:	ASTM C476 (MINIMUM 28 DAY COMPRESSIVE STRENGTH OF 2500 PSI)
REINFORCEMENT:	ASTM A615, GRADE 60
JOINT REINFORCEMENT:	ASTM A82, TRUSS OR LADDER TYPE
EXTERIOR JT REINF:	GALVANIZE PER ASTM A153
INTERIOR JT REINF:	GALVANIZE PER ASTM A641

MA-2 THE MINIMUM COMPRESSIVE STRENGTH OF THE MASONRY (F' M) SHALL BE 1,800 PSI, UON, AS DETERMINED IN ACCORDANCE WITH THE ABOVE REFERENCED SPECIFICATIONS FOR MASONRY STRUCTURES.

MA-3 PLACE MASONRY UNITS WITH FULL FACESHELL MORTAR COVERAGE ON HORIZONTAL AND VERTICAL FACE SHELLS. WEBS SHALL ALSO HAVE FULL MORTAR COVERAGE AROUND ALL GROUTED CELLS.

MA-4 LAY MASONRY UNITS IN RUNNING BOND UON.

MA-5 ALL MASONRY SHALL INCLUDE REINFORCEMENT. IF REINFORCEMENT IS NOT SPECIFICALLY INDICATED ON THE DRAWINGS, VERIFY WITH THE STRUCTURAL ENGINEER.

MA-6 CALCIUM CHLORIDE SHALL NOT BE USED IN MORTAR OR GROUT.

MA-7 ALL CELLS SHALL BE FULLY GROUTED.

CJ CONCRETE CONSTRUCTION JOINTS

CJ-1 PROVIDE CONSTRUCTION JOINTS IN ACCORDANCE WITH ACI-318. SUBMIT SHOP DRAWINGS SHOWING PROPOSED CONSTRUCTION JOINT LOCATIONS, DETAILS AND THE PLACEMENT SEQUENCE FOR THE STRUCTURAL ENGINEER'S APPROVAL PRIOR TO PROCEEDING WITH WORK.

CJ-2 NO HORIZONTAL CONSTRUCTION JOINTS WILL BE PERMITTED IN BEAMS, UPTURNED BEAMS, WALLS AND SLABS UNLESS SPECIFICALLY SHOWN ON THE DRAWINGS OR APPROVED IN WRITING BY THE DESIGN PROFESSIONALS PRIOR TO CONSTRUCTION.

CJ-3 PLACE VERTICAL CONSTRUCTION JOINTS TO PROVIDE A 60 FT MAXIMUM LENGTH OF CONCRETE PLACEMENT AND LOCATE AS FOLLOWS:
A. FOUNDATION WALLS: MINIMUM OF 8 FT FROM ANY COLUMN LINE OR WALL OPENING
B. GRADE BEAMS SUPPORTING FOUNDATION WALLS: AT CENTERLINES BETWEEN SUPPORTS

CJ-4 PROVIDE CONTINUOUS WATERSTOPS AT ALL CONSTRUCTION JOINTS EXPOSED TO SOIL OR WATER, AS DESCRIBED IN THE SPECIFICATIONS.

SS STRUCTURAL STEEL

SS-1 STEEL MATERIALS SHALL CONFORM TO THE FOLLOWING MINIMUM REQUIREMENTS UNLESS OTHERWISE NOTED ON THE CONTRACT DOCUMENTS:

ROLLED SHAPES AND CHANNELS:	ASTM A572 OR A992, MIN YIELD STRENGTH 50 KSI
ANGLES FOR TRUSSES AND BRACES:	ASTM A36 MIN YIELD STRENGTH 36 KSI
MISCELLANEOUS ANGLES:	ASTM A36
HOLLOW STRUCTURAL SECTIONS:	ASTM A500 GRADE B, MIN YIELD STRENGTH 42 KSI FOR ROUND AND 46 KSI FOR RECTANGULAR HSS
SEAMLESS PIPE:	ASTM A53 GRADE B, TYPE S, MIN YIELD STRENGTH 35 KSI.
PLATES:	ASTM A572, GRADE 50
RODS:	GRADE 65 CARBON STEEL

SS-2 CONNECTION MATERIAL SHALL CONFORM TO THE FOLLOWING MINIMUM REQUIREMENTS OR AS NEEDED FOR CONNECTION DESIGN:

ANGLES:	ASTM A36
WTs:	ASTM A992
PLATES:	ASTM A36, MINIMUM YIELD STRENGTH 36 KSI
BOLTS:	ASTM A325 OR A490
NUTS:	ASTM A563
WASHERS:	ASTM F436
ANCHOR RODS:	ASTM F1554 GRADE 55 WITH WELDABILITY SUPPLEMENT S1
HEADED STUDS:	ASTM A 108, GRADE 1010 THROUGH 1020 HEADED STUD TYPE, COLD-FINISHED CARBON STEEL, AWS D1.1, TYPE B. 3/4" DIAMETER
WELD ELECTRODES:	E70XX
CLEVISES:	ASTM A668

SS-3 STRUCTURAL STEEL MEMBERS AND CONNECTIONS DENOTED "SLRS" SHALL SATISFY REQUIREMENTS FOR THE SEISMIC LOAD RESISTING SYSTEM IN SPECIFICATION SECTION 05 12 00.

SS-4 WHERE NO CAMBER IS INDICATED, FABRICATE BEAMS SO THAT ANY NATURAL CAMBER IS UPWARD AFTER ERECTION.

SS-5 SPLICES SHALL BE ALLOWED ONLY AT LOCATIONS SPECIFICALLY INDICATED ON THE STRUCTURAL DRAWINGS UNLESS APPROVED OTHERWISE BY THE SER IN WRITING.

SS-6 FOR STEEL MEMBERS AND EMBEDMENTS EXPOSED TO WEATHER, PROVIDE HOT-DIPPED GALVANIZED FINISH.

SS-7 PROVIDE HOLES IN ALL STEEL AS REQUIRED TO PREVENT ANY ACCUMULATION OF WATER. ALL PENETRATIONS THROUGH MAIN MEMBERS SHALL NOT EXCEED 1 1/8" DIA AND SHALL BE GROUND SMOOTH. THESE DRAINS MUST BE KEPT CLEAN AND OPEN

SS-8 SHOW ALL COPES, HOLES, OPENINGS AND MODIFICATIONS REQUIRED IN STRUCTURAL STEEL MEMBERS FOR ERECTION OR THE WORK OF OTHER TRADES ON THE SHOP DRAWINGS FOR APPROVAL BY THE ARCHITECT AND STRUCTURAL ENGINEER.

SS-9 FIELD MODIFICATION OF STRUCTURAL STEEL IS PROHIBITED WITHOUT PRIOR APPROVAL OF THE ARCHITECT AND STRUCTURAL ENGINEER.

SS-10 THE CONTRACTOR SHALL SUBMIT A STEEL ERECTION PROCEDURE, PREPARED UNDER THE SUPERVISION OF A STRUCTURAL ENGINEER LICENSED IN THE STATE OF THE LOCATION OF THE PROJECT (THE CONTRACTOR'S ENGINEER) FOR REVIEW BY THE STRUCTURAL ENGINEER OF RECORD. THIS PROCEDURE MUST INCLUDE THE PROPOSED SURVEY REQUIRED BY THE STEEL SPECIFICATIONS.

SS-11 STEEL USING COMPLETE JOINT PENETRATION GROOVE WELDS THAT FUSE THROUGH THE THICKNESS OF THE FLANGE OR WEB SHALL HAVE A MINIMUM CHARPY V-NOTCH IMPACT TESTING VALUE AS FOLLOWS:

A. ASTM A6/A6M HOT-ROLLED SHAPES WITH A FLANGE THICKNESS EXCEEDING **[2]** INCHES AND BUILT-UP HEAVY SHAPES WITH PLATES EXCEEDING **[2]** INCHES IN THICKNESS: 20 FT-LB @ 70 DEG. F
B. REGARDLESS OF THICKNESS, ALL TRUSSES, LATERAL SYSTEM MEMBERS (INCLUDING COLUMNS, WIND GIRDERS, BRACES, ETC.): 20 FT-LB @ 70 DEG. F
C. STEEL EXPOSED TO TEMPERATURES IN SERVICE BELOW 50 DEG. F: 25 FT-LB @ [40] DEG. F.
D. WELD METAL: 20 FT-LB @ MINUS 20 DEG. F AND 40 FT-LB @ 70 DEG.
E. F
WELD METAL EXPOSED TO TEMPERATURES IN SERVICE BELOW 50
F. DEG. F: 25 FT-LB @ MINUS 40 DEG. F
TESTING IS TO BE IN ACCORDANCE WITH ASTM A6/A6M, SUPPLEMENTARY REQUIREMENT S30, CHARPY V-NOTCH IMPACT TEST FOR STRUCTURAL SHAPES – ALTERNATE CORE LOCATION, AT ROLLED SHAPES AND ASTM A673 FOR PLATES, AT ANY PERMITTED LOCATIONS.

SC STRUCTURAL STEEL CONNECTIONS

SC-1 DO NOT USE OVERSIZED OR SLOTTED HOLES FOR ANY CONNECTIONS UNLESS SPECIFICALLY INDICATED ON THE DRAWINGS OR APPROVED IN WRITING BY THE SER

SC-2 ALL WELDING SHALL CONFORM TO THE REQUIREMENTS OF THE STRUCTURAL WELDING CODE, ANSI/AWS D1.1, LATEST EDITION. ALL WELD SIZES SHALL BE THE LARGER OF THE SIZE REQUIRED BY CONNECTION FORCES, THE MINIMUM SIZE PER ANSI/AWS D1.1, OR 3/16 INCH MINIMUM FILLET WELD UON. ANY WELD SIZES SHOWN ON THE DESIGN DRAWINGS ARE CONSIDERED EFFECTIVE WELD SIZES AND SHALL BE INCREASED IN ACCORDANCE WITH AWS AS REQUIRED BY GAPS OR SKEWS BETWEEN COMPONENTS.

SC-3 USE RUNOFF TABS AT ALL BEVEL AND FULL PENETRATION WELDS. REMOVE RUNOFF TABS BY NEAT CUTS AFTER WELD IS COMPLETED. GRIND SMOOTH WHERE REQUIRED BY DETAIL.

SC-4 WELDING EXPOSED TO LOW (OUTDOOR) TEMPERATURES IN SERVICE SHALL CONFORM TO AWS D1.5

SC-5 REMOVE WELD BACK UP BARS AND GRIND SMOOTH AFTER WELD IS COMPLETED, UON

PICO BRANCH LIBRARY
Virginia Avenue Park
Santa Monica, CA 90404

PROJECT

KoningEizenberg Architecture
1454 25th St, Santa Monica, CA 90404
310.828.6131 info@kearch.com
310.828.0719 fax www.kearch.com

ARCHITECT'S PROJECT NO.
1001

ARCHITECT

All designs, ideas, arrangements and plans indicated by these drawings are the property and copyright of the Architect and shall neither be used on any other work nor be disclosed to any other person for any use whatsoever without written permission.

Koning Eizenberg Architecture and/or its principals and employees waives any and all liability or responsibility for problems that may occur when these plans, drawings, specifications, and/or designs are followed without the professional's guidance with ambiguities, or conflicts which are alleged.

Thornton Tomasetti
Thornton Tomasetti, Inc.
6080 Center Drive, Suite 260
Los Angeles CA 90045-9204
T 310.665.0010 **F** 310.665.0101

CONSULTANT

City of Santa Monica
Architecture Services
1437 4TH STREET, SUITE 300
SANTA MONICA, CA 90401
TEL. (310) 458-2205
FAX. (310) 399-1541
architecture@smgov.net

DATE : ________ 20 __
SUBMITTED BY :

DATE : ________ 20 __
APPROVED BY :
Miriam Mulder,
Architecture Services Manager

CITY OF SANTA MONICA
DEPARTMENT OF PUBLIC WORKS

REVIEWED BY : DATE : ________ 20 __

REVIEWED BY : DATE : ________ 20 __

REVIEWED BY : DATE : ________ 20 __

CITY CLIENT

NO.	DATE	BY	DESCRIPTION

REVISIONS

ISSUE
65% CONSTRUCTION DOCUMENTS / BID SET

DATE
01/23/2012

DRAWING NO. **6693**

SHEET OF SHEETS

SHEET TITLE
GENERAL NOTES

SHEET NO.
S0.01

File Path: C:\Scratch\TT-S10502-PICO BRANCH LIBRARY-CENTRAL_tweir.rvt
ON: 1/23/2012 12:12:08 PM

PA POST-INSTALLED ANCHORS

PA-1 POST-INSTALLED ANCHORS INCLUDE EXPANSION ANCHORS, SCREW ANCHORS, EPOXY ANCHORS/DOWELS, AND POWDER-ACTUATED FASTENERS.

PA-2 INSTALL POST-INSTALLED ANCHORS IN ACCORDANCE WITH THE CONTRACT DOCUMENTS, APPLICABLE ICC-ES REPORT AND THE MANUFACTURER'S RECOMMENDATIONS.

PA-3 USE SCANNING EQUIPMENT OR OTHER MEANS TO LOCATE AND AVOID CUTTING OR DAMAGING REINFORCING BARS. SER APPROVAL IS REQUIRED PRIOR TO CUTTING OR DAMAGING REINFORCING.

PA-4 SPECIAL INSPECTION IS REQUIRED FOR ALL POST-INSTALLED ANCHOR INSTALLATIONS, UON.

PA-5 FIELD TESTING OF POST-INSTALLED ANCHORS IS REQUIRED, UON. TESTINSTALLED ANCHORS IN ACCORDANCE WITH THE FOLLOWING:

A. TEST 100% OF ANCHORS AT ALL STRUCTURAL APPLICATIONS, UON.
B. TEST 50% OF ANCHORS AT ALL NON-STRUCTURAL APPLICATIONS (SUCH AS EQUIPMENT ANCHORAGE), UON.
C. TEST 10% OF ANCHORS AT SILL PLATE BOLTING APPLICATIONS, UON.
D. IF ANY ANCHOR FAILS TESTING, TEST ALL ANCHORS OF THE SAME TYPE NOT PREVIOUSLY TESTED UNTIL 20 CONSECUTIVE ANCHORS PASS.
E. FIELD TESTS SHALL BE EITHER TENSION TESTS OR TORQUE TESTS, AS REQUIRED FOR THE SPECIFIC ANCHOR TYPE.
F. TENSION TESTS: APPLY TEST LOADS TO ANCHORS WITHOUT REMOVING THE NUT IF POSSIBLE. IF NOT, REMOVE NUT AND INSTALL A THREADED COUPLER TO THE SAME TIGHTNESS AS THE ORIGINAL NUT USING A TORQUE WRENCH. REACTION LOADS FROM TEST FIXTURES MAY BEAPPLIED CLOSE TO THE ANCHOR BEING TESTED, PROVIDED THE ANCHOR IS NOT RESTRAINED FROM WITHDRAWING BY THE FIXTURES. TO BE ACCEPTABLE, ANCHORS SHALL HAVE NO OBSERVABLE MOVEMENT AT THE APPLICABLE TEST LOAD (OBSERVABLE MOVEMENT IS DEFINED AS THE WASHER UNDER THE NUT BECOMING LOOSE).
G. TORQUE TESTS: TO BE ACCEPTABLE, THE APPLICABLE TEST TORQUE MUST BE REACHED WITHIN ONE-HALF TURN OF THE NUT.
H. TEST EQUIPMENT IS TO BE CALIBRATED BY AN APPROVED TESTING LABORATORY IN ACCORDANCE WITH STANDARD RECOGNIZED PROCEDURES.
I. FIELD TESTING SHALL BE DONE IN THE PRESENCE OF THE PROJECT INSPECTOR.

PA-6 EXPANSION ANCHORS

A. EXPANSION ANCHORS SHALL BE ONE OF THE FOLLOWING, UON:

CARBON STEEL HILTI KWIK BOLT TZ
(ICC-ES REPORT ESR-1917)

SIMPSON STRONG-BOLT
(ICC-ES REPORT ESR-1771)

B. ANCHOR EMBEDMENT AND FIELD TEST VALUES ARE AS FOLLOWS, UON:

HILTI KWIK BOLT TZ IN NORMAL-WEIGHT CONCRETE			
ANCHOR DIAMETER	Hef	MINIMUM HOLE DEPTH	TORQUE TEST VALUE (FT-LBS)
3/8"	2"	2-5/8"	25
1/2"	2"	2-5/8"	40
5/8"	4"	4-3/4"	60
3/4"	4-3/4"	5-3/4"	110

HILTI KWIK BOLT TZ IN LIGHTWEIGHT CONCRETE			
ANCHOR DIAMETER	Hef	MINIMUM HOLE DEPTH	TORQUE TEST VALUE (FT-LBS)
3/8"	2"	2-5/8"	25
1/2"	2"	2-5/8"	40
5/8"	3-1/8"	3-7/8"	60

SIMPSON STRONG-BOLT IN NORMAL-WEIGHT CONCRETE			
ANCHOR DIAMETER	Hef	MINIMUM HOLE DEPTH	TORQUE TEST VALUE (FT-LBS)
1/2"	2-1/4"	2-3/4"	50
5/8"	4-1/2"	5-1/8"	85
3/4"	5"	5-3/4"	180
1"	9"	9-3/4"	230

SIMPSON STRONG-BOLT IN LIGHTWEIGHT CONCRETE			
ANCHOR DIAMETER	Hef	MINIMUM HOLE DEPTH	TORQUE TEST VALUE (FT-LBS)
1/2"	2-1/4"	2-3/4"	40
5/8"	2-3/4"	3-3/8"	40

C. Hef IS MEASURED FROM FACE OF CONCRETE SUBSTRATE TO THE TEETH ON THE EXPANSION ELEMENT.

D. CONTRACTOR SHALL PROVIDE ANCHORS WITH SUFFICIENT TOTAL LENGTH FOR THE SPECIFIED EMBEDMENT LENGTH, THICKNESS OF FASTENED PART, WASHER AND NUT.

PA-7 SCREW ANCHORS

A. SCREW ANCHORS SHALL BE SIMPSON TITEN HD (ICC-ES REPORT ESR-2713), UON.
B. ANCHOR EMBEDMENT SHALL BE AS SPECIFICALLY DETAILED ELSEWHERE IN THE DRAWINGS.
C. FIELD TEST VALUES ARE AS FOLLOWS, UON:

SCREW ANCHORS	
ANCHOR DIAMETER (IN)	TORQUE TEST VALUE (FT-LBS)
3/8	10
1/2	10
3/4	20

PA-8 EPOXY ANCHORS AND DOWELS

A. EPOXY SHALL BE ONE OF THE FOLLOWING, UON:

HILTI HY-150 MAX-SD (ICC-ES REPORT ESR-3013)

HILTI HIT-RE 500-SD (ICC-ES REPORT ESR-2322)

SIMPSON SET-XP (ICC-ES REPORT ESR-2508)

B. RODS EMBEDDED IN EPOXY SHALL BE CARBON STEEL THREADED RODS PER THE EPOXY MANUFACTURER'S ICC-ES REPORT.
C. REINFORCING STEEL BARS EMBEDDED IN EPOXY SHALL BE ASTM A615, GRADE 60, UON.
D. ANCHOR EMBEDMENT AND FIELD TEST VALUES ARE AS FOLLOWS, UON:

EPOXY ANCHORS IN NORMAL-WEIGHT CONCRETE (3000 PSI MIN)				
REBAR SIZE	EMBEDMENT (IN)	TENSION TEST VALUE (LBS)		
		HILTI HY-150 MAX-SD	HILTI HIT-RE 500-SD	SIMPSON SET-XP
#3	3	1420	2050	*
#4	4	2760	3640	5790
#5	5	4640	5750	6250
#6	6	7180	8150	11070
#7	7	9860	10140	8450
#8	8	12970	12380	17050
#9	9	*	14700	*
#10	10	*	16780	*
* LISTED EPOXY ADHESIVE MAY NOT BE USED WITH NOTED REBAR SIZES				

EPOXY ANCHORS IN NORMAL-WEIGHT CONCRETE (3000 PSI MIN)				
THREADED ROD DIAMETER (IN)	EMBEDMENT (IN)	TENSION TEST VALUE (LBS)		
		HILTI HY-150 MAX-SD	HILTI HIT-RE 500-SD	SIMPSON SET-XP
3/8	3	1420	2030	*
1/2	4	2760	3060	4090
5/8	5	4640	5770	6250
3/4	6	7180	8150	9650
7/8	7	9860	10200	8450
1	8	12970	12310	17050
1-1/4	10	*	16520	*
* LISTED EPOXY ADHESIVE MAY NOT BE USED WITH NOTED ROD SIZES				

E. TESTING OF EPOXY DOWELS AT JOINTS BETWEEN NEW AND EXISTING SLABS-ON-GRADE IS NOT REQUIRED.
F. TESTING OF #3 EPOXY DOWELS AT CURBS AND HOUSEKEEPING PADS IS NOT REQUIRED.
G. TESTING SHALL OCCUR AFTER EPOXY HAS CURED, AS PER MANUFACTURER'S RECOMMENDATIONS.

PA-9 POWDER-ACTUATED FASTENERS (PAF):

A. POWDER-ACTUATED FASTENERS SHALL BE ONE OF THE FOLLOWING, UON:

HILTI X-U (ICC-ES REPORT ESR-2269)

SIMPSON POWER-DRIVEN FASTENERS (ICC-ES REPORT ESR-2138)

B. PROVIDE 0.08" THICK x 1.1" SQUARE OR 1.425" ROUND WASHERS FOR ALL POWDER-ACTUATED FASTENERS.
C. FASTENER DIAMETER AND EMBEDMENT SHALL BE AS SPECIFICALLY DETAILED ELSEWHERE IN THE DRAWINGS.
D. TESTING OF POWDER-ACTUATED FASTENERS IS NOT REQUIRED.

PICO BRANCH LIBRARY

Virginia Avenue Park
Santa Monica, CA 90404

PROJECT

KoningEizenberg Architecture
1454 25th St, Santa Monica, CA 90404
310.828.6131 info@kearch.com
310.828.0719 fax www.kearch.com

ARCHITECT'S PROJECT NO.
1001

ARCHITECT

All designs, ideas, arrangements and plans indicated by these drawings are the property and copyright of the Architect and shall neither be used on any other work nor be disclosed to any other person for any use whatsoever without written permission.

Koning Eizenberg Architecture and/or its principals and employees waives any and all liability or responsibility for problems that may occur when these plans, drawings, specifications, and/or designs are followed without the professional's guidance with ambiguities, or conflicts which are alleged.

Thornton Tomasetti
Thornton Tomasetti, Inc.
6080 Center Drive, Suite 260
Los Angeles CA 90045-9204
T 310.665.0010 F 310.665.0101

CONSULTANT

City of Santa Monica Architecture Services
1437 4TH STREET, SUITE 300
SANTA MONICA, CA 90401
TEL. (310) 458-2205
FAX. (310) 399-1541
architecture@smgov.net

DATE : _____ 20 __
SUBMITTED BY :

DATE : _____ 20 __
APPROVED BY :
Miriam Mulder,
Architecture Services Manager

CITY OF SANTA MONICA
DEPARTMENT OF PUBLIC WORKS

REVIEWED BY : DATE : _____ 20 __

REVIEWED BY : DATE : _____ 20 __

REVIEWED BY : DATE : _____ 20 __

CITY CLIENT

NO.	DATE	BY	DESCRIPTION

REVISIONS

ISSUE
65% CONSTRUCTION DOCUMENTS / BID SET

DATE
01/23/2012

DRAWING NO. **6693**

SHEET OF SHEETS

SHEET TITLE
GENERAL NOTES

SHEET NO.
S0.02

File Path: C:\Scratch\TT-S10502-PICO BRANCH LIBRARY-CENTRAL_3wer.rvt
On: 1/23/2012 12:12:09 PM

WD WOOD

WD-1 ALL FRAMING LUMBER SHALL BE DOUGLAS FIR, UON. GRADE SHALL BE AS FOLLOWS:

JOIST AND RAFTERS: NO. 1
POST, BEAMS, HEADERS: NO. 1
STUDS, PLATES, BLOCKS
LIGHT FRAMING AND MISC: NO. 2

WD-2 ALL LUMBER IN CONTACT WITH CONCRETE OR MASONRY 6'-0" OR LESS ABOVE GROUND SHALL BE PRESSURE TREATED.

WD-3 LUMBER MOISTURE CONTENT: SEE SPECIFICATIONS

WD-4 REJECTION OF WOOD MEMBERS: THE PROVISION IN DOC PS 20 (AS REFERENCED BY CBC 2303.1.1) WHICH PERMITS 5 PERCENT OF THE MATERIAL TO FALL BELOW GRADE SHALL NOT BE CONSTRUED TO PERMIT BELOW-GRADE MATERIAL TO BE USED AS LOAD-CARRYING MEMBERS WHICH HAVE BEEN DESIGNED FOR SPECIFIED ALLOWABLE STRESSES AND ACCEPTABLE SAFETY FACTORS. MATERIALS WHICH FALL BELOW GRADE SHALL BE REJECTED FOR LOAD-CARRYING USE. WOOD MEMBERS WHICH ARE REQUIRED TO CARRY DESIGN LOADS AND WHICH THE PROJECT ARCHITECT, ENGINEER OR INSPECTOR JUDGE TO BE MISGRADED SHALL BE REINSPECTED BY A QUALIFIED LUMBER GRADING INSPECTOR TO VERIFY THE PROPER GRADING OF THE MATERIAL. WOOD MEMBERS WHICH HAVE PERMISSIBLE GRADE CHARACTERISTICS OR DEFECTS IN SUCH COMBINATION AS TO AFFECT THE SERVICEABILITY OF THE MEMBER SHALL BE REJECTED BY THE PROJECT INSPECTOR WITH THE CONCURRENCE OF THE ARCHITECT OR STRUCTURAL ENGINEER.

WD-5 STRUCTURAL SHEATHING:

A. ROOF SHEATHING: 15/32" APA RATED SHEATHING 32/16", EXPOSURE 1, PS1-07, 5 PLY PLYWOOD
B. NOT USED
C. WALL SHEATHING: 15/32" APA RATED SHEATHING, EXPOSURE 1, PS1-07, 5 PLY PLYWOOD.

WD-6 NOT USED.

WD-7 NOT USED.

WD-8 NOT USED.

WD-9 NOT USED.

WD-10 NOT USED.

WD-11 GLUED-LAMINATED BEAMS:

A. 24FV4 FOR SIMPLE SPANS AND 24FV8 FOR CANTILEVERED AND CONTINUOUS BEAMS.
B. APPEARANCE: INDUSTRIAL GRADE TYP.; ARCHITECTURAL GRADE IF EXPOSED.
C. CAMBER TO RADIUS OF 1600' U.O.N.
D. GLULAM BEAMS SHALL BE CONTINUOUSLY INSPECTED PER 1704A6.2.1 BY A GLUE FABRICATION INSPECTOR APPROVED BY DSA. ALL GLULAM BEAMS SHALL BE STAMPED WITH AN IDENTIFICATION MARK.

WD-12 NOT USED.

WD-13 FRAMING HARDWARE: AS MANUFACTURED BY SIMPSON CO. OR APPROVED EQUAL. SIMPSON DESIGNATIONS USED.

WD-14 NAILS: COMMON WIRE GAGE UON. NAILING TO CONFORM TO CBC TABLE 2304.9.1, UON.

WD-15 BOLTS: ASTM A307. ANCHOR RODS = ASTM F1554, FY = 36 KSI.

WD-16 PROVIDE LATERAL SUPPORT FOR BEAMS, JOISTS AND RAFTERS PER CBC 2308.8.5.

WD-17 NOT USED.

WD-18 NAILS, BOLTS AND SCREWS FOR PRESSURE PRESERVATIVE TREATED AND FIRE RETARDANT TREATED WOOD SHALL BE HOT-DIPPED ZINC COATED GALVANIZED.

SI SPECIAL INSPECTIONS

SI-1 ALL TESTS AND INSPECTIONS SHALL BE PERFORMED BY A SPECIAL INSPECTOR PER CBC SECTIONS 1704, 1707, AND 1708. THE SPECIAL INSPECTOR SHALL BE EMPLOYED BY THE OWNER, BUT NOT BY THE CONTRACTOR OR ANY OTHER PERSON RESPONSIBLE FOR THE WORK.

SI-2 THE SPECIAL INSPECTOR SHALL BE A QUALIFIED (LICENSED) PERSON WHO SHALL DEMONSTRATE COMPETENCE TO THE SATISFACTION OF THE BUILDING OFFICIAL, FOR INSPECTION OF THE PARTICULARTYPE OF CONSTRUCTION OR OPERATION REQUIRING SPECIAL INSPECTION.

SI-3 CONTRACTORS RESPONSIBLE FOR THE CONSTRUCTION OF A WIND OR SEISMIC FORCE RESISTING SYSTEM/COMPONENT LISTED IN THE "STATEMENT OF SPECIAL INSPECTION" SHALL SUBMIT A WRITTEN STATEMENT OF RESPONSIBILITY TO THE BUILDING INSPECTOR AND THE OWNER PRIOR TO THE COMMENCEMENT OF WORK ON SUCH SYSTEM OR COMPONENT PER CBC SECTION 1706.1.

SI-4 PER THE 2010 CBC, THE FOLLOWING ITEMS SHALL BE TESTED AND INSPECTED BY A DEPUTY INSPECTOR:

LEVEL 1 SPECIAL INSPECTION

INSPECTION TASK	FREQUENCY OF INSPECTION: CONTINUOUS DURING TASK LISTED	FREQUENCY OF INSPECTION: PERIODICALLY DURING TASK LISTED	REFERENCE FOR CRITERIA: IBC SECTION	REFERENCE FOR CRITERIA: ACI 530/ASCE 5/TMS 402[a]	REFERENCE FOR CRITERIA: ACI 530/ASCE 6/TMS 602[a]
1. AS MASONRY CONSTRUCTION BEGINS, THE FOLLOWING SHALL BE VERIFIED TO ENSURE COMPLIANCE:					
a. PROPORTIONS OF SITE PREPARED MORTAR.	—	X	—	—	ART. 2.6A
b. CONSTRUCTION OF MORTAR JOINTS.	—	X	—	—	ART. 3.3B
c. LOCATION OF REINFORCEMENT, CONNECTORS, PRESTRESSING TENDONS AND ANCHORAGES.	—	X	—	—	ART. 3.4, 3.6A
d. PRESTRESSING TECHNIQUE	—	X	—	—	ART. 3.6B
e. GRADE AND SIZE OF PRESTRESSING TENDONS AND ANCHORAGES	—	X	—	—	ART. 2.4B, 2.4H
2. THE INSPECTION PROGRAM SHALL VERIFY:					
a. SIZE AND LOCATION OF STRUCTURAL ELEMENTS.	—	X	—	—	ART. 3.3G
b. TYPE, SIZE AND LOCATION OF ANCHORS, INCLUDING OTHER DETAILS OF ANCHORAGE OF MASONRY TO STRUCTURAL MEMBERS FRAMES FRAMES OR OTHER CONSTRUCTION.	—	X	—	SEC. 1.2.2(e), 2.1.4, 3.1.6	ART. 3.3G
c. SPECIFIED SIZE, GRADE AND TYPE OF REINFORCEMENT	—	X	—	SEC. 1.13	ART. 3.3G
d. WELDING OF REINFORCEMENT BARS.	X	—	—	SEC. 2.1.10.7.2, 3.3.3.4(b)	—
e. PROTECTION OF MASONRY DURING COLD WEATHER (TEMPERATURE BELOW 40°F) OR HOT WEATHER (TEMPERATURE ABOVE 90°F)	—	X	SEC. 2104.3, 2104.4	—	ART 1.8C, 1.8D
f. APPLICATION AND MEASUREMENT OF PRESTRESSING FORCE.	—	X	—	—	ART 3.6B
3. PRIOR TO GROUTING, THE FOLLOWING SHALL BE VERIFIED TO ENSURE COMPLIANCE:					
a. GROUT SPACE IS CLEAN	—	X	—	—	ART. 3.2D
b. PLACEMENT OF REINFORCEMENT AND CONNECTORS AND PRESTRESSING TENDONS AND ANCHORAGES.	—	X	—	SEC. 1.13	ART. 3.4
c. PROPORTIONS OF SITE-PREPARED GROUT AND PRESTRESSING GROUT FOR BONDED TENDONS.	—	X	—	—	ART. 2.6B
d. CONSTRUCTION OF MORTAR JOINTS	—	X	—	—	ART. 3.3B
4. GROUT PLACEMENT SHALL BE VERIFIED TO ENSURE COMPLIANCE WITH CODE AND CONSTRUCTION DOCUMENT PROVISIONS:	X	—	—	—	ART. 3.5
a. GROUTING OF PRESTRESSING BONDED TENDONS.	X	—	—	—	ART. 3.6C
5. PREPARATION OF ANY REQUIRED GROUT SPECIMENS, MORTAR SPECIMENS AND/OR PRISIMS SHALL BE OBSERVED	X	—	SEC. 2105.2.2, 2105.3	—	ART.1.4
6. COMPLIANCE WITH REQUIRED INSPECTION PROVISIONS OF THE CONSTRUCTION DOCUMENTS AND THE APPROVED SUBMITTALS SHALL BE VERIFIED	—	X	—	—	ART. 1.5

TABLE 1704.7
RERQUIRED VERIFICATION AND INSPECTION OF SOILS

VERIFICATION AND INSPECTION TASK	CONTINUOUS DURING TASK LISTED	PERIODICALLY DURING TASK LISTED
1. VERIFY MATERIALS BELOW SHALLOW FOUNDATIONS ARE ADEQUATE TO ACHIEVE THE DESIGN BEARING CAPACITY.	—	X
2. VERIFY EXCAVATIONS ARE EXTENDED TO PROPER DEPTH AND HAVE REACHED PROPER MATERIAL	—	X
3. PERFORM CLASSIFICATION AND TESTING OF CONTROLLED FILL MATERIALS	—	X
4. VERIFY USE OF PROPER MATERIALS, DENSITIES AND LIFT THICKNESSES DURING PLACEMENT AND COMPACTION OF COMPACTED FILL.	X	—
5. PRIOR TO PLACEMENT OF COMPACTED FILL, OBSERVE SUBGRADE AND VERIFY THAT SITE HAS BEEN PREPARED PROPERLY	—	X

TABLE 1704.3
REQUIRED VERIFICATION AND INSPECTION OF STEEL CONSTRUCTION

VERIFICATION AND INSPECTION	CONTINUOUS	PERIODIC	REFERENCED STANDARD	IBC REFERENCE
1. MATERIAL VERIFICATION OF HIGH-STRENGTH BOLTS, NUTS AND WASHERS:				
a. IDENTIFICATION MARKING TO CONFORM TO ASTM STANDARDS SPECIFIED IN THE APPROVED CONSTRUCITON DOCUMENTS	—	X	AISC 360, SECTION A3.3 AND APPLICABLE ASTM MATERIAL STANDARDS	
b. MANUFACTURER'S CERTIFICATE OF COMPLIANCE REQUIRED.	—	X	—	—
2. INSPECTION OF HIGH-STRENGTH BOLTING:				
a. SNUG-TIGHT JOINTS	—	X	AISC 360, SECTION M2.5	1704.3.3
b. PRETENSIONED AND SLIP-CRITICAL JOINTS USING TURN-OF-NUT WITH MATCHMARKINGM TWIST-OFF BOLT OR DIRECT TENSION INDICATOR METHODS OF INSTALLATION	—	X		
C. PRETENSIONED AND SLIP-CRITICAL JOINTS USING TURN-OF-NUT WITHOUT MATCHMARKING OR CALIBRATED WRENCH METHORDS OF INSTALLATION	X	—		
3. MATERIAL VERIFICATION OF STRUCTURAL STEEL AND COLD-FORMED STEEL DECK:				
a. FOR STRUCTURAL STEEL, INDENTIFICATION MARKINGS TO CONFORM TO AISC 360	—	X	AISC 360, SECTION M5.5	
b. FOR OTHER STEEL, IDENTIFICATION MARKINGS TO CONFORM TO ASTM STANDARDS SPECIFIED IN THE APPROVED CONSTRUCTION DOCUMENTS	—	X	APPLICABLE ASTM MATERIAL STANDARDS	
C. MANUFACTURER'S CERTIFIED TEST REPORTS	—	X		
4. MATERIAL VERIFICATION OF WELD FILLER MATERIALS:				
a. IDENTIFICATION MARKINGS TO CONFORM TO AWS SPECIFICATION IN THE APPROVED CONSTRUCTION DOCUMENTS.	—	X	AISC 360, SECTION A3.5 AND APPLICABLE AWS A5 DOCUMENTS	—
b. MANUFACTURER'S CERTIFICATE OF COMPLIANCE REQUIRED.	—	X	—	—
5. INSPECTION OF WELDING:				
a. STRUCTURAL STEEL AND COLD FORMED STEEL DECK:				
1) COMPLETE AND PARTIAL JOINT PENETRATION GROOVE WELDS.	X	—	AWS D1.1	1704.3.1
2) MULTIPASS FILLET WELDS	X	—		
3) SINGLE-PASS FILLET WELDS > 5/16"	X	—		
4) SINGLE-PASS FILLET WELDS ≤ 5/16"	—	X		
5) FLOOR AND ROOF DECK WELDS	—	X	AWS D1.3	—
b. REINFORCING STEEL:				
1) VERIFICATION OF WELDABILITY OF REINFORCING STEEL OTHER THAN ASTM A 706	—	X	AWS D1.4 ACI 318: SECTION 3.5.2	—
2) REINFORCING STEEL-RESISTING FLEXURAL AND AXIAL FORCES IN INTERMEDIATE AND SPECIAL MOMENT FRAMES, AND BOUNDARY ELEMENTS OF SPECIAL REINFORCED CONCRETE SHEAR WALLS AND SHEAR REINFORCEMENT.	X	—		
3) SHEAR REINFORCEMENT.	X	—		
4) OTHER REINFORCING STEEL.	—			
6. INSPECTION OF STEEL FRAME JOINT DETAILS FOR COMPLIANCE:		X		
a. DETAILS SUCH AS BRACING AND STIFFENING.	—	X	—	1704.3.2
b. MEMBER LOCATIONS	—	X		
c. APPLICATION OF JOINT DETAILS AT EACH CONNECTION	—	X		

FOR SI: 1 INCH = 25.4 mm.
A. WHERE APPLICABLE, SEE ALSO SECTION 1707.1, SPECAIL INSPECTION FOR SEISMIC RESISTANCE

TABLE 1704.4
REQUIRED VERIFICATION AND INSPECTION OF CONCRETE CONSTRUCTION

VERIFICATION AND INSPECTION	CONTINUOUS	PERIODIC	REFERENCED STANDARD	IBC REFERENCE
1. INSPECTION OF REINFORCING STEEL, INCLUDING PRESTRESSING TENDONS, AND PLACEMENT	—	X	ACI 318: 3.5, 7.1-7.7	1913.4
2. INSPECTION OF REINFORCING STEEL, WELDING IN ACCORDANCE WITH TABLE 1704.3, ITEM 5B	—	—	AWS D1.4 ACI 318: 3.5.2	—
3. INSPECT BOLTS TO BE INSTALLED IN CONCRETE PRIOR TO AND DURING PLANCEMENT OF CONCRETE WHERE ALLOWABLE LOADS HAVE BEEN INCREASED OR WHERE STRENGTH DESIGN IS USED	X	—	ACI 318: 8.1.3, 21.2.8	1911.5 1912.1
4. INSPECTION OF ANCHORS INSTALLED IN HARDENED CONCRETE	—	X	ACI 318: 3.8.6, 8.1.3, 21.2.8	1912.1
5. VERIFYING USE OF REQUIRED DESIGN MIX	—	X	ACI 318: CH. 4, 5.2-5.4	1904.2.2, 1913.2, 1913.3
6. AT THE TIME FRESH CONCRETE IS SAMPLED TO FABRICATE SPECIMENS FOR STRENGTH TESTS, PERFORM SLUMP AND AIR CONTENT TESTS, AND DETERMINE THE TEMPERATURE OF THE CONCRETE	X	—	ASTM C 172 ASTM C 31 ACI 318: 5.6, 5.8	1913.10
7. INSPECTION OF CONCRETE AND SHOTCRETE PLACEMENT FOR PROPER APPLICATION TECHNIQUES	X	—	ACI 318: 5.9, 5.10	1913.6, 1913.7, 1913.8
8. INSPECTION OF MAINTENANCE OF SPECIFIED CURING TEMPERATURE AND TECHNIQUES.	—	X	ACI 318: 5.11-5.13	1913.9
9. INSPECTION OF PRESTRESSED CONCRETE: a. APPLICATION OF PRESTRESSING FORCES. b. GROUTING OF BONDED PRESTRESSING TENDONS IN THE SEISMIC-FORCE-RESISTING SYSTEM.	X X	—	ACI 318: 18.20 ACI 318: 18.18.4	—
10. ERECTION OF PRECAST CONCRETE MEMBERS.	—	X	ACI 318: CH. 16	—
11. VERIFICATION OF IN-SITU CONCRETE STRENGTH, PRIOR TO STRESSING OF TENDONS IN POSTTENSIONED CONCRETE AND PRIOR TO REMOVAL OF SHORES AND FORMS FROM BEAMS AND STRUCTURAL SLABS.	—	X	ACI 318: 6.2	—
12. INSPECT FORMWORK FOR SHAPE, LOCATION AND DIMENSIONS OFTHE CONCRETE MEMBER BEING FORMED	—	X	ACI 318: 6.1.1	—

PICO BRANCH LIBRARY
Virginia Avenue Park
Santa Monica, CA 90404

PROJECT

KoningEizenberg Architecture
1454 25th St, Santa Monica, CA 90404
310.828.6131 info@kearch.com
310.828.0719 fax www.kearch.com

ARCHITECT'S PROJECT NO.
1001

ARCHITECT

All designs, ideas, arrangements and plans indicated by these drawings are the property and copyright of the Architect and shall neither be used on any other work nor be disclosed to any other person for any use whatsoever without written permission.

Koning Eizenberg Architecture and/or its principals and employees waives any and all liability or responsibility for problems that may occur when these plans, drawings, specifications, and/or designs are followed without the professional's guidance with ambiguities, or conflicts which are alleged.

Thornton Tomasetti
Thornton Tomasetti, Inc.
6080 Center Drive, Suite 260
Los Angeles CA 90045-9204
T 310.665.0010 F 310.665.0101

CONSULTANT

City of Santa Monica
Architecture Services
1437 4TH STREET, SUITE 300
SANTA MONICA, CA 90401
TEL. (310) 458-2205
FAX. (310) 399-1541
architecture@smgov.net

SUBMITTED BY : DATE : ________ 20 __

APPROVED BY : DATE : ________ 20 __
Miriam Mulder,
Architecture Services Manager

CITY OF SANTA MONICA
DEPARTMENT OF PUBLIC WORKS

REVIEWED BY : DATE : ________ 20 __

REVIEWED BY : DATE : ________ 20 __

REVIEWED BY : DATE : ________ 20 __

CITY CLIENT

NO.	DATE	BY	DESCRIPTION

REVISIONS

ISSUE
65% CONSTRUCTION DOCUMENTS / BID SET

DATE
01/23/2012

DRAWING NO. **6693**

SHEET OF SHEETS

SHEET TITLE
GENERAL NOTES

SHEET NO.
S0.03

File Path: C:\Scratch\TT-S10502-PICO BRANCH LIBRARY-CENTRAL_tweir.rvt
ON: 1/23/2012 12:12:10 PM

ABBREVIATIONS

ABBREVIATION	DESCRIPTION
ABV	ABOVE
ADDL	ADDITIONAL
ADJ	ADJACENT
ALT	ALTERNATE
APPRX	APPROXIMATE
ARCH	ARCHITECT OR ARCHITECTURAL
B/	BOTTOM OF
B/B	BACK TO BACK
BLDG	BUILDING
BLK	BLOCK
BLKG	BLOCKING
BLW	BELOW
BM	BEAM
BOT	BOTTOM
BRDG	BRIDGING
BRG	BEARING
BTWN	BETWEEN
C/C	CENTER TO CENTER
CIP	CAST-IN-PLACE
CL	CENTER LINE
CLR	CLEAR OR CLEARANCE
CMU	CONCRETE MASONRY UNIT
COL	COLUMN
COMP	COMPRESSION
CONC	CONCRETE
CONN	CONNECTION(S)
CONST	CONSTRUCTION
CONT	CONTINUOUS
db	REINFORCING BAR DIAMETER
DBL	DOUBLE
DEG	DEGREE(S)
DET	DETAIL
DIA	DIAMETER
DIAG	DIAGONAL
DIM(S)	DIMENSION(S)
DL	DEAD LOAD
DWG(S)	DRAWING(S)
DWL	DOWEL(S)
EA	EACH
ECC	ECCENTRICITY
EF	EACH FACE
EL	ELEVATION
ELEC	ELECTRICAL
ENGR	ENGINEER
EOS	EDGE OF SLAB
EQ	EQUAL
EQUIP	EQUIPMENT
EW	EACH WAY
EXP	EXPANSION
EXST	EXISTING
EXT	EXTERIOR
F/F	FACE TO FACE
FIN	FINISH(ED)
FLR	FLOOR
FND	FOUNDATION
FP	FIREPROOF(ING)
FS	FAR SIDE
FTG	FOOTING
GA	GAGE, GAUGE
GALV	GALVANIZED
GB	GRADE BEAM
GEN	GENERAL
GLB	GLU LAM BEAM
GR	GRADE
HK	HOOK
HORIZ	HORIZONTAL
HP	HIGH POINT
HT	HEIGHT
ID	INSIDE DIAMETER
IF	INSIDE FACE
INFO	INFORMATION
INT	INTERIOR
INTRM	INTERMEDIATE
JST(S)	JOIST(S)
JT	JOINT
K	KIPS (1,000 POUNDS)
KLF	KIP PER LINEAR FOOT
KSF	KIP PER SQUARE FOOT
LL	LIVE LOAD
LLH	LONG LEG HORIZONTAL

ABBREVIATION	DESCRIPTION
LLV	LONG LEG VERTICAL
LONG	LONGITUDINAL
LP	LOW POINT
LW	LIGHTWEIGHT
LWC	LIGHTWEIGHT CONCRETE
M	MOMENT
MATL	MATERIAL
MAX	MAXIMUM
MC	MOMENT CONNECTION(S)
MECH	MECHANICAL
MEP	MECHANICAL, ELECTRICAL, PLUMBING, FIRE PROTECTION
MEZZ	MEZZANINE
MFR	MANUFACTURER
MID	MIDDLE
MIN	MINIMUM
MISC	MISCELLANEOUS
NIC	NOT IN CONTRACT
NO	NUMBER
NOM	NOMINAL
NS	NEAR SIDE
NTS	NOT TO SCALE
NW	NORMAL WEIGHT
NWC	NORMALWEIGHT CONCRETE
OC	ON CENTER
OD	OUTSIDE DIAMETER
OF	OUTSIDE FACE
OH	OPPOSITE HAND
OPNG(S)	OPENING(S)
OPP	OPPOSITE
OSL	OUTSTANDING LEG
P/T	POST-TENSIONED
PC	PIECE
PCY	POUNDS PER CUBIC YARD
PERP	PERPENDICULAR
PG	PLATE GIRDER
PL	PLATE
PRC	PRECAST
PRLL	PARALLEL
PSF	POUNDS PER SQUARE FOOT
PSI	POUNDS PER SQUARE INCH
PT	POINT
RAD	RADIUS
REF	REFERENCE
REINF	REINFORCE(D) (ING) OR (MENT)
REQD	REQUIRED
SCHED	SCHEDULE(D)
SDL	SUPERIMPOSED DEAD LOAD
SECT	SECTION
SER	STRUCTURAL ENGINEER OF RECORD
SF	SQUARE FOOT (FEET)
SHT	SHEET
SIM	SIMILAR
SLRS	SEISMIC LOAD RESISTING SYSTEM
SOG	SLAB ON GRADE
SP	SPACE
SPEC(S)	SPECIFICATION(S)
STD	STANDARD
STL	STEEL
STR	STRUCTURE
STRCTL	STRUCTURAL
SYM	SYMMETRICAL
T	TENSION
T&B	TOP AND BOTTOM
T/	TOP OF
TEMP	TEMPERATURE OR TEMPORARY
TEN	TENSION
THK	THICK OR THICKNESS
THRD	THREAD
TYP	TYPICAL
UON	UNLESS OTHERWISE NOTED
V	SHEAR
VERT	VERTICAL
VIF	VERIFY IN FIELD
W/	WITH
W/O	WITHOUT
WD	WOOD
WP	WORK POINT
WPFG	WATERPROOFING
WS	WATERSTOP
WWR	WELDED WIRE REINFORCEMENT

File Path: C:\Scratch\T.S.10502-PICO BRANCH LIBRARY-CENTRAL_lwear.rvt
CK: 1/23/2012 12:12:11 PM

PICO BRANCH LIBRARY
Virginia Avenue Park
Santa Monica, CA 90404

PROJECT

KoningEizenberg Architecture
1454 25th St, Santa Monica, CA 90404
310.828.6131 info@kearch.com
310.828.0719 fax www.kearch.com

ARCHITECT'S PROJECT NO.
1001

ARCHITECT

All designs, ideas, arrangements and plans indicated by these drawings are the property and copyright of the Architect and shall neither be used on any other work nor be disclosed to any other person for any use whatsoever without written permission.

Koning Eizenberg Architecture and/or its principals and employees waives any and all liability or responsibility for problems that may occur when these plans, drawings, specifications, and/or designs are followed without the professional's guidance with ambiguities, or conflicts which are alleged.

Thornton Tomasetti
Thornton Tomasetti, Inc.
6080 Center Drive, Suite 260
Los Angeles CA 90045-9204
T 310.665.0010 **F** 310.665.0101

CONSULTANT

City of Santa Monica Architecture Services
1437 4TH STREET, SUITE 300
SANTA MONICA, CA 90401
TEL. (310) 458-2205
FAX. (310) 399-1541
architecture@smgov.net

DATE : _____ 20 __
SUBMITTED BY :

DATE : _____ 20 __
APPROVED BY :
Miriam Mulder,
Architecture Services Manager

CITY OF SANTA MONICA
DEPARTMENT OF PUBLIC WORKS

REVIEWED BY : DATE : _____ 20 __

REVIEWED BY : DATE : _____ 20 __

REVIEWED BY : DATE : _____ 20 __

CITY CLIENT

NO.	DATE	BY	DESCRIPTION

REVISIONS

ISSUE
65% CONSTRUCTION DOCUMENTS / BID SET

DATE
01/23/2012

DRAWING NO. **6693**

SHEET OF SHEETS

SHEET TITLE
ABBREVIATIONS

SHEET NO.
S0.04

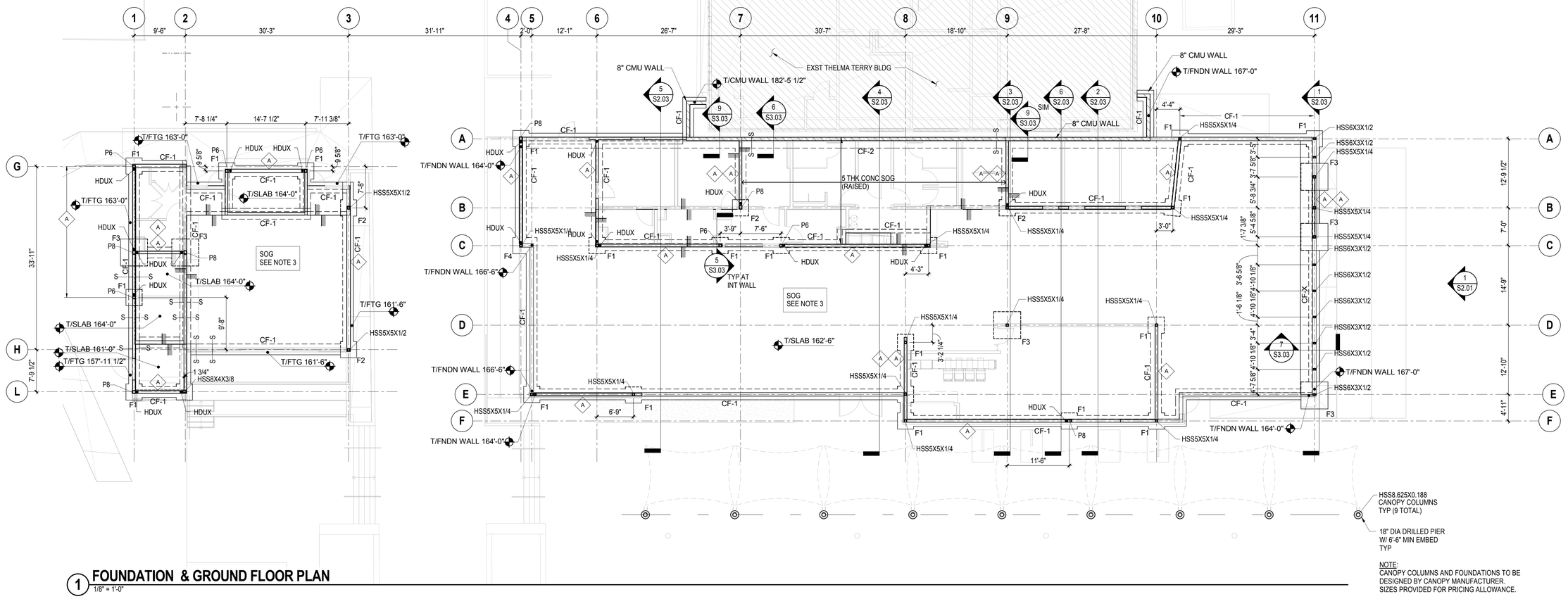

NOTE:
CANOPY COLUMNS AND FOUNDATIONS TO BE DESIGNED BY CANOPY MANUFACTURER. SIZES PROVIDED FOR PRICING ALLOWANCE.

1 FOUNDATION & GROUND FLOOR PLAN

1/8" = 1'-0"

PLAN NOTES:

1. TOP OF SLAB ELEV = SEE PLAN.
2. T/FOOTINGS = -1'-0" BELOW T/SOG UON.
3. SLAB-ON-GRADE (SOG) = 5" THK, f'c = 3,000 psi, REINFORCED WITH #4@12" OC EA WAY ON COMPACTED FILL. SUBSTRATE RECOMMENDATIONS PER GEOTECHNICAL REPORT
4. VERIFY LOCATION OF UNDERGROUND UTILITES BEFORE EXCAVATION. NOTIFY ARCHITECT PRIOR TO EXCAVATION IN THE EVENT SUCH UTILITIES ARE ENCOUNTERED.
5. SLAB CONSTRUCTION AND CONTROL JOINT LOCATIONS SHALL BE APPROVED BY THE ARCHITECT PRIOR TO PLACING ANY CONCRETE.
6. SEE MEP DRAWINGS FOR PIPE OR CONDUITS UNDER STRIP FOOTINGS OR THROUGH FOUNDATION WALLS. MAINTAIN ADJACENT FOOTINGS AND DO NOT DISTURB SUBGRADE OF FOOTINGS DURING EXCAVATION AND PIPE CONSTRUCTION.
7. SILL BOLTS ARE REQUIRED AT ALL STUD WALLS SHOWN ON STRUCTURAL PLANS. SEE S7._ FOR DETAILS.
8. SEE ARCH DRAWINGS FOR NON-LOAD BEARING PARTITIONS.
9. STRUCTURAL STUD WALLS SHALL BE 2x6 STUDS AT 16" OC UON. SEE S7.__ FOR TYPICAL WALL FRAMING. SEE ARCH DRAWINGS FOR NON-LOAD BEARING PARTITION WALLS.
10. ALL EXTERIOR WALLS SHALL HAVE 1/2" PLYWOOD SHEATHING ON EXTERIOR FACE OF STUDS UNLESS OTHEREWISE NOTED. SEE S7.__ FOR SCHEDULE AND MIN NAILING.
11. SEE ARCH DRAWINGS FOR WEATHER PROTECTION COATINGS AT EXPOSED WOOD FRAMING.

LEGEND:

1. T/SLAB +X'-X" — INDICATES ELEVATION MARK
2. INDICATES SHEARWALL SEE SCHEDULE ON S7.04; INDICATES SHEATHING SIDE; INDICATES BEARING AND/OR SHEARWALL
3. HDUX — INDICATES HOLDOWN SEE S7.04 FOR SCHEDULE AND DETAILS
4. STEEL COLUMN; PIER/PILASTER ABOVE; PLX EL X'-XX"; FX EL X'-XX"; FOOTING
   - PIER/PILASTER MARK FOR DETAILS SEE SX.XX
   - T/PIER OR PILASTER
   - FOOTING MARK SEE FOOTING SCHEDULE ON S3.03
   - TOP OF FOOTING EL WHERE DIFFERENT FROM TYPICAL
5. S — S — INDICATES STEP ON BOTTOM OF CONTINUOUS FOOTING SEE DETAIL 6 ON S3.02
6. PX — INDICATES WOOD POST SEE S7.03 FOR POST SCHEDULE SEE S7.04 FOR POST REQUIREMENTS AT HOLDOWNS.

SHEET REFERENCE:

1. GENERAL NOTES	S0.0X
2. ELEVATIONS & SECTIONS	S2.XX
3. TYPICAL CONCRETE DETAILS	S3.XX
4. TYPICAL STEEL DETAILS	S5.XX
5. TYPICAL CMU DETAILS	S6.XX
6. TYPICAL WOOD DETAILS	S7.XX

PROJECT NORTH N

PICO BRANCH LIBRARY

Virginia Avenue Park
Santa Monica, CA 90404

PROJECT

KoningEizenberg Architecture
1454 25th St, Santa Monica, CA 90404
310.828.6131 info@kearch.com
310.828.0719 fax www.kearch.com

ARCHITECT'S PROJECT NO.
1001

ARCHITECT

All designs, ideas, arrangements and plans indicated by these drawings are the property and copyright of the Architect and shall neither be used on any other work nor be disclosed to any other person for any use whatsoever without written permission.

Koning Eizenberg Architecture and/or its principals and employees waives any and all liability or responsibility for problems that may occur when these plans, drawings, specifications, and/or designs are followed without the professional's guidance with ambiguities, or conflicts which are alleged.

Thornton Tomasetti
Thornton Tomasetti, Inc.
6080 Center Drive, Suite 260
Los Angeles CA 90045-9204
T 310.665.0010 F 310.665.0101

CONSULTANT

City of Santa Monica Architecture Services
1437 4TH STREET, SUITE 300
SANTA MONICA, CA 90401
TEL. (310) 458-2205
FAX. (310) 399-1541
architecture@smgov.net

DATE : _____ 20 __
SUBMITTED BY :

DATE : _____ 20 __
APPROVED BY :
Miriam Mulder,
Architecture Services Manager

CITY OF SANTA MONICA
DEPARTMENT OF PUBLIC WORKS

REVIEWED BY : DATE : _____ 20 __

REVIEWED BY : DATE : _____ 20 __

REVIEWED BY : DATE : _____ 20 __

CITY CLIENT

NO.	DATE	BY	DESCRIPTION

REVISIONS

ISSUE
65% CONSTRUCTION DOCUMENTS / BID SET

DATE
01/23/2012

DRAWING NO. **6693**

SHEET OF SHEETS

SHEET TITLE
FOUNDATION & GROUND FLOOR PLAN

SHEET NO.
S1.00

File Path: C:\Scratch\TT-S 10502-PICO BRANCH LIBRARY-CENTRAL_Meir.rvt
ON: 1/23/2012 12:13 PM

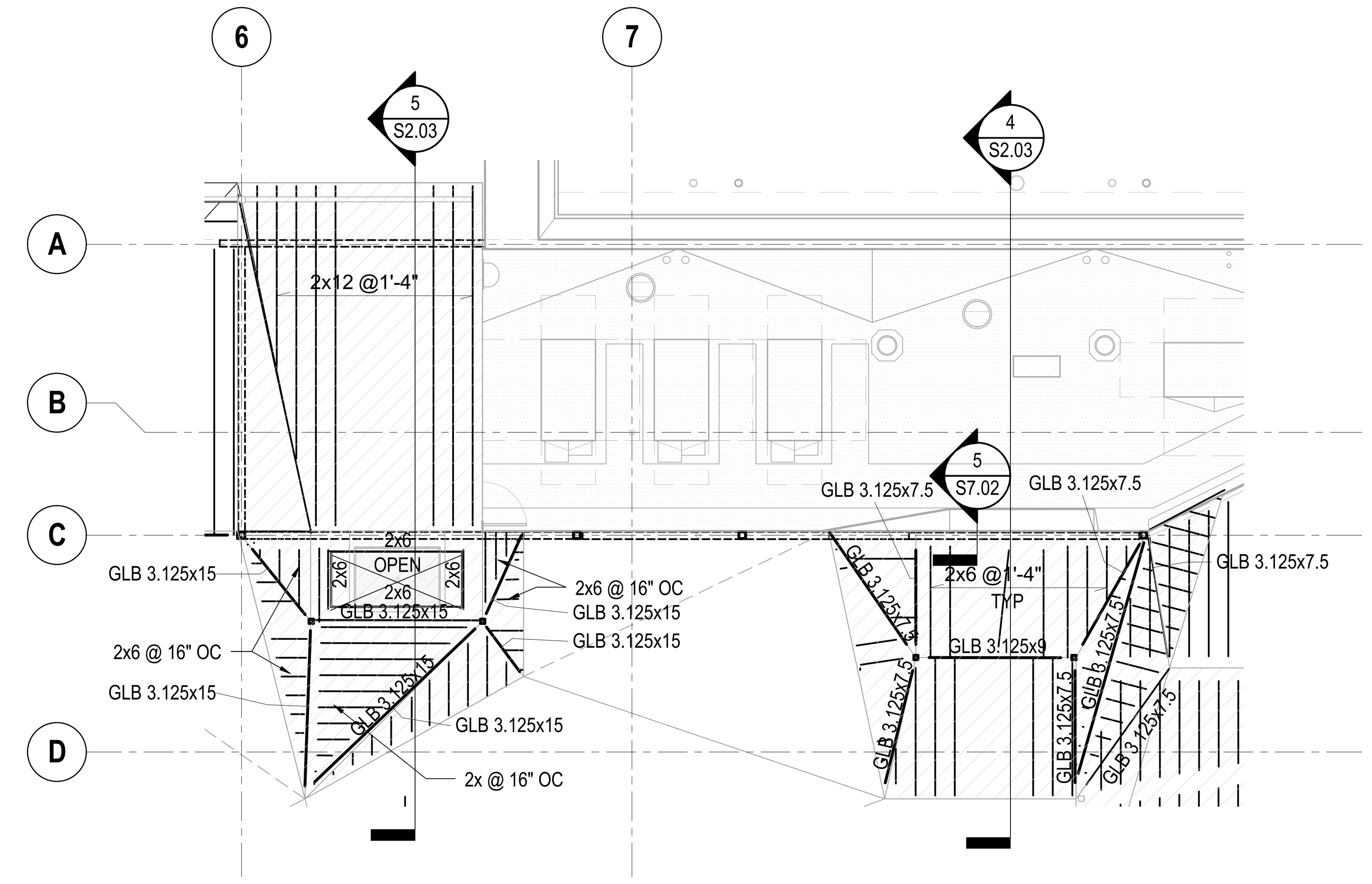

2 SKYLIGHT FRAMING PARTIAL PLAN
1/8" = 1'-0"

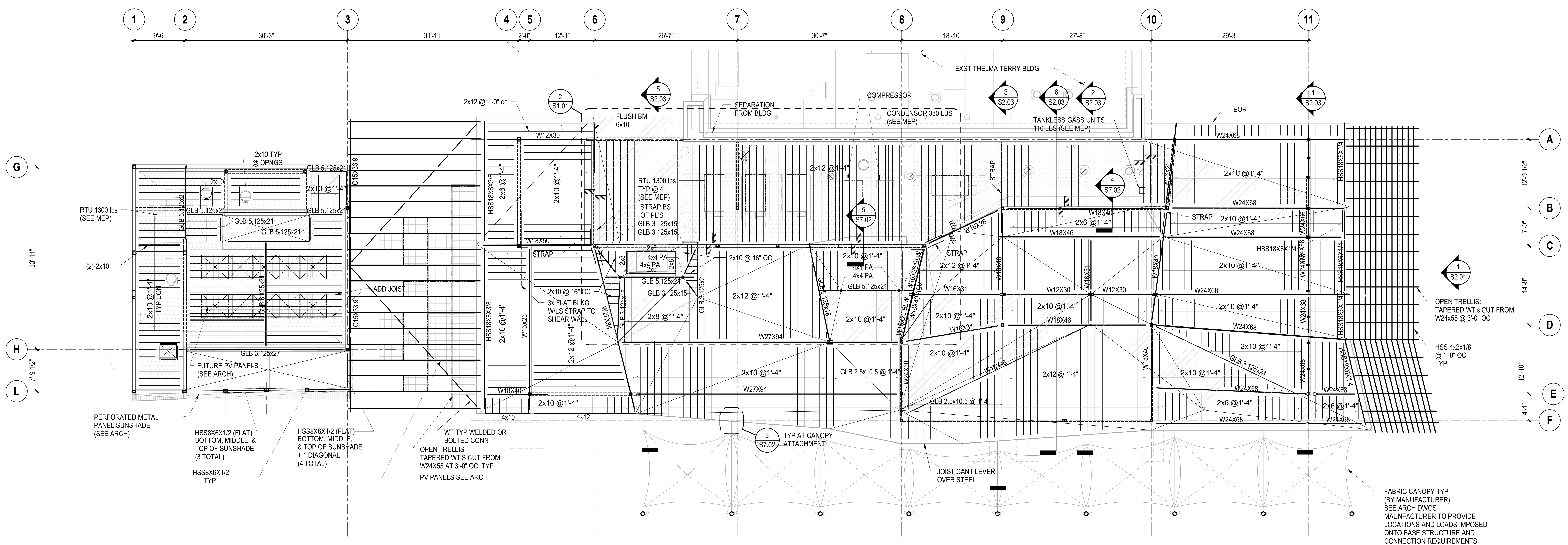

1 ROOF FRAMING PLAN
1/8" = 1'-0"

PLAN NOTES:

1. T/ROOF ELEVATION = VARIES SEE PLAN.
2. T/ROOF ELEVATION = T/ROOF 1/2" PLYWOOD SHEATHING.
3. STRUCTURAL LOAD-BEARING STUD WALLS SUPPORTING THE ROOF ARE SHOWN THUS ===== ON PLAN. SEE ARCH DRAWINGS FOR NON-LOAD BEARING PARTITIONS.
4. VERIFY ALL DIMENSIONS SHOWN AND NOT SHOWN WITH ARCH DRAWINGS.
5. FOR ROOFTOP EQUIPMENT AND ROOF OPENINGS, SEE ARCH AND MEP DRAWINGS. CONTRACTOR TO COORDINAE FINAL LOCATION OF EQUIPMENT SUPPORT BEAMS WITH EQUIPMENT REQUIREMENTS.
6. WHERE RIPPERS ARE ATTACHED TO TOP OF ROOF JOISTS (I.E. TO OBTAIN SLOPE FOR DRAINAGE), THE RIPPERS SHALL BE NAILED TO THE JOIST WITH 10d AT SPACING REQUIRED FOR DIAPHRAGM SHEAR. WHEN THE RIPPERS BECOME MORE THAN 1 1/2" DEEP, SIDE PLATES SHALL BE NAILED TO JOISTS AT SPACING REQUIRED TO TRANSFER DIAPHRAGM SHEAR.

SHEET REFERENCE:

1. GENERAL NOTES	S0.0X
2. ELEVATIONS & SECTIONS	S2.XX
3. TYPICAL CONCRETE DETAILS	S3.XX
4. TYPICAL STEEL DETAILS	S5.XX
5. TYPICAL CMU DETAILS	S6.XX
6. TYPICAL WOOD DETAILS	S7.XX

LEGEND:

1. T/S +X'-X" INDICATES TOP OF SHEATHING ELEVATION
2. T/STL+X'-X" INDICATES TOP OF STEEL ELEVATION
3. INDICATES TOP STEEL SPLICE
4. GLB INDICATES GLULAM BEAMS
5. INDICATES GRAVITY MOMENT CONNECTION

PROJECT NORTH
N

PICO BRANCH LIBRARY
Virginia Avenue Park
Santa Monica, CA 90404

PROJECT

KoningEizenberg Architecture
1454 25th St, Santa Monica, CA 90404
310.828.6131 info@kearch.com
310.828.0719 fax www.kearch.com

ARCHITECT'S PROJECT NO.
1001

ARCHITECT

All designs, ideas, arrangements and plans indicated by these drawings are the property and copyright of the Architect and shall neither be used on any other work nor be disclosed to any other person for any use whatsoever without written permission.

Koning Eizenberg Architecture and/or its principals and employees waives any and all liability or responsibility for problems that may occur when these plans, drawings, specifications, and/or designs are followed without the professional's guidance with ambiguities, or conflicts which are alleged.

Thornton Tomasetti
Thornton Tomasetti, Inc.
6080 Center Drive, Suite 260
Los Angeles CA 90045-9204
T 310.665.0010 F 310.665.0101

CONSULTANT

City of Santa Monica
Architecture Services
1437 4TH STREET, SUITE 300
SANTA MONICA, CA 90401
TEL. (310) 458-2205
FAX. (310) 399-1541
architecture@smgov.net

DATE : 20
SUBMITTED BY :

DATE : 20
APPROVED BY :
Miriam Mulder,
Architecture Services Manager

CITY OF SANTA MONICA
DEPARTMENT OF PUBLIC WORKS

REVIEWED BY : DATE : 20

REVIEWED BY : DATE : 20

REVIEWED BY : DATE : 20

CITY CLIENT

NO.	DATE	BY	DESCRIPTION

REVISIONS

ISSUE
65% CONSTRUCTION DOCUMENTS / BID SET

DATE
01/23/2012

DRAWING NO. **6693**

SHEET OF SHEETS

SHEET TITLE
ROOF FRAMING PLAN

SHEET NO.
S1.01

File Path: C:\Scratch\TT-S10502-PICO BRANCH LIBRARY-CENTRAL_tweir.rvt
ON: 1/23/2012 12:12:17 PM

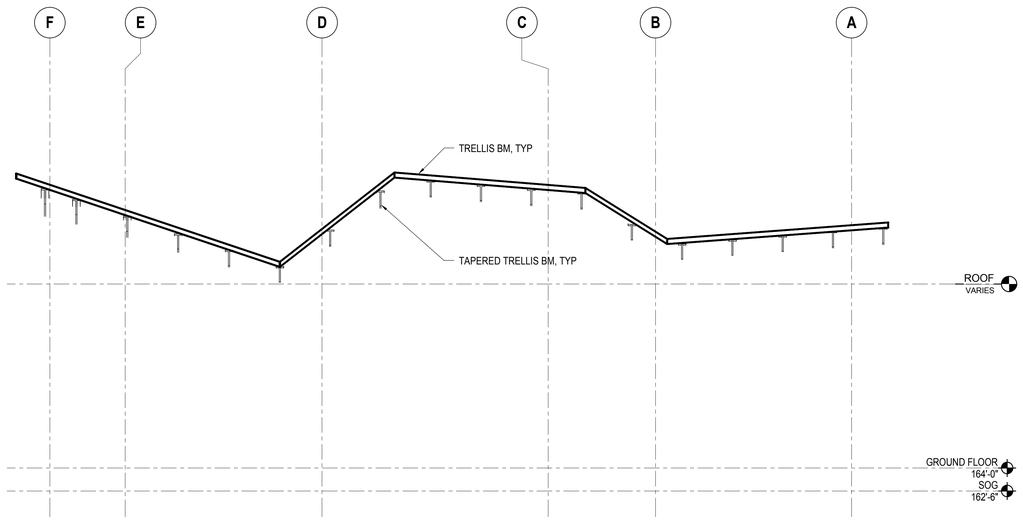

1 **EAST TRELLIS ELEVATION**
1/4" = 1'-0"

File Path: C:\Scratch\TT-S10502-PICO BRANCH LIBRARY-CENTRAL_lwser.rvt
ON: 1/23/2012 12:12:18 PM

PICO BRANCH LIBRARY

Virginia Avenue Park
Santa Monica, CA 90404

PROJECT

KoningEizenberg Architecture
1454 25th St, Santa Monica, CA 90404

310.828.6131 info@kearch.com
310.828.0719 fax www.kearch.com

ARCHITECT'S PROJECT NO.
1001

ARCHITECT

All designs, ideas, arrangements and plans indicated by these drawings are the property and copyright of the Architect and shall neither be used on any other work nor be disclosed to any other person for any use whatsoever without written permission.

Koning Eizenberg Architecture and/or its principals and employees waives any and all liability or responsibility for problems that may occur when these plans, drawings, specifications, and/or designs are followed without the professional's guidance with ambiguities, or conflicts which are alleged.

Thornton Tomasetti
Thornton Tomasetti, Inc.
6080 Center Drive, Suite 260
Los Angeles CA 90045-9204
T 310.665.0010 **F** 310.665.0101

CONSULTANT

City of Santa Monica
Architecture Services

1437 4TH STREET, SUITE 300
SANTA MONICA, CA 90401
TEL. (310) 458-2205
FAX. (310) 399-1541
architecture@smgov.net

DATE : 20
SUBMITTED BY :

DATE : 20
APPROVED BY :
Miriam Mulder,
Architecture Services Manager

CITY OF SANTA MONICA
DEPARTMENT OF PUBLIC WORKS

REVIEWED BY : DATE : 20

REVIEWED BY : DATE : 20

REVIEWED BY : DATE : 20

CITY CLIENT

NO.	DATE	BY	DESCRIPTION

REVISIONS

ISSUE
65% CONSTRUCTION DOCUMENTS / BID SET

DATE
01/23/2012

DRAWING NO. **6693**

SHEET OF SHEETS

SHEET TITLE
ELEVATIONS

SHEET NO.
S2.01

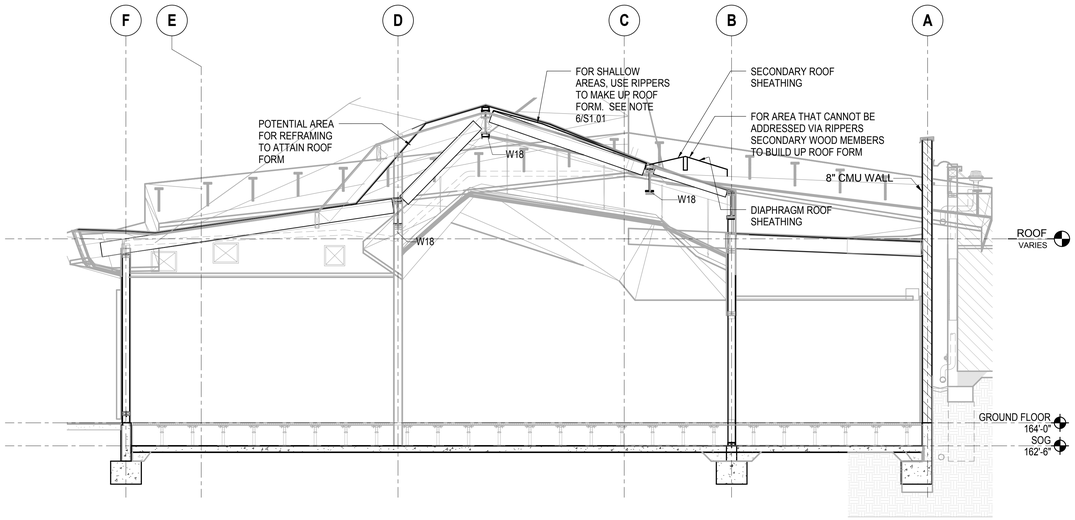

6 SECTION EAST OF GRIDLINE 7
1/4" = 1'-0"

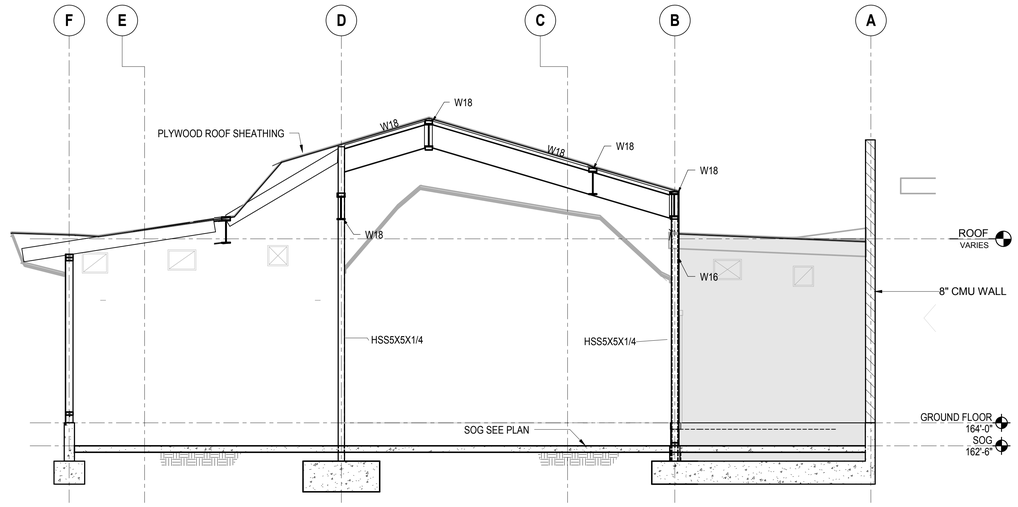

3 SECTION NEAR GRIDLINE 8
1/4" = 1'-0"

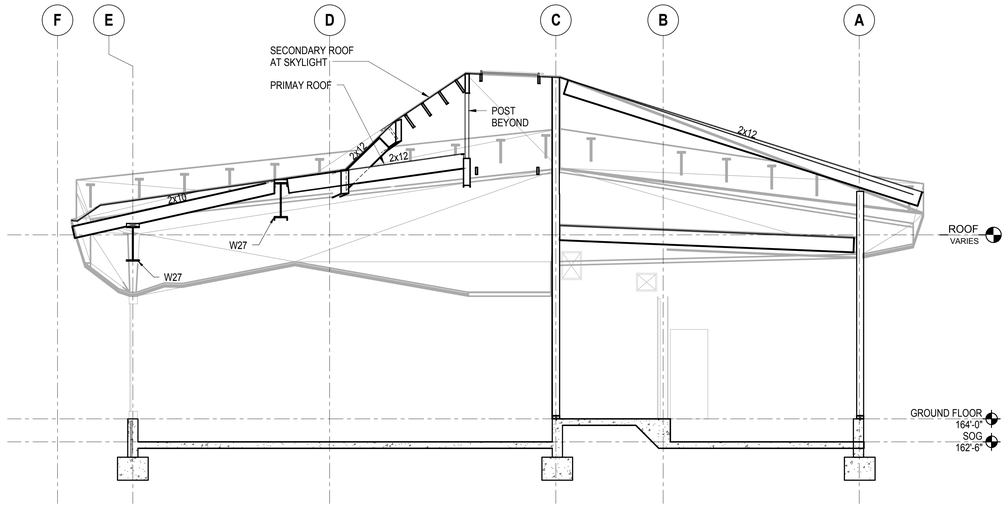

5 SECTION NEAR GRIDLINE 6
1/4" = 1'-0"

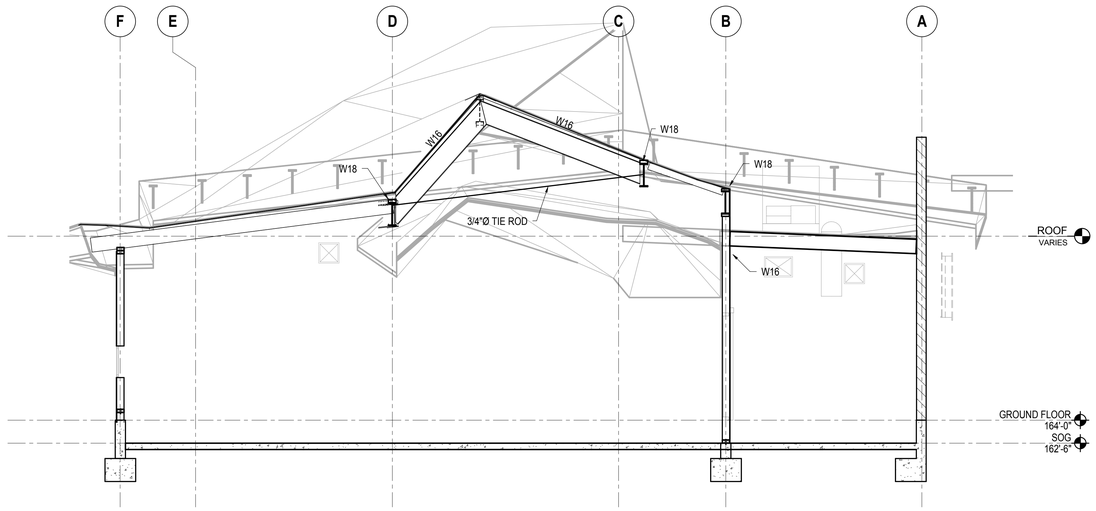

2 SECTION BETWEEN GRIDLINE 8 AND 9
1/4" = 1'-0"

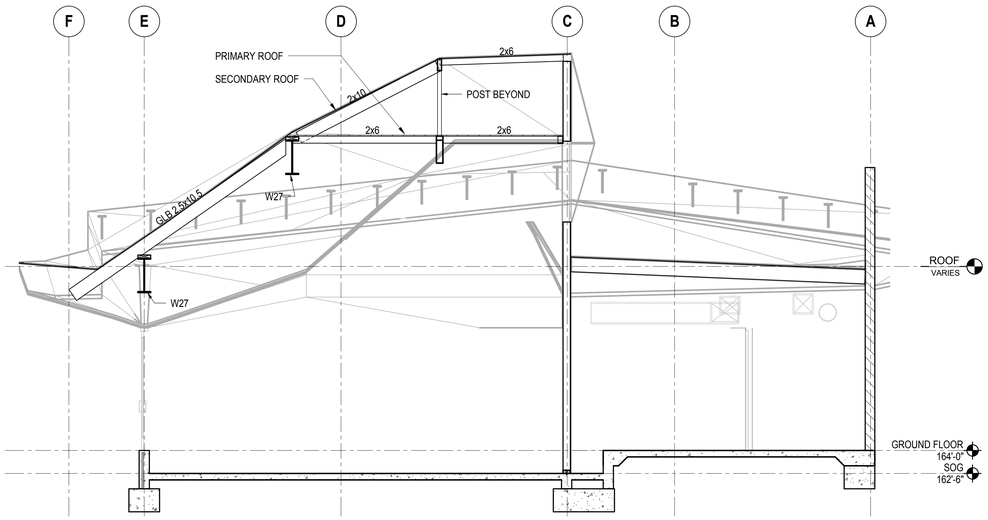

4 SECTION NEAR GRIDLINE 7
1/4" = 1'-0"

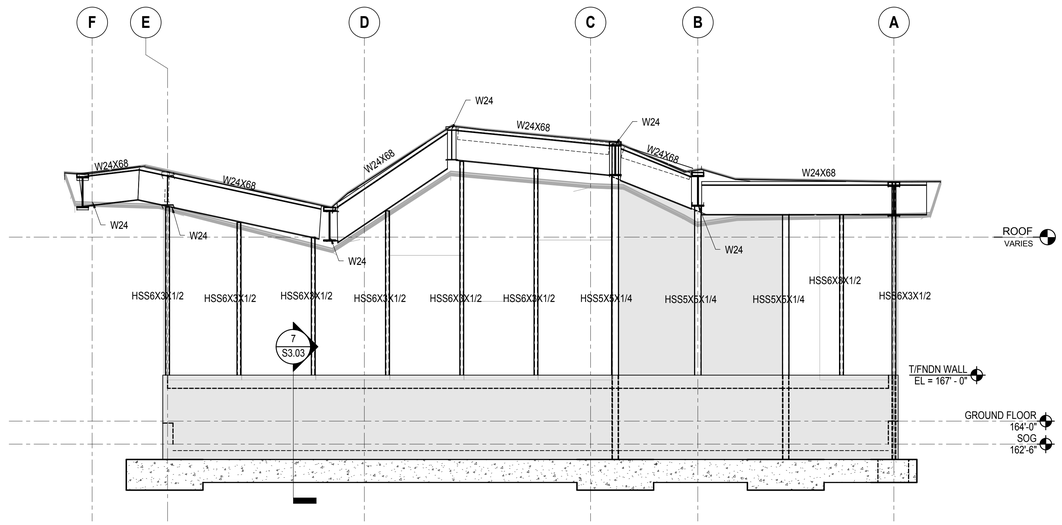

1 SECTION AT GRIDLINE 11
1/4" = 1'-0"

PICO BRANCH LIBRARY

Virginia Avenue Park
Santa Monica, CA 90404

PROJECT

KoningEizenberg Architecture
1454 25th St, Santa Monica, CA 90404

310.828.6131 info@kearch.com
310.828.0719 fax www.kearch.com

ARCHITECT'S PROJECT NO.
1001

ARCHITECT

All designs, ideas, arrangements and plans indicated by these drawings are the property and copyright of the Architect and shall neither be used on any other work nor be disclosed to any other person for any use whatsoever without written permission.

Koning Eizenberg Architecture and/or its principals and employees waives any and all liability or responsibility for problems that may occur when these plans, drawings, specifications, and/or designs are followed without the professional's guidance with ambiguities, or conflicts which are alleged.

Thornton Tomasetti
Thornton Tomasetti, Inc.
6080 Center Drive, Suite 260
Los Angeles CA 90045-9204
T 310.665.0010 **F** 310.665.0101

CONSULTANT

City of Santa Monica
Architecture Services
1437 4TH STREET, SUITE 300
SANTA MONICA, CA 90401
TEL. (310) 458-2205
FAX. (310) 399-1541
architecture@smgov.net

SUBMITTED BY : DATE : 20

APPROVED BY : DATE : 20
Miriam Mulder,
Architecture Services Manager
CITY OF SANTA MONICA
DEPARTMENT OF PUBLIC WORKS

REVIEWED BY : DATE : 20

REVIEWED BY : DATE : 20

REVIEWED BY : DATE : 20

CITY CLIENT

NO.	DATE	BY	DESCRIPTION

REVISIONS

ISSUE
65% CONSTRUCTION DOCUMENTS / BID SET

DATE
01/23/2012

DRAWING NO. **6693**

SHEET OF SHEETS

SHEET TITLE
SECTIONS

SHEET NO.
S2.03

File Path: C:\Scratch\TT-S-10502-PICO BRANCH LIBRARY-CENTRAL_lwser.rvt
ON: 1/23/2012 12:12:22 PM

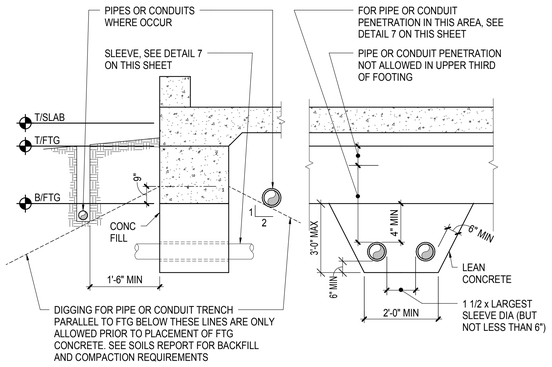

NOTES:

1. CONTRACTOR SHALL BE RESPONSIBLE FOR SHORING OR OTHERWISE MAINTAINING THE SIDES OF THE EXCAVATION FROM CAVE-IN UNTIL ALL BACKFILL IS COMPLETED.
2. ALL PIPES AND CONDUITS SHALL CLEAR SLEEVE BY 1/2" ALL AROUND, UON.
3. FIRE SERVICE LINES SHALL CLEAR SLEEVES 2" ALL AROUND.
4. TRENCHES FOR PIPES AND CONDUITS WITH INVERT ELEVATION BELOW 2'-6" FROM BOTTOM OF FOOTING SHALL BE FILLED PER GEOTECHNICAL ENGINEER'S RECOMMENDATIONS.

9 PIPE OR CONDUIT CLEARANCE AT FOUNDATIONS

1" = 1'-0"

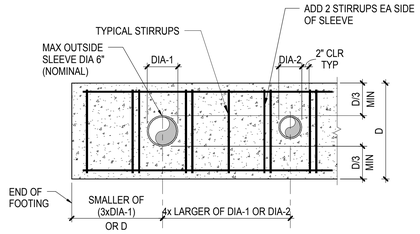

a PIPE OR CONDUIT PENETRATION THRU MIDDLE THIRD

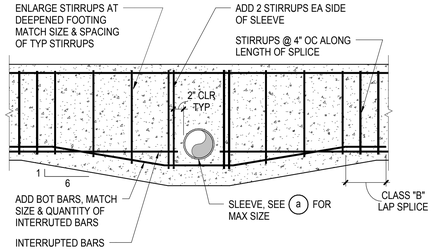

b PIPE OR CONDUIT PENETRATION BELOW MIDDLE THIRD

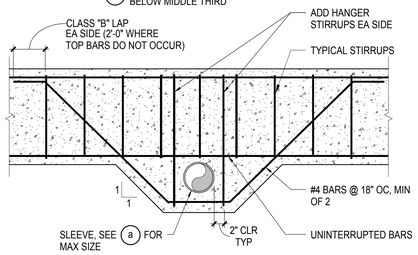

c PIPE OR CONDUIT BELOW BOTTOM REINFORCEMENT

NOTES:

1. DO NOT CUT REINFORCING AT a OR c . ONLY CUT INTERRUPTED REINFORCING AT b .
2. PROVIDE MINIMUM 2" CLEAR BETWEEN SLEEVE AND REINFORCING.
3. SEE DETAIL 1 ON THIS SHEET FOR SLEEVE-TO-PIPE/CONDUIT CLEARANCE & INFO NOT NOTED.
4. CAULK SEAL GAP AT SLEEVE-TO-PIPE/CONDUIT INTERFACE ON EXTERIOR SIDE OF FOOTING.
5. IF PIPE OR CONDUIT PENETRATION OCCURS AT EITHER TOP OR BOTTOM REBAR SPLICE LOCATION PROVIDE 2 ADDITIONAL SHEAR STIRRUPS FOR A TOTAL OF 4 SHEAR STIRRUPS ON EACH SIDE OF PENETRATION.
6. IF PIPE OR CONDUIT SLEEVE IS ASTM A53 SCHEDULE 40 OR GREATER PIPE, ADDITIONAL STIRRUPS MAY BE ELIMINATED. SLEEVE SHALL BE GALVANIZED.

7 PIPE OR CONDUIT PENETRATIONS THRU CONTINUOUS FOUNDATIONS

1" = 1'-0"

6 CONCRETE CURB AND WALL INTERSECTIONS

NOT TO SCALE

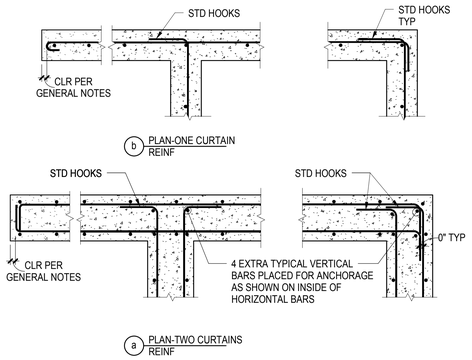

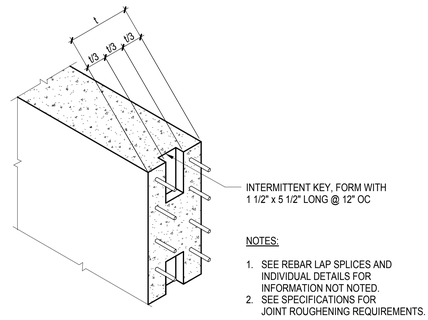

NOTES:

1. SEE REBAR LAP SPLICES AND INDIVIDUAL DETAILS FOR INFORMATION NOT NOTED.
2. SEE SPECIFICATIONS FOR JOINT ROUGHENING REQUIREMENTS.

a CONCRETE WALL - VERTICAL

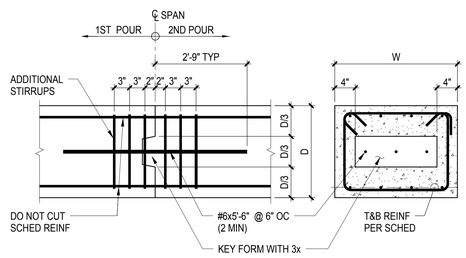

b BEAMS AND CONTINUOUS FOUNDATIONS

4 CONSTRUCTION JOINTS

NOT TO SCALE

BAR SIZE	MAIN REINFORCEMENT: 90° HOOK LENGTH "L"	MAIN REINFORCEMENT: INSIDE DIA "D1"	MAIN REINFORCEMENT: 180° HOOK LENGTH "L"	STIRRUPS & TIES: 90° HOOK LENGTH "L"	STIRRUPS & TIES: INSIDE DIA "D2"	STIRRUPS & TIES: 135° HOOK LENGTH "L"	Ldh, DEVELOPMENT LENGTH (1) CONCRETE STRENGTH: f'c = 3000 PSI	Ldh, DEVELOPMENT LENGTH (1) CONCRETE STRENGTH: f'c = 4000 PSI
#3	4 1/2"	2 1/4"	2 1/2"	3"	1 1/2"	3"	0'-8"	0'-7"
#4	6"	3"	2 1/2"	3"	2"	3"	0'-11"	0'-9"
#5	7 1/2"	3 3/4"	2 1/2"	3 3/4"	2 1/2"	3 3/4"	1'-2"	1'-0"
#6	9"	4 1/2"	3"	9"	4 1/2"	4 1/2"	1'-4"	1'-2"
#7	10 1/2"	5 1/4"	3 1/2"	10 1/2"	5 1/4"	5 1/4"	1'-7"	1'-5"
#8	1'-0"	6"	4"	1'-0"	6"	6"	1'-10"	1'-7"
#9	1'-1 1/2"	9 1/2"	4 1/2"	-	-	-	2'-1"	1'-9"
#10	1'-3 1/4"	10 3/4"	5 1/4"	-	-	-	2'-3"	2'-0"
#11	1'-5"	1'-0"	5 3/4"	-	-	-	2'-6"	2'-2"

NOTES:

1. DEVELOPMENT LENGTHS IN TABLE ARE FOR NORMAL WEIGHT CONCRETE. WHERE LIGHTWEIGHT AGGREGATE CONCRETE IS USED, INCREASE DEVELOPMENT LENGTH BY 30%.

3 STANDARD HOOKS

NOT TO SCALE

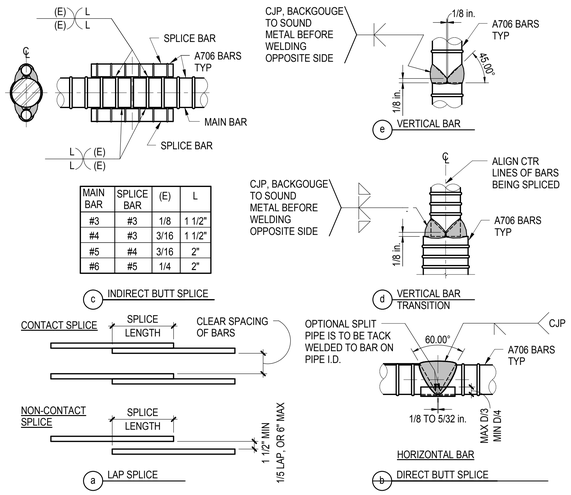

MAIN BAR	SPLICE BAR	(E)	L
#3	#3	1/8	1 1/2"
#4	#3	3/16	1 1/2"
#5	#4	3/16	2"
#6	#5	1/4	2"

c INDIRECT BUTT SPLICE

CONCRETE STRENGTH	f'c = 3000 PSI				f'c = 4000 PSI			
CLASS OF LAP SPLICE	CLASS "A"		CLASS "B"		CLASS "A"		CLASS "B"	
BAR SIZE / CASE	TOP BARS	OTHER BARS	TOP BARS	OTHER BARS	TOP BARS	OTHER BARS	TOP BARS	OTHER BARS
#3	1'-10"	1'-5"	2'-4"	1'-10"	1'-7"	1'-3"	2'-1"	1'-7"
#4	2'-5"	1'-10"	3'-1"	2'-5"	2'-1"	1'-7"	2'-9"	2'-1"
#5	3'-0"	2'-4"	3'-11"	3'-0"	2'-7"	2'-0"	3'-5"	2'-7"
#6	3'-7"	2'-9"	4'-8"	3'-7"	3'-1"	2'-5"	4'-1"	3'-1"
#7	5'-3"	4'-0"	6'-9"	5'-3"	4'-6"	3'-6"	5'-11"	4'-6"
#8	6'-0"	4'-7"	7'-9"	6'-0"	5'-2"	4'-0"	6'-9"	5'-2"
#9	6'-9"	5'-2"	8'-9"	6'-9"	5'-10"	4'-6"	7'-7"	5'-10"
#10	7'-7"	5'-10"	9'-10"	7'-7"	6'-7"	5'-1"	8'-6"	6'-7"
#11	8'-5"	6'-6"	10'-11"	8'-5"	7'-3"	5'-7"	9'-5"	7'-3"

NOTES:

1. UNLESS INDICATED OTHERWISE, USE THE CLASS "B" LAP SPLICE LENGTHS, MULTIPLIED BY THE APPLICABLE FACTOR(S) LISTED BELOW.
2. INCREASE THE LAP SPLICE OR DEVELOPMENT LENGTH BY 50% FOR ANY OF THE FOLLOWING CONDITIONS:
   A. THE BAR COVER IS LESS THAN OR EQUAL TO THE BAR DIAMETER.
   B. WHERE STIRRUPS OR TIES ARE SHOWN IN THE DRAWINGS THROUGHOUT LAP SPLICE OR DEVELOPMENT LENGTH AND THE CLEAR SPACING OF BARS PER ⓐ ABOVE IS LESS THAN 1 BAR DIAMETER.
   C. WHERE STIRRUPS OR TIES ARE NOT SHOWN THROUGHOUT LAP SPLICE OR DEVELOPMENT LENGTH AND THE CLEAR SPACING OF BARS PER ⓐ ABOVE IS LESS THAN 2 BAR DIAMETERS.
3. A CLASS "A" SPLICE MAY BE USED ONLY WHERE NOTED ON THE DRAWINGS. WHERE DEVELOPMENT LENGTH (Ld) IS REQUIRED OR CALLED OUT ON THE DRAWINGS, USE CLASS "A" LAP SPLICE LENGTH.
4. TOP BARS ARE HORIZONTAL BARS WITH MORE THAN 12 INCHES OF CONCRETE CAST BELOW THE BARS.
5. LAP SPLICE LENGTHS IN TABLE ARE FOR NORMAL WEIGHT CONCRETE. WHERE LIGHTWEIGHT AGGREGATE CONCRETE IS USED, INCREASE LAP SPLICE LENGTH BY 33%.
6. SPLICES OF HORIZONTAL REINFORCEMENT IN WALLS SHALL BE STAGGERED.
7. SPLICES OF HORIZONTAL REINFORCEMENT IN WALLS CONTAINING TWO CURTAINS OF REINFORCEMENT SHALL NOT OCCUR IN THE SAME LOCATION.

1 REBAR OFFSET, LAP SPLICE, AND BUTT SPLICE

NOT TO SCALE

PICO BRANCH LIBRARY

Virginia Avenue Park
Santa Monica, CA 90404

PROJECT

KoningEizenberg Architecture
1454 25th St, Santa Monica, CA 90404
310.828.6131 info@kearch.com
310.828.0719 fax www.kearch.com

ARCHITECT'S PROJECT NO.
1001

ARCHITECT

All designs, ideas, arrangements and plans indicated by these drawings are the property and copyright of the Architect and shall neither be used on any other work nor be disclosed to any other person for any use whatsoever without written permission.

Koning Eizenberg Architecture and/or its principals and employees waives any and all liability or responsibility for problems that may occur when these plans, drawings, specifications, and/or designs are followed without the professional's guidance with ambiguities, or conflicts which are alleged.

Thornton Tomasetti
Thornton Tomasetti, Inc.
6080 Center Drive, Suite 260
Los Angeles CA 90045-9204
T 310.665.0010 F 310.665.0101

CONSULTANT

City of Santa Monica Architecture Services
1437 4TH STREET, SUITE 300
SANTA MONICA, CA 90401
TEL. (310) 458-2205
FAX. (310) 399-1541
architecture@smgov.net

DATE : 20
SUBMITTED BY :

DATE : 20
APPROVED BY :
Miriam Mulder,
Architecture Services Manager
CITY OF SANTA MONICA
DEPARTMENT OF PUBLIC WORKS

REVIEWED BY : DATE : 20

REVIEWED BY : DATE : 20

REVIEWED BY : DATE : 20

CITY CLIENT

NO.	DATE	BY	DESCRIPTION

REVISIONS

ISSUE
65% CONSTRUCTION DOCUMENTS / BID SET

DATE
01/23/2012

DRAWING NO. **6693**

SHEET OF SHEETS

SHEET TITLE
TYPICAL CONCRETE DETAILS

SHEET NO.
S3.01

File Path: C:\Scratch\T-S 10502-PICO BRANCH LIBRARY-CENTRAL_metr.rvt
ON: 1/23/2012 12:12:24 PM

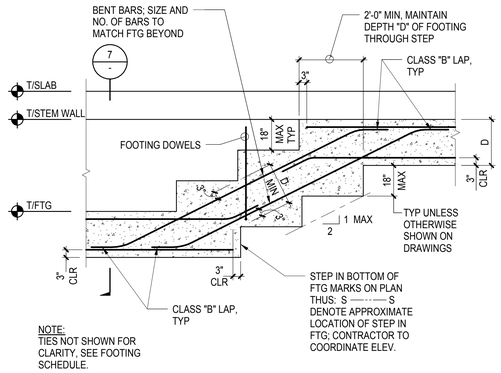

NOTE:
TIES NOT SHOWN FOR CLARITY, SEE FOOTING SCHEDULE.

6 STEPS IN CONTINUOUS FOOTING
1/2" = 1'-0"

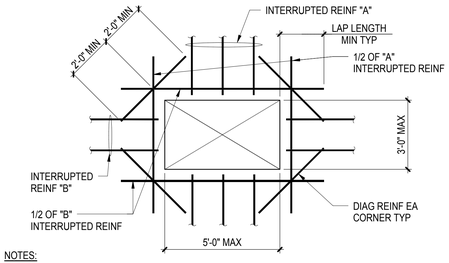

NOTES:

1. OPENING SIZE, LOCATION, AND REINFORCING SHALL BE SUBMITTED AS PART OF THE REINFORCING SHOP DRAWING SUBMITTAL FOR REVIEW AND APPROVAL.
2. AT EACH SIDE OF THE OPENING, ADD NOT LESS THAN ONE-HALF THE AREA OF REINFORCING THAT IS INTERRUPTED BY THE OPENING. WHERE THE BAR LENGTH PAST THE OPENING IS INTERRUPTED BY AN EDGE OF SLAB, PROVIDE A STANDARD HOOK AT THE DISCONTINUOUS END.
3. WHERE THE DIAGONAL LENGTH IS INTERRUPTED BY AN EDGE OF SLAB, PROVIDE A STANDARD HOOK.
4. NOT REQUIRED AT COLUMN LOCATIONS.

SCHEDULE OF DIAGONAL REINFORCING		
SLAB THICKNESS	DIAGONAL REINFEA CORNER	COMMENT
4" TO 5"	1-#4	CENTERED IN SLAB
>5" TO 8"	1-#5	CENTERED IN SLAB
>8" TO 12"	1-#5	T&B IN SLAB

3 OPENING IN SLAB-ON-GRADE
1" = 1'-0"

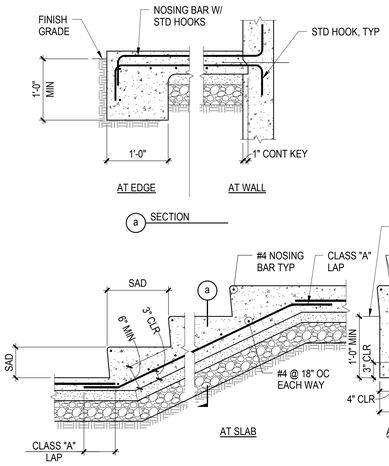

5 STAIR-ON-GRADE
1" = 1'-0"

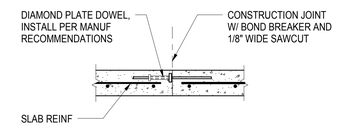

CONSTRUCTION JOINT, SLAB-ON-GRADE ≥ 5" THICK

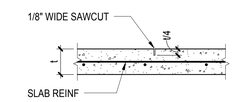

CONTROL JOINT

EITHER CONTROL OR CONSTRUCTION JOINTS SHALL BE LOCATED NO FURTHER THAN 36 x SLAB THICKNESS UNLESS A SMALLER SPACING IS INDICATED ON DRAWINGS. ASPECT RATIO OF ENCLOSED AREA SHALL NOT EXCEED 1.5. SUBMIT LAYOUT FOR APPROVAL. LOCATE JOINTS ON COLUMN LINES AND UNDER PARTITIONS WHEREVER POSSIBLE. MAXIMUM SLAB AREA CONTROLLED BY JOINTING IS 400 SQ FT. SAWCUTS SHALL BE MADE AS SOON AS POSSIBLE AFTER SLAB FINISHING AS MAY SAFELY BE DONE WITHOUT DISLOGGING AGGREGATE OR BREAKING EDGES. FILL SAWCUT JOINT WITH SEALANT AFTER SLAB HAS CURED.

JOINT LAYOUT

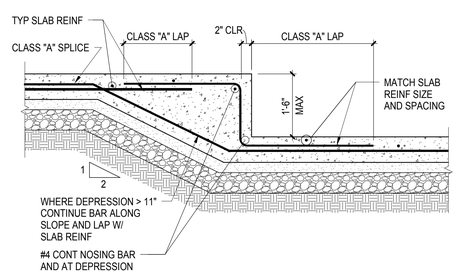

4 SLAB-ON-GRADE DEPRESSION
1" = 1'-0"

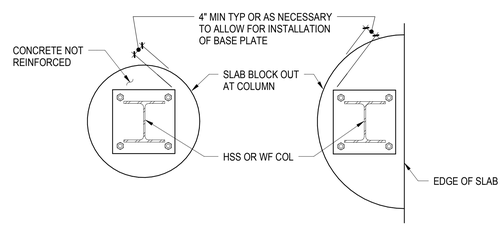

PLAN - SLAB BLOCKOUT AT COLUMN

PLAN - SLAB BLOCKOUT AT EDGE COLUMN

SLAB-ON-GRADE CONSTRUCTION AND CONTROL JOINTS
1 1" = 1'-0"

PICO BRANCH LIBRARY
Virginia Avenue Park
Santa Monica, CA 90404

PROJECT

KoningEizenberg Architecture
1454 25th St, Santa Monica, CA 90404
310.828.6131 info@kearch.com
310.828.0719 fax www.kearch.com

ARCHITECT'S PROJECT NO.
1001

ARCHITECT

All designs, ideas, arrangements and plans indicated by these drawings are the property and copyright of the Architect and shall neither be used on any other work nor be disclosed to any other person for any use whatsoever without written permission.

Koning Eizenberg Architecture and/or its principals and employees waives any and all liability or responsibility for problems that may occur when these plans, drawings, specifications, and/or designs are followed without the professional's guidance with ambiguities, or conflicts which are alleged.

Thornton Tomasetti
Thornton Tomasetti, Inc.
6080 Center Drive, Suite 260
Los Angeles CA 90045-9204
T 310.665.0010 F 310.665.0101

CONSULTANT

City of Santa Monica Architecture Services
1437 4TH STREET, SUITE 300
SANTA MONICA, CA 90401
TEL. (310) 458-2205
FAX. (310) 399-1541
architecture@smgov.net

SUBMITTED BY : DATE : 20

APPROVED BY : Miriam Mulder, Architecture Services Manager DATE : 20

CITY OF SANTA MONICA
DEPARTMENT OF PUBLIC WORKS

REVIEWED BY : DATE : 20

REVIEWED BY : DATE : 20

REVIEWED BY : DATE : 20

CITY CLIENT

NO.	DATE	BY	DESCRIPTION

REVISIONS

ISSUE
65% CONSTRUCTION DOCUMENTS / BID SET

DATE
01/23/2012

DRAWING NO. 6693

SHEET OF SHEETS

SHEET TITLE
TYPICAL CONCRETE DETAILS

SHEET NO.
S3.02

File Path: C:\Scratch\TT S-10502-PICO BRANCH LIBRARY-CENTRAL_lwear.rvt
On: 1/23/2012 12:12:26 PM

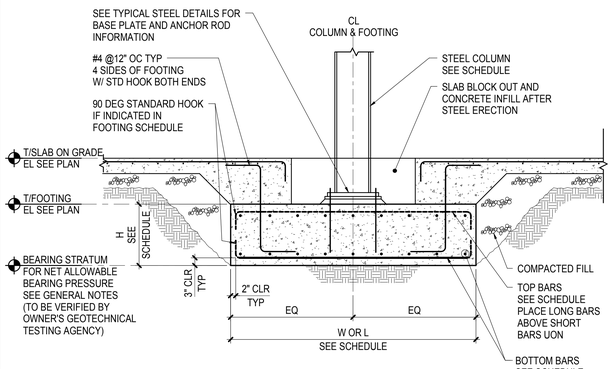

12 COLUMN FOOTING
1/2" = 1'-0"

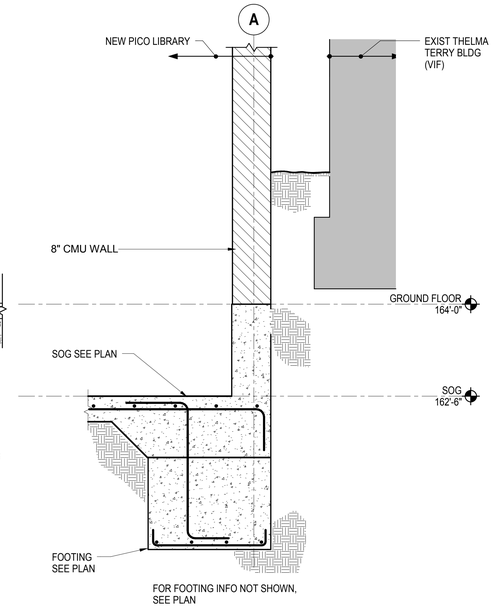

9 TYP FOUNDATION SECTION AT EXISTING BUILDING
1" = 1'-0"

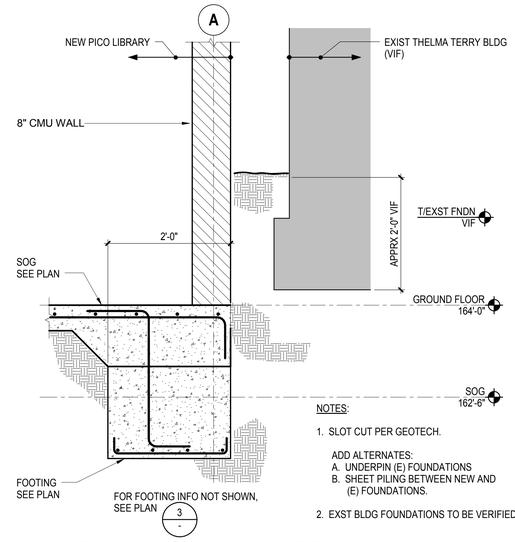

NOTES:

1. SLOT CUT PER GEOTECH.

ADD ALTERNATES:
A. UNDERPIN (E) FOUNDATIONS
B. SHEET PILING BETWEEN NEW AND (E) FOUNDATIONS.

2. EXST BLDG FOUNDATIONS TO BE VERIFIED IN FIELD.

6 TYP FOUNDATION SECTION AT EXISTING BUILDING
1" = 1'-0"

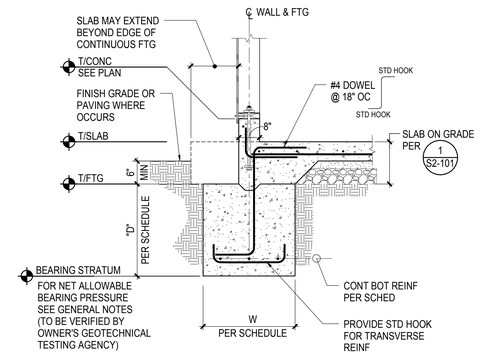

3 EXTERIOR CONTINUOUS FOOTING
3/4" = 1'-0"

ISOLATED FOOTING SCHEDULE						f'c =SEE GENERAL NOTES
MARK	SIZE			REINFORCEMENT		REMARKS
	L	W	H	BOTTOM BARS	TOP BARS	
F1	3'-0"	3'-0"	1'-6"	4-#4 EA WAY	4-#4 EA WAY	
F2	4'-0"	4'-0"	2'-0"	5-#5 EA WAY	5-#5 EA WAY	
F3	5'-0"	5'-0"	2'-0"	6-#5 EA WAY	6-#5 EA WAY	
F4	3'-0"	5'-0"	1'-6"	4-#5 LONG 6-#5 SHORT	4-#5 LONG 6-#5 SHORT	

NOTE:

1. REINFORCEMENT SHALL NOT BE SPLICED WITHOUT WRITTEN AUTHORIZATION OF STRUCTURAL ENGINEER.

11 ISOLATED FOOTING SCHEDULE
12" = 1'-0"

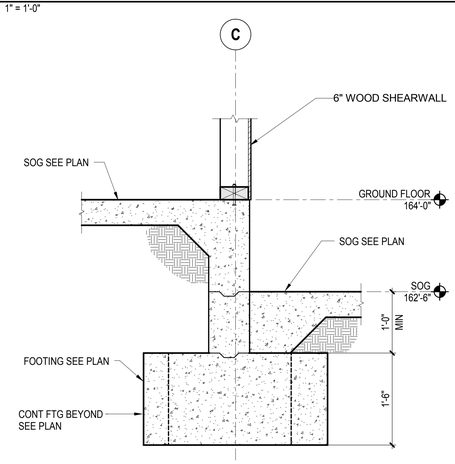

5 FOUNDATION SECTION AT INTERIOR WALL
1" = 1'-0"

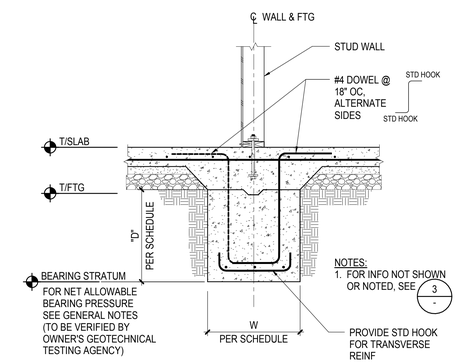

2 INTERIOR CONTINUOUS FOOTING
3/4" = 1'-0"

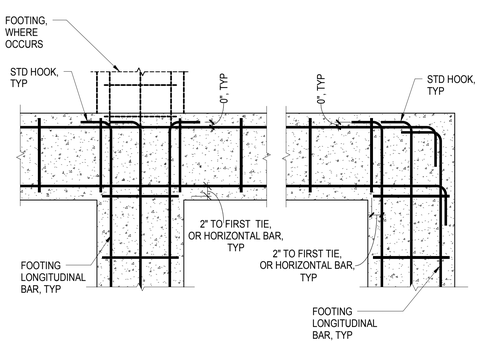

10 CONTINUOUS FOOTING INTERSECTIONS
1" = 1'-0"

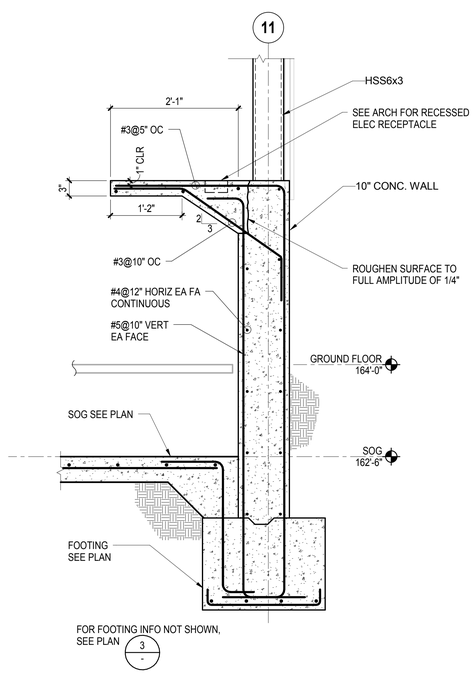

7 TYP FOUNDATION SECTION AT EAST GLAZING
1" = 1'-0"

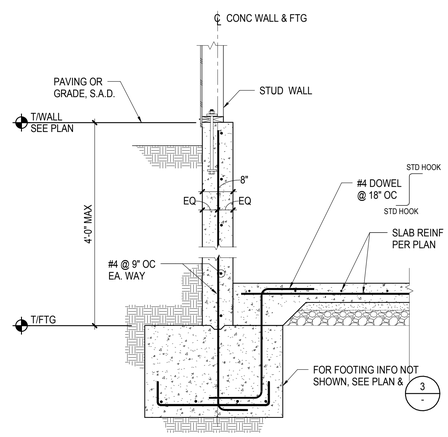

4 EXTERIOR WALL FOOTING AT LOW GRADE
3/4" = 1'-0"

CONTINUOUS FOOTING SCHEDULE					
MARK	W	D	LONG BARS	TRANSVERSE BARS	DETAIL
CF-1	2'-0"	1'-6"	3-#5	#4@12 OC, UON	3 -
CF-2	2'-0"	2'-0"	3-#5	#5@12 OC, UON	3 -
CF-3	3'-0"	2'-0"	4-#5	#6@12 OC, UON	3 -

NOTES:

1. WHERE CONTINOUS FOOTING INTERSECTS COLUMN FOOTING, EXTEND LONGITUDINAL REINFORCING THRU COLUMN FOOTING, SEE 12 -.
2. WHERE CONTINUOS FOOTING TERMINATES AT COLUMN FOOTING, EXTEND LOGITUDINAL REINF Ldn MIN INTO PER PENDICULAR FOOTING, UON.
3. STEP CONTINUOUS FOOTINGS WHEN TOP OF INTERSECTING FOOTINGS ARE DIFFERENT ELEVATIONS, SEE PLAN AND 6 S3.02.
4. FOR INTERSECTING FOOTING REINFORCEMENT, SEE 10 -.

1 CONTINUOUS FOOTING SCHEDULE
NOT TO SCALE

PICO BRANCH LIBRARY
Virginia Avenue Park
Santa Monica, CA 90404

PROJECT

KoningEizenberg Architecture
1454 29th St, Santa Monica, CA 90404
310.828.6131 info@kearch.com
310.828.0719 fax www.kearch.com

ARCHITECT'S PROJECT NO.
1001

ARCHITECT

All designs, ideas, arrangements and plans indicated by these drawings are the property and copyright of the Architect and shall neither be used on any other work nor be disclosed to any other person for any use whatsoever without written permission.

Koning Eizenberg Architecture and/or its principals and employees waives any and all liability or responsibility for problems that may occur when these plans, drawings, specifications, and/or designs are followed without the professional's guidance with ambiguities, or conflicts which are alleged.

Thornton Tomasetti
Thornton Tomasetti, Inc.
6080 Center Drive, Suite 260
Los Angeles CA 90045-9204
T 310.665.0010 F 310.665.0101

CONSULTANT

City of Santa Monica Architecture Services
1437 4TH STREET, SUITE 300
SANTA MONICA, CA 90401
TEL. (310) 458-2205
FAX. (310) 399-1541
architecture@smgov.net

SUBMITTED BY : DATE : 20

APPROVED BY : DATE : 20
Miriam Mulder,
Architecture Services Manager
CITY OF SANTA MONICA
DEPARTMENT OF PUBLIC WORKS

REVIEWED BY : DATE : 20

REVIEWED BY : DATE : 20

REVIEWED BY : DATE : 20

CITY CLIENT

NO.	DATE	BY	DESCRIPTION

REVISIONS

ISSUE
65% CONSTRUCTION DOCUMENTS / BID SET

DATE
01/23/2012

DRAWING NO. **6693**

SHEET OF SHEETS

SHEET TITLE
FOUNDATION SECTIONS AND DETAILS

SHEET NO.
S3.03

File Path: C:\Scratch\TT-S10502-PICO BRANCH LIBRARY-CENTRAL_3wer.rvt
ON: 1/23/2012 12:12:29 PM

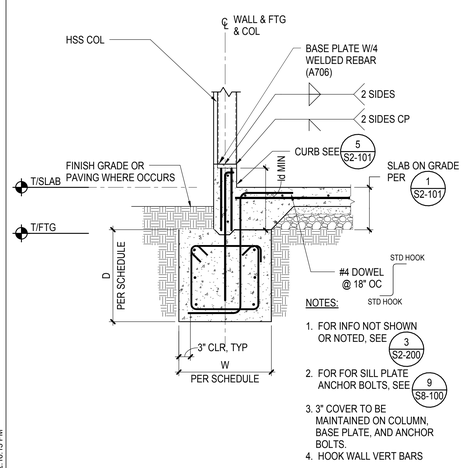

NOTES:

1. FOR INFO NOT SHOWN OR NOTED, SEE 3 S2-200
2. FOR FOR SILL PLATE ANCHOR BOLTS, SEE 9 S8-100
3. 3" COVER TO BE MAINTAINED ON COLUMN, BASE PLATE, AND ANCHOR BOLTS.
4. HOOK WALL VERT BARS

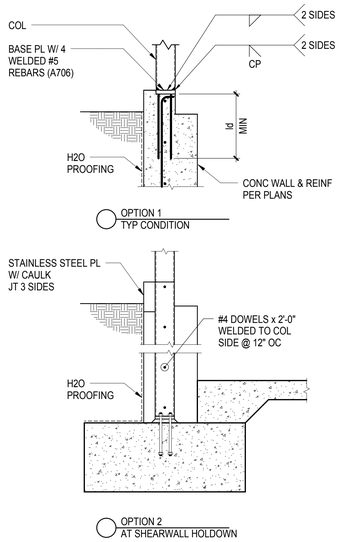

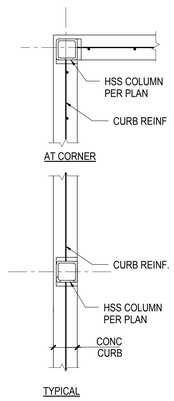

a PLAN AT HSS COLUMN

10 EXTERIOR CONTINUOUS FOOTING WITH HSS COLUMN

3/4" = 1'-0"

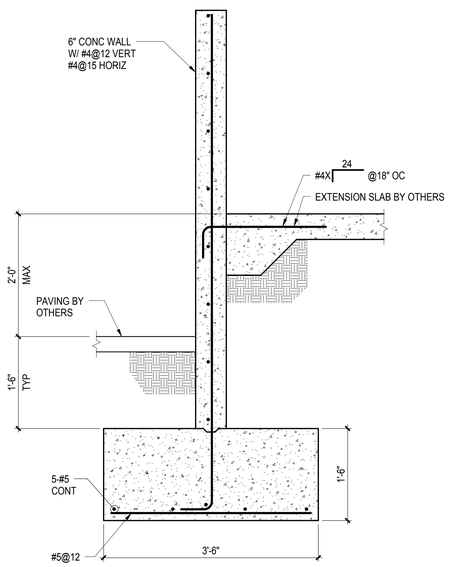

1 SITE WALL AT ENTRY

1" = 1'-0"

PICO BRANCH LIBRARY

Virginia Avenue Park
Santa Monica, CA 90404

PROJECT

KoningEizenberg Architecture
1454 25th St, Santa Monica, CA 90404

310.828.6131 info@kearch.com
310.828.0719 fax www.kearch.com

ARCHITECT'S PROJECT NO.
1001

ARCHITECT

All designs, ideas, arrangements and plans indicated by these drawings are the property and copyright of the Architect and shall neither be used on any other work nor be disclosed to any other person for any use whatsoever without written permission.

Koning Eizenberg Architecture and/or its principals and employees waives any and all liability or responsibility for problems that may occur when these plans, drawings, specifications, and/or designs are followed without the professional's guidance with ambiguities, or conflicts which are alleged.

Thornton Tomasetti
Thornton Tomasetti, Inc.
6080 Center Drive, Suite 260
Los Angeles CA 90045-9204
T 310.665.0010 **F** 310.665.0101

CONSULTANT

City of Santa Monica
Architecture Services

1437 4TH STREET, SUITE 300
SANTA MONICA, CA 90401
TEL. (310) 458-2205
FAX. (310) 399-1541
architecture@smgov.net

SUBMITTED BY : DATE : 20

APPROVED BY : DATE : 20
Miriam Mulder,
Architecture Services Manager
CITY OF SANTA MONICA
DEPARTMENT OF PUBLIC WORKS

REVIEWED BY : DATE : 20

REVIEWED BY : DATE : 20

REVIEWED BY : DATE : 20

CITY CLIENT

NO.	DATE	BY	DESCRIPTION

REVISIONS

ISSUE
65% CONSTRUCTION DOCUMENTS / BID SET

DATE
01/23/2012

DRAWING NO. **6693**

SHEET OF SHEETS

SHEET TITLE
FOUNDATION DETAILS

SHEET NO.
S3.04

File Path: C:\Scratch\TT-S-10502-PICO BRANCH LIBRARY-CENTRAL_lwser.rvt
On: 1/23/2012 12:16:13 PM

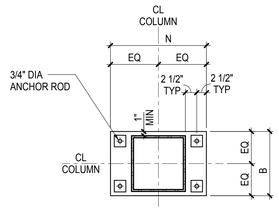

RECTANGULAR BASE PLATE AT EXTERIOR LOCATIONS PLAN

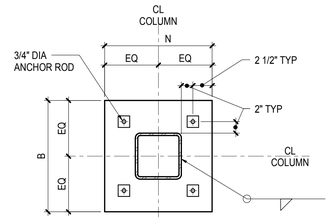

SQUARE BASEPLATE AT INTERIOR LOCATIONS PLAN

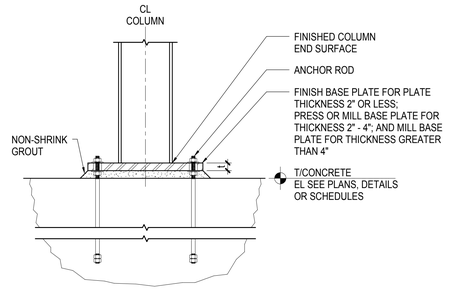

ELEVATION

NOTES:

1. SEE COLUMN SCHEDULE FOR BASE PLATE SIZE, ORIENTATION AND THICKNESS.
2. BASE PLATE THICKNESS SHOWN IS A MIN. DIMENSION AFTER ALL MILLING IS COMPLETED.
3. COLUMN STABILITY DURING ERECTION IS RESPONSIBILITY OF CONTRACTOR
4. SEE ANCHOR ROD SCHEDULE AND TYPICAL ANCHOR ROD DETAIL FOR ADDITIONAL INFORMATION.
5. CONTRACTOR'S OPTION TO FIELD WELD COLUMNS TO BASEPLATES FOR HEAVY BASEPLATES.

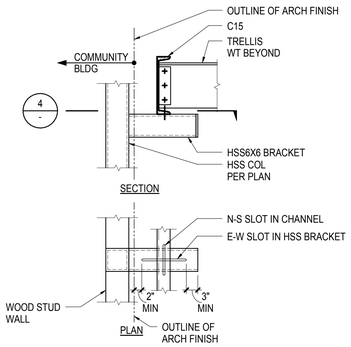

2 WEST TRELLIS BRACKET DETAIL

3/4" = 1'-0"

1 TYPICAL BASEPLATE DETAILS

3/4" = 1'-0"

PICO BRANCH LIBRARY

Virginia Avenue Park
Santa Monica, CA 90404

PROJECT

KoningEizenberg Architecture
1454 25th St, Santa Monica, CA 90404

310.828.6131 info@kearch.com
310.828.0719 fax www.kearch.com

ARCHITECT'S PROJECT NO.
1001

ARCHITECT

All designs, ideas, arrangements and plans indicated by these drawings are the property and copyright of the Architect and shall neither be used on any other work nor be disclosed to any other person for any use whatsoever without written permission.

Koning Eizenberg Architecture and/or its principals and employees waives any and all liability or responsibility for problems that may occur when these plans, drawings, specifications, and/or designs are followed without the professional's guidance with ambiguities, or conflicts which are alleged.

Thornton Tomasetti
Thornton Tomasetti, Inc.
6080 Center Drive, Suite 260
Los Angeles CA 90045-9204
T 310.665.0010 **F** 310.665.0101

CONSULTANT

City of Santa Monica
Architecture Services

1437 4TH STREET, SUITE 300
SANTA MONICA, CA 90401
TEL. (310) 458-2205
FAX. (310) 399-1541
architecture@smgov.net

SUBMITTED BY : DATE : 20

APPROVED BY : DATE : 20
Miriam Mulder,
Architecture Services Manager
CITY OF SANTA MONICA
DEPARTMENT OF PUBLIC WORKS

REVIEWED BY : DATE : 20

REVIEWED BY : DATE : 20

REVIEWED BY : DATE : 20

CITY CLIENT

NO.	DATE	BY	DESCRIPTION

REVISIONS

ISSUE
65% CONSTRUCTION DOCUMENTS / BID SET

DATE
01/23/2012

DRAWING NO. **6693**

SHEET OF SHEETS

SHEET TITLE
TYPICAL STEEL COLUMN DETAILS

SHEET NO.
S5.01

File Path: C:\Scratch\TT-S-10502-PICO BRANCH LIBRARY-CENTRAL_lwser.rvt
ON: 1/23/2012 12:12:32 PM

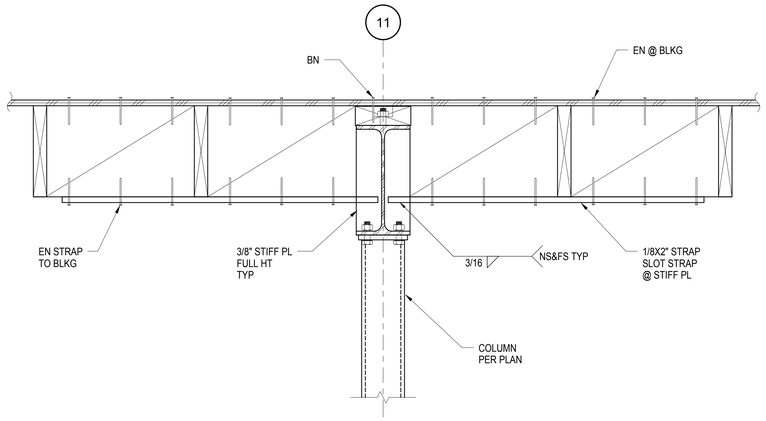

12 BRACE DETAIL AND COLUMN
1 1/2" = 1'-0"

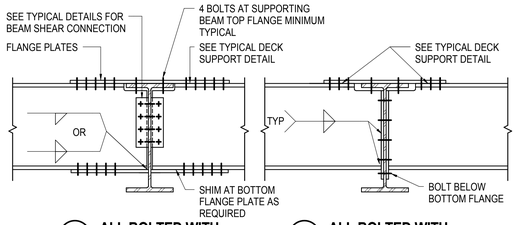

A ALL BOLTED WITH FLANGE PLATE

B ALL BOLTED WITH END PLATE

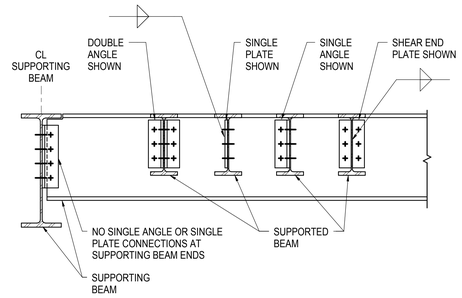

NOTES:

1. SUPPORTED BEAMS PRIMARILY SUPPORT DISTRIBUTED LOADS FROM SLABS OR DECKING.
2. SUPPORTING BEAMS SUPPORT SIGNIFICANT POINT LOADS FROM ONE OR MORE SUPPORTED BEAMS OR FROM COLUMNS BEING TRANSFERRED. SUPPORTING BEAMS MAY BE SUPPORTED BY COLUMNS OR BY OTHER SUPPORTING BEAMS.
3. FOR AISC SIMPLE SHEAR CONNECTIONS AT SUPPORTED BEAM ENDS, DOUBLE ANGLE, SINGLE PLATE, SINGLE ANGLE, OR SHEAR END PLATE MAY BE USED UON.
4. WELDED/BOLTED OR BOLTED/BOLTED CONNECTIONS PER AISC ARE PERMITTED.

3 TYPICAL BEAM TO BEAM SHEAR CONNECTION (4 TYPES)
3/4" = 1'-0"

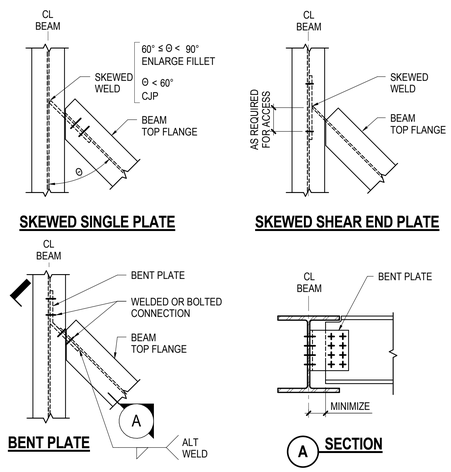

SKEWED SINGLE PLATE

SKEWED SHEAR END PLATE

BENT PLATE

A SECTION

8 TYPICAL SKEWED BEAM SHEAR CONNECTION
3/4" = 1'-0"

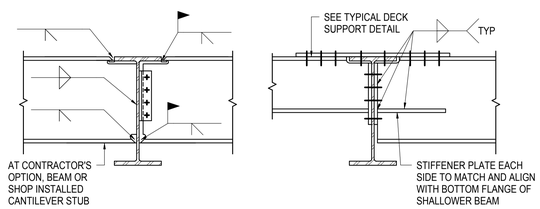

C ALL WELDED

D VARIED DEPTH / BOLTED WITH END PLATE

NOTES:

1. ALL BOLTED MOMENT AND AXIAL CONNECTIONS AT A MINIMUM SHALL HAVE PRETENSIONED BOLTS IN STANDARD HOLES AT FLANGES AND WEBS UON.
2. BOLTED MOMENT CONNECTIONS AT CANTILEVERS AND BACKSPANS SHALL USE SLIP CRITICAL BOLTS.

5 TYPICAL BEAM TO BEAM MOMENT CONNECTION
3/4" = 1'-0"

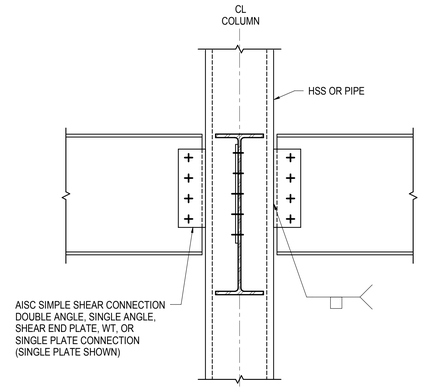

2 TYPICAL BEAM TO HSS/PIPE COLUMN SHEAR CONNECTION
1" = 1'-0"

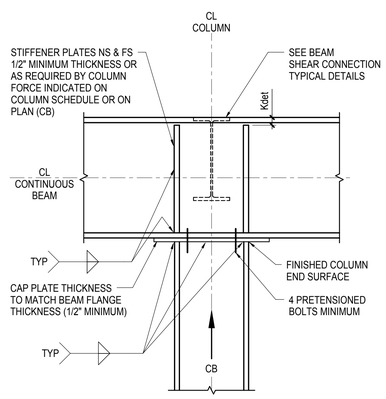

A COLUMN WEB PARALLEL TO BEAM WEB

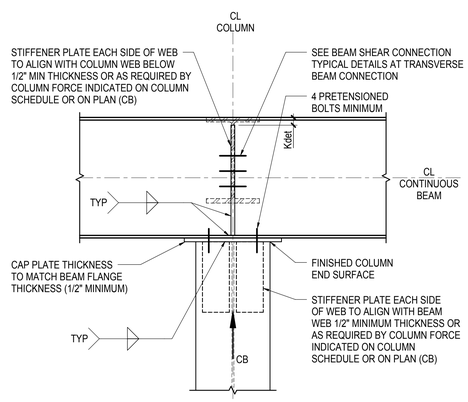

B COLUMN WEB PERPENDICULAR TO BEAM WEB

7 TYPICAL BEAM BEARING ON COLUMN (AXIAL ONLY)
1" = 1'-0"

1 TYPICAL BEAM CONNECTION SCHEDULE
3/4" = 1'-0"

File Path: C:\Scratch\T.S.10502-PICO BRANCH LIBRARY-CENTRAL_lwser.rvt
ON: 1/23/2012 12:12:34 PM

PICO BRANCH LIBRARY
Virginia Avenue Park
Santa Monica, CA 90404

PROJECT

KoningEizenberg Architecture
1454 25th St, Santa Monica, CA 90404
310.828.6131 info@kearch.com
310.828.0719 fax www.kearch.com

ARCHITECT'S PROJECT NO.
1001

ARCHITECT

All designs, ideas, arrangements and plans indicated by these drawings are the property and copyright of the Architect and shall neither be used on any other work nor be disclosed to any other person for any use whatsoever without written permission.

Koning Eizenberg Architecture and/or its principals and employees waives any and all liability or responsibility for problems that may occur when these plans, drawings, specifications, and/or designs are followed without the professional's guidance with ambiguities, or conflicts which are alleged.

Thornton Tomasetti
Thornton Tomasetti, Inc.
6080 Center Drive, Suite 260
Los Angeles CA 90045-9204
T 310.665.0010 F 310.665.0101

CONSULTANT

City of Santa Monica
Architecture Services
1437 4TH STREET, SUITE 300
SANTA MONICA, CA 90401
TEL. (310) 458-2205
FAX. (310) 399-1541
architecture@smgov.net

DATE : 20
SUBMITTED BY :

DATE : 20
APPROVED BY :
Miriam Mulder,
Architecture Services Manager

CITY OF SANTA MONICA
DEPARTMENT OF PUBLIC WORKS

REVIEWED BY : DATE : 20

REVIEWED BY : DATE : 20

REVIEWED BY : DATE : 20

CITY CLIENT

NO.	DATE	BY	DESCRIPTION

REVISIONS

ISSUE
65% CONSTRUCTION DOCUMENTS / BID SET

DATE
01/23/2012

DRAWING NO. **6693**

SHEET OF SHEETS

SHEET TITLE
TYPICAL STEEL BEAM DETAILS

SHEET NO.
S5.02

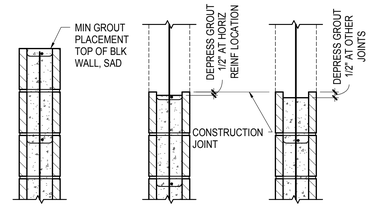

WALL SECTION VIEW

BAR SIZE	LAP SPLICE LENGTH (f'm = 2500 PSI) FOR K ≥ 2db	FOR K ≥ 3db	FOR K ≥ 4db
#3	N.A.	1'-8"	1'-3"
#4	3'-0"	2'-2"	1'-8"
#5	3'-9"	2'-9"	2'-1"
#6	4'-6"	4'-3"	3'-3"
#7	5'-3"	5'-0"	3'-9"
#8	6'-0"	6'-0"	4'-11"
#9	6'-10"	6'-10"	5'-6"

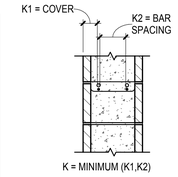

A "K" DIMENSION

NOTES:
1. "K" SHALL BE TAKE AS THE CMU COVER DIMENSION OR THE CLEAR SPACING BETWEEN ADJACENT BARS, WHICHEVER IS LESS. SEE DETAIL "A" ABOVE.
2. WHERE EPOXY-COATED REINFORCING IS USED, INCREASE LAP SPLICE LENGTH BY 50%.
3. SPLICES OF HORIZONTAL REINFORCEMENT IN WALLS SHALL BE STAGGERED.
4. SPLICES OF HORIZONTAL REINFORCEMENT IN WALLS CONTAINING TWO CURTAINS OF REINFORCEMENT SHALL NOT OCCUR IN THE SAME LOCATION.
5. "N.A." MEANS "NOT ALLOWABLE". INCREASE "K" FOR ALLOWABLE LAP SPLICE.

6 CMU WALL CONSTRUCTION JOINTS
1" = 1'-0"

REBAR OFFSET AND LAP SPLICE
3 CMU f'm = 2500 PSI
1" = 1'-0"

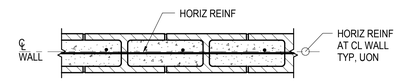

A 8" CMU WALL PLAN VIEW

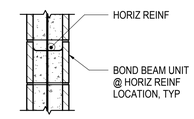

B SECTION VIEW

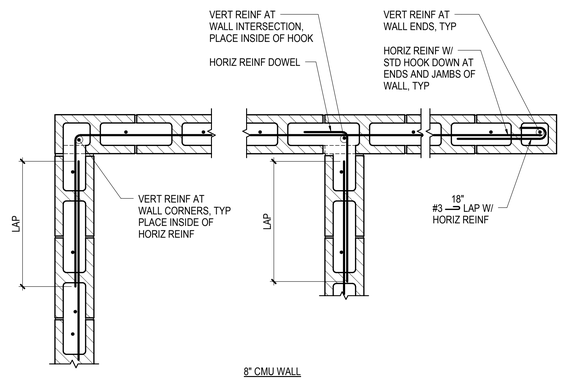

8" CMU WALL

REINFORCING SCHEDULE FOR CONCRETE MASONRY WALLS				
WALL TYPE	NOMINAL THICKNESS	VERTICAL REINF	HORIZONTAL REINF	NO. OF REINF CURTAINS
CMU1	8"	#5 @ 16"OC	#6 @ 8"OC	SINGLE
CMU2	8"	#5 @ 16"OC	#5 @ 16"OC	SINGLE

NOTES:

1. SEE PLANS FOR WALL TYPE LOCATIONS.
2. LAP SPLICE REINFORCING PER 3/-.
3. CMU SHALL BE RUNNING BOND AND FULLY GROUTED, UON.
4. USE DOUBLE OPEN END BLOCKS TO THE EXTENT PRACTICAL TYP, DO NOT PLACE CLOSED SIDES BACK TO BACK.
5. SEE STRUCTURAL GENERAL NOTES FOR MATERIAL SPECIFICATION,
6. FOR WALL CONSTRUCTION JOINTS, SEE DETAIL 6/-.
7. FOR WALL CORNERS & INTERSECTIONS, SEE DETAIL 5/-

5 CMU WALL CORNERS & INTERSECTIONS
1" = 1'-0"

2 CMU WALL REINFORCING SCHEDULE
1" = 1'-0"

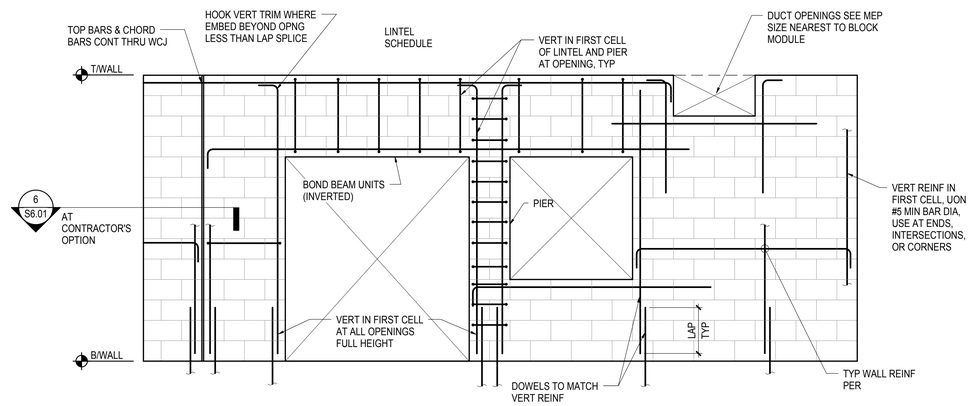

4 TYPICAL CMU WALL ELEVATION W/ OPENINGS
1" = 1'-0"

PICO BRANCH LIBRARY
Virginia Avenue Park
Santa Monica, CA 90404

PROJECT

KoningEizenberg Architecture
1454 25th St, Santa Monica, CA 90404
310.828.6131 info@kearch.com
310.828.0719 fax www.kearch.com

ARCHITECT'S PROJECT NO.
1001

ARCHITECT

All designs, ideas, arrangements and plans indicated by these drawings are the property and copyright of the Architect and shall neither be used on any other work nor be disclosed to any other person for any use whatsoever without written permission.

Koning Eizenberg Architecture and/or its principals and employees waives any and all liability or responsibility for problems that may occur when these plans, drawings, specifications, and/or designs are followed without the professional's guidance with ambiguities, or conflicts which are alleged.

Thornton Tomasetti
Thornton Tomasetti, Inc.
6080 Center Drive, Suite 260
Los Angeles CA 90045-9204
T 310.665.0010 F 310.665.0101

CONSULTANT

City of Santa Monica Architecture Services
1437 4TH STREET, SUITE 300
SANTA MONICA, CA 90401
TEL. (310) 458-2205
FAX. (310) 399-1541
architecture@smgov.net

DATE : _____ 20 __
SUBMITTED BY :

DATE : _____ 20 __
APPROVED BY :
Miriam Mulder,
Architecture Services Manager

CITY OF SANTA MONICA
DEPARTMENT OF PUBLIC WORKS

REVIEWED BY : DATE : _____ 20 __

REVIEWED BY : DATE : _____ 20 __

REVIEWED BY : DATE : _____ 20 __

CITY CLIENT

NO.	DATE	BY	DESCRIPTION

REVISIONS

ISSUE
65% CONSTRUCTION DOCUMENTS / BID SET

DATE
01/23/2012

DRAWING NO. **6693**

SHEET OF SHEETS

SHEET TITLE
TYPICAL CMU DETAILS

SHEET NO.
S6.01

File Path: C:\Scratch\TT-S 10502-PICO BRANCH LIBRARY-CENTRAL_Wetzel.rvt
DN: 1/23/2012 12:12:35 PM

	CONNECTION	NAILING [a,m]
1.	Joist to sill or girder, toenail	3-8d
2.	Bridging to joists, toenail each end	2-8d
3.	1" x 6" subfloor or less to each joist, face nail	2-8d
4.	Wider than 1" x 6" subfloor to each joist, face nail	3-8d
5.	2" subfloor to joist or girder, blind and face nail	2-16d
6.	Sole plate to joist or blocking, typical face nail Sole plate to joist or blocking, at braced wall panels	16d at 16" OC 3-16d per 16"
7.	Top plate to stud, end nail	2-16d
8.	Stud to sole plate	4-8d, toenail or 2-16d, end nail[s]
9.	Double studs, face nail	16d at 24"OC
10.	Double top plates, typical face nail	16d at 16"OC UON
11.	Blocking between joists or rafters to top plate, toenail	3-8d
12.	Rim joist to top plate, toenail	8d at 6" OC
13.	Top plates, laps and intersections, face nail	2-16d
14.	Continuous header, two pieces	16d at 16" OC along each side
15.	Ceiling joists to plate, toenail	3-8d
16.	Continuous header to stud, toenail	4-8d
17.	Ceiling joist, laps over partitions, face nail	3-16d[q]
18.	Ceiling joists to parallel rafters, face nail	3-16d[q]
19.	Joist or rafters at all bearings-toenails, each side	3-8d[r]
20.	1" brace to each stud and plate, face nail	2-8d
21.	1" x 8" sheathing or less to each bearing, face nail	3-8d
22.	Wider than 1" x 8" sheathing to each bearing, face nail	3-8d
23.	Built-up corner studs	16d at 24" OC
24.	Built-up girder and beams [5]	20d at 32" OC face nail at top & bottom & staggered 2-20d face nail at ends & at each splice
25.	2" planks	16d at each bearing
26.	Collar tie to rafter, face nail	3-10d
27.	Jack rafter to hip, toenail Jack rafter to hip, toenail	3-10d 2-16d
28.	Roof rafter to 2-by ridge beam, toenail Roof rafter to 2-by ridge beam, face nai	2-16d 2-16d
29.	Joist to band joist, face nail	3-16d
30.	Ledger strip, face nail	3-16d
31.	Wood structural panels and particleboard [b] Subfloor, roof and wall sheathing (to framing): 1/2" and less 19/32" - 3/4" 7/8" - 1" 1 1/8" - 1 1/4" Combination subfloor-underlayment (to framing): 3/4" and less 7/8" - 1" 1 1/8" - 1 1/4"	 6d[c] 8d[d] or 6d[e] 8d[e] 10d[d] or 8d[e] 6d[e] 8d[e] 10d[d] or 8d[e]
32.	Panel siding (to framing): 1/2" or less 5/8"	 6d[f] 8d[f]
33.	Fiberboard Sheathing: [g] 1/2" 25/32"	 No. 11 ga.[h] 6d[d] No. 16 ga.[i] No. 11 ga.[h] 8d[d] No. 16 ga.[i]
34.	Interior paneling 1/4" 3/8"	 4d[j] 6d[k]

FOOTNOTES:

a. Use common wire nails except where otherwise stated.

b. Nails spaced at 6 inches on center at edges. 12 inches at intermdiate supports except 6 inches at all supports where spans are 48 inches or more. For nailing of wood structural panel and particleboard diaphragms and shear walls, refer to Sections 2305. Nails for wall sheathing may be common, box or casing.

c. Common or deformed shank. (6d-2", 8d-2-1/2", 10d-3")

d. Common. (6d-2", 8d-2-1/2", 10d-3")

e. Deformed shank. (6d-2", 8d-2-1/2", 10d-3")

f. Corrosion-resistant siding or casing nails conforming to the requirements of Section 2304.9.5.

g. Fasteners spaced 3 inches on center at exterior edges and 6 inches on center at intermediate supports, when used as structural sheathing Spacing shall be 6 inches on center on the edges and 12" on center at intermediate supports for non structural applications.

h. Corrosion-resistant roofing nails with 7/16" inch-diameter head and 1-1/2"-inch length for 1/2"-inch sheathing and 1-3/4"-inch length for 25/32-inch sheathing conforming to the requirements of Section 2304.9.5.

i. Corrosion-resistant staples with nominal 7/16-inch crown and 1-1/8-inch length for 1/2-inch sheathing and 1-1/2-inch length for 25/32-inch sheathing conforming to the requirements of Section 2304.9.5.

j. Casing or finish nails spaced 6-inches on panel edges, 12 inches at intermediate supports.

k. Panel supports at 24". Casing or finish nails spaced 6" on panel edges, 12" at intermediate supports.

l. For roof sheathing applications, 8d nails are the minimum required for wood structural panels.

m. Staples shall have a minimum crown width of 7/16 inch.

n. For roof sheathing applications, fasteners spaced 4 inches on center at edges, 8 inches at intermediate supports.

o. Fasteners spaced 4 inches on center at edges, 8 inches at intermediate supports for subfloor and wall sheathing and 3 inches on center at edges, 6 inches at intermediate supports for roof sheathing.

p. Fasteners spaced 4 inches on center at edges, 8 inches at intermediate supports.

q. For roof slopes 3:12 or greater in which ceiling joists serve as a tie for roof rafters, minimum nailing per CBC Table 2308.10.4.1.

r. For roof slopes 3:12 or greater in which ceiling joists serve as a tie for roof rafters, minimum nailing must be adequate to withstand minimum wind uplift per CBC Table 2308.10.1.

s. At 3x sole, 2-20d end nails shall be used in place of 2-16d end nails.

10 NAILING SCHEDULE
NOT TO SCALE

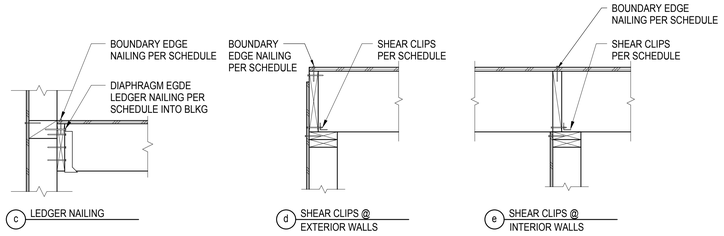

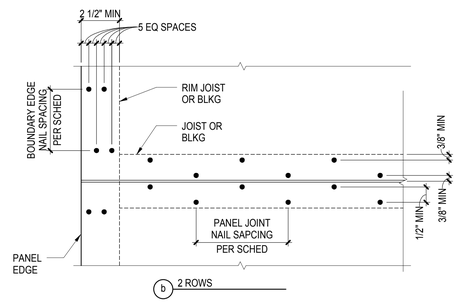

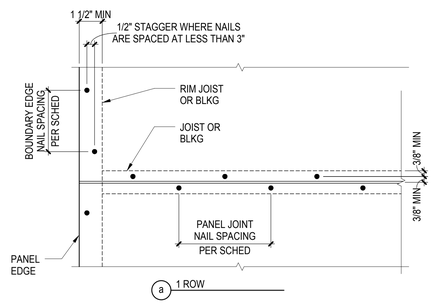

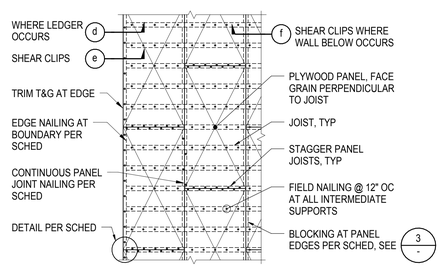

PLYWOOD NAILING SCHEDULE

MARK	NAIL SIZE	BOUNDARY EDGE NAIL SPACING	CONTINUOUS PANEL JOINT EDGE NAIL SPACING	STAGGERRED PANEL JOINT EDGE NAIL SPACING	DETAIL	BLOCKING REQUIRED	DIAPHRAGM EDGE LEDGER NAILING (OR SCREWS AS NOTED)	SHEAR CLIP SPACING (5)
1	10d				a			
2	8d							
3								

NOTES:

1. FOR 8d NAILS, PROVIDE 1 3/8" MINIMUM PENETRATION INTO FRAMING. FOR 10d NAILS, PROVIDE 1 1/2" MINIMUM PENETRATION INTO FRAMING.
2. MINIMUM PLYWOOD SHEATHING WIDTH IS 24".
3. SEE GENERAL NOTES FOR PLYWOOD GRADES AND THICKNESS.
4. 1 PSCA/PSCL OR EQUIVALENT AS REQD FOR ALIGNMENT AT ALL PANEL EDGES.
5. SHEAR CLIP SPACING AT SHEAR WALLS PER SHEAR WALL SCHEDULE.

7 DIAPHRAGM NAILING SCHEDULE
NOT TO SCALE

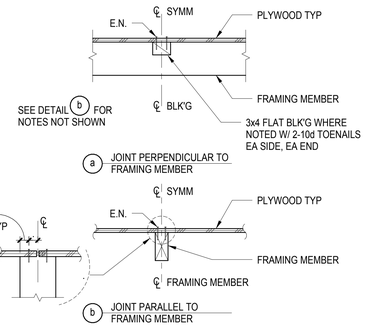

6 DIAPHRAGM PLYWOOD NAILING
NOT TO SCALE

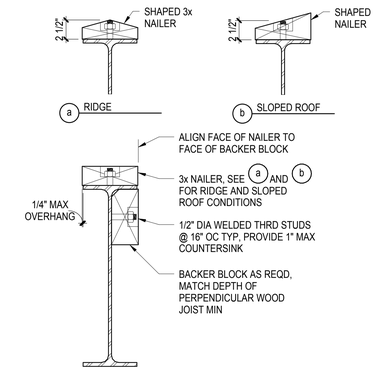

3 TYPICAL NAILER AND BACKER BLOCK
1 1/2" = 1'-0"

HANGER SCHEDULE

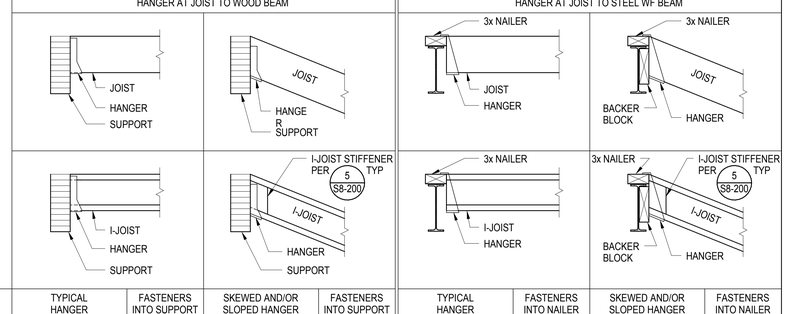

JOIST SIZE	TYPICAL HANGER	FASTENERS INTO SUPPORT	SKEWED AND/OR SLOPED HANGER	FASTENERS INTO SUPPORT	TYPICAL HANGER	FASTENERS INTO NAILER	SKEWED AND/OR SLOPED HANGER	FASTENERS INTO NAILER
2x4								
2x6								
2x8								
2x10								
2x12								

NOTES:

1. PROVIDE AND INSTALL NAILS INTO JOIST PER HANGER MANUFACTURER'S INSTRUCTIONS. FILL ALL HOLES TO ACHIEVE MAXIMUM VALUES AS SPECIFIED BY MFR.
2. TYPICAL HANGERS MAY BE USED UP TO 5° SKEW AND/OR 1/2":12 SLOPE. OTHERWISE PROVIDE SKEWED AND/OR SLOPED HANGERS.
3. SEE DETAIL 3 ON THIS SHEET FOR TYPICAL ATTACHMENT OF NAILERS AND BACKER BLOCK TO WIDE FLANGE BEAMS.

5 HANGER SCHEDULE
NOT TO SCALE

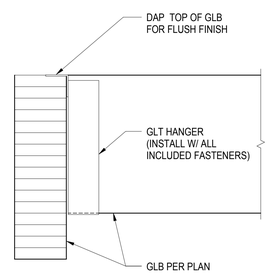

NOTE:1

1. INSTALL NAILS INTO GLB BEAMS PER HANGER MANUFACTURER'S INSTRUCTIONS.

4 HANGER FOR GLB TO GLB
1 1/2" = 1'-0"

PICO BRANCH LIBRARY
Virginia Avenue Park
Santa Monica, CA 90404

PROJECT

KoningEizenberg Architecture
1454 25th St, Santa Monica, CA 90404
310.828.6131 info@kearch.com
310.828.0719 fax www.kearch.com

ARCHITECT'S PROJECT NO.
1001

ARCHITECT

All designs, ideas, arrangements and plans indicated by these drawings are the property and copyright of the Architect and shall neither be used on any other work nor be disclosed to any other person for any use whatsoever without written permission.

Koning Eizenberg Architecture and/or its principals and employees waives any and all liability or responsibility for problems that may occur when these plans, drawings, specifications, and/or designs are followed without the professional's guidance with ambiguities, or conflicts which are alleged.

Thornton Tomasetti
Thornton Tomasetti, Inc.
6080 Center Drive, Suite 260
Los Angeles CA 90045-9204
T 310.665.0010 F 310.665.0101

CONSULTANT

City of Santa Monica Architecture Services
1437 4TH STREET, SUITE 300
SANTA MONICA, CA 90401
TEL. (310) 458-2205
FAX. (310) 399-1541
architecture@smgov.net

SUBMITTED BY: DATE: 20

APPROVED BY: Miriam Mulder, Architecture Services Manager DATE: 20

CITY OF SANTA MONICA
DEPARTMENT OF PUBLIC WORKS

REVIEWED BY: DATE: 20

REVIEWED BY: DATE: 20

REVIEWED BY: DATE: 20

CITY CLIENT

NO.	DATE	BY	DESCRIPTION

REVISIONS

ISSUE
65% CONSTRUCTION DOCUMENTS / BID SET

DATE
01/23/2012

DRAWING NO. 6693

SHEET OF SHEETS

SHEET TITLE
TYPICAL WOOD DETAILS AND SCHEDULES

SHEET NO.
S7.01

File Path: C:\Scratch\TT-S10502-PICO BRANCH LIBRARY-CENTRAL_tweir.rvt
ON: 1/23/2012 12:12:37 PM

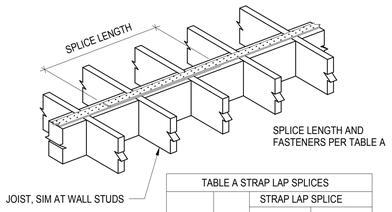

TABLE A STRAP LAP SPLICES			
MODEL No.	GAGE	STRAP LAP SPLICE	
		MINIMUM FASTENERS PER SPLICE	MINIMUM SPLICE LENGTH
CMST12	12	25-16d	22"
		30-10d	27"
CMST14	14	18-16d	16"
		21-10d	19"
CMSTC16	16	13-16d	11"
		15-10d	12"

NOTES:
1. NO STRAP MODIFICATION IS ALLOWED AND SPLICE MUST MEET BOTH MINIMUM NUMBER OF FASTENERS AND THE MINIMUM SPLICE LENGTH.
2. ALTERNATE PER DETAIL 9/- MAY BE USED AT CONTRACTOR'S OPTION.

12 STRAP SPLICE
NOT TO SCALE

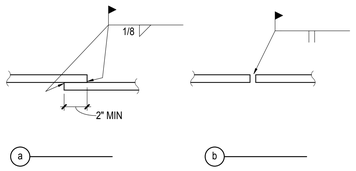

NOTE:
EITHER DETAIL (a) OR (b) MAY BE USED IN LIEU OF 1/-. COORDINATE ARCHITECTURAL FINISH REQUIREMENTS.

9 STRAP SPLICE - ALTERNATE
NOT TO SCALE

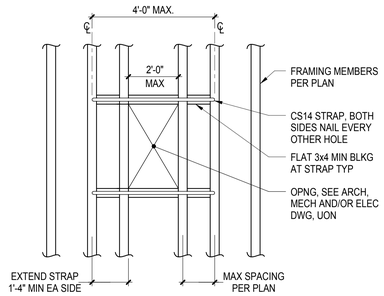

6 SMALL OPENING IN DIAPHRAGM
1/2" = 1'-0"

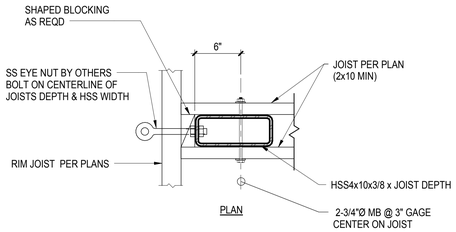

3 EYE BOLT ANCHOR DETAIL
1 1/2" = 1'-0"

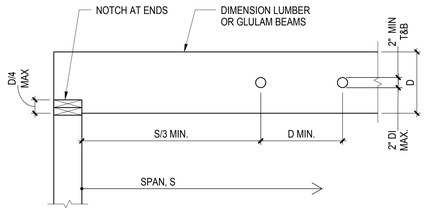

NOTE:
1. NOTCH MAY OCCUR TOP OR BOTTOM, NOT BOTH.

11 HOLES AND NOTCHES IN BEAMS
1" = 1'-0"

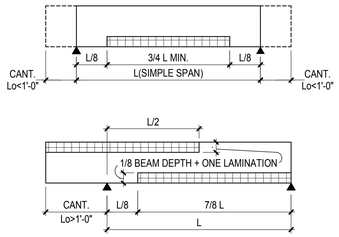

BEAM WITH ONE END CANTILEVERED

CROSS HATCHED AREA = PORTION OF BEAM WHERE THERE SHALL BE 6" MIN. END JOINT SPACING IN ADJACENT LAMINATIONS.

8 GLULAM LAMINATION SPLICE CRITERIA
1" = 1'-0"

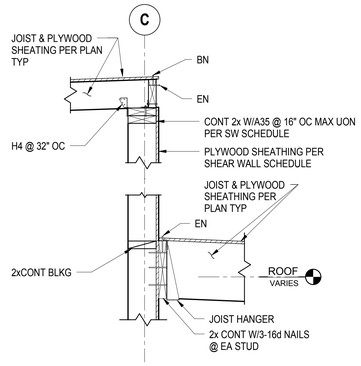

5 SECTION
1" = 1'-0"

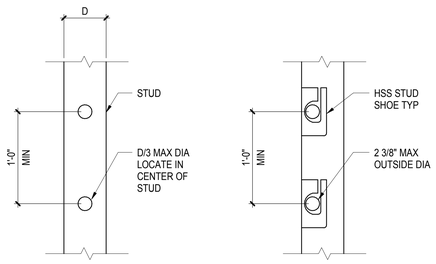

a TYPICAL STUD WALLS

b INTERIOR NON-SHEAR WALLS

10 PENETRATIONS THROUGH WALL STUDS
1 1/2" = 1'-0"

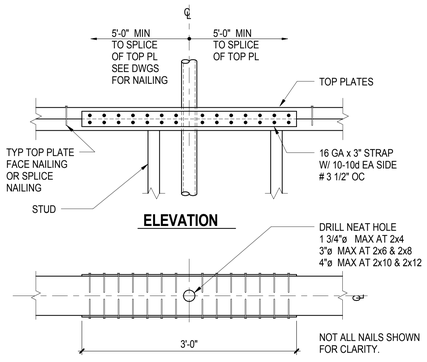

a PLAN VIEW

7 TOP PLATE MEP PENETRATION
1 1/2" = 1'-0"

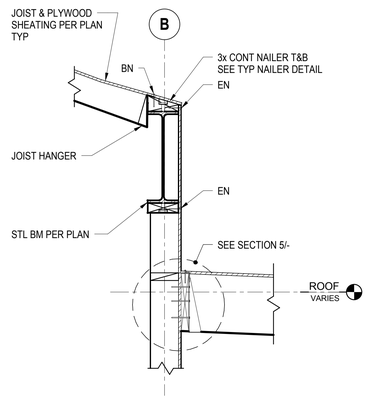

4 SECTION
1" = 1'-0"

PICO BRANCH LIBRARY
Virginia Avenue Park
Santa Monica, CA 90404

PROJECT

KoningEizenberg Architecture
1454 25th St, Santa Monica, CA 90404
310.828.6131 info@kearch.com
310.828.0719 fax www.kearch.com

ARCHITECT'S PROJECT NO.
1001

ARCHITECT

All designs, ideas, arrangements and plans indicated by these drawings are the property and copyright of the Architect and shall neither be used on any other work nor be disclosed to any other person for any use whatsoever without written permission.

Koning Eizenberg Architecture and/or its principals and employees waives any and all liability or responsibility for problems that may occur when these plans, drawings, specifications, and/or designs are followed without the professional's guidance with ambiguities, or conflicts which are alleged.

Thornton Tomasetti
Thornton Tomasetti, Inc.
6080 Center Drive, Suite 260
Los Angeles CA 90045-9204
T 310.665.0010 F 310.665.0101

CONSULTANT

City of Santa Monica Architecture Services
1437 4TH STREET, SUITE 300
SANTA MONICA, CA 90401
TEL. (310) 458-2205
FAX. (310) 399-1541
architecture@smgov.net

SUBMITTED BY : DATE : _____ 20 __

APPROVED BY : Miriam Mulder, Architecture Services Manager DATE : _____ 20 __

CITY OF SANTA MONICA
DEPARTMENT OF PUBLIC WORKS

REVIEWED BY : DATE : _____ 20 __

REVIEWED BY : DATE : _____ 20 __

REVIEWED BY : DATE : _____ 20 __

CITY CLIENT

NO.	DATE	BY	DESCRIPTION

REVISIONS

ISSUE
65% CONSTRUCTION DOCUMENTS / BID SET

DATE
01/23/2012

DRAWING NO. **6693**

SHEET OF SHEETS

SHEET TITLE
TYPICAL WOOD DETAILS

SHEET NO.
S7.02

File Path: C:\Scratch\TT-S10502-PICO BRANCH LIBRARY-CENTRAL_tweir.rvt
On: 1/23/2012 12:12:40 PM

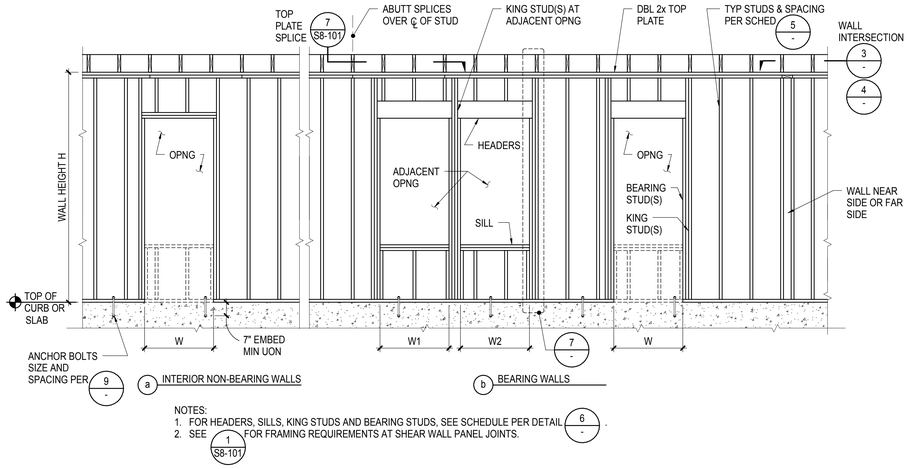

NOTES:
1. FOR HEADERS, SILLS, KING STUDS AND BEARING STUDS, SEE SCHEDULE PER DETAIL 6 -.
2. SEE 1 S8-101 FOR FRAMING REQUIREMENTS AT SHEAR WALL PANEL JOINTS.

12 TYPICAL WALL FRAMING
3/8" = 1'-0"

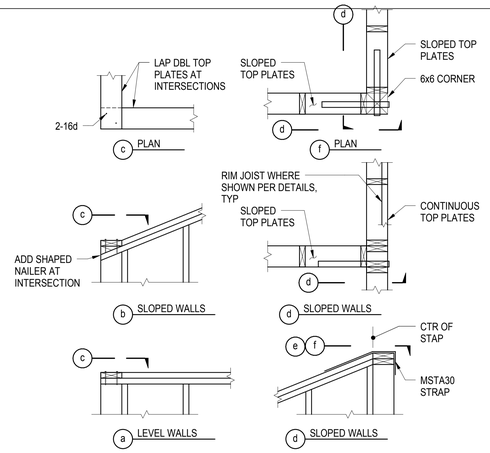

6 TOP PLATE INTERSECTIONS
3/4" = 1'-0"

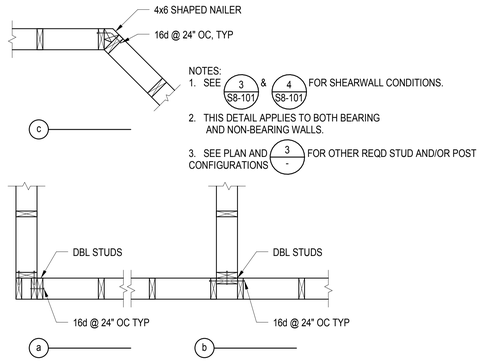

NOTES:
1. SEE 3 S8-101 & 4 S8-101 FOR SHEARWALL CONDITIONS.
2. THIS DETAIL APPLIES TO BOTH BEARING AND NON-BEARING WALLS.
3. SEE PLAN AND 3 - FOR OTHER REQD STUD AND/OR POST CONFIGURATIONS

3 WALL INTERSECTIONS
3/4" = 1'-0"

BEARING WALL SCHEDULE						
OPENING WIDTH	KING STUD(S)	ADJACENT OPENINGS		HEADER[2] DEPTH UON ON PLAN	BEARING STUD(S)	SILL
		COMBINED WIDTH W1+ W2	KING STUD(S)			
W≤ 6'-0"	2-2x	6'-0" MAX	3-2x	8x	1-2x6	1-2x
W≤ 8'-0"	3-2x	8'-0" MAX	4-2x	10x	2-2x6	2-2x
W≤ 10'-0"	3-2x	10'-0" MAX	4-2x	12x	2-2x6	2-2x

a

BEARING WALL STUD SCHEDULE		
WALL HEIGHT	STUD SIZE	SPACING
H ≤ 15'-0"	2x6	16"
15'-0" < H ≤ 19'-0"	2x6	8"

a

INTERIOR NON-BEARING WALL STUD SCHEDULE		
WALL HEIGHT	STUD SIZE	SPACING
H ≤ 10'-0"	2x4	16"
10' < H ≤ 15'-0"	2x6	16"
15'-0" < H ≤ 24'-0"	2x6	8"

b

11 WALL STUD SCHEDULE
1" = 1'-0"

NON-BEARING WALL SCHEDULE						
OPENING WIDTH	KING STUD(S)	ADJACENT OPENINGS		HEADER[2] DEPTH	BEARING STUD(S)	SILL
		COMBINED WIDTH W1+ W2	KING STUD(S)			
W≤ 6'-0"	2-2x	6'-0" MAX	2-2x	2-2x	1-2x	1-2x
W≤ 10'-0"	2-2x	10'-0" MAX	3-2x	3-2x	1-2x	1-2x

b

NOTES:
1. NOTE: AT HD, USE POST PER 10 S7.04 AND ADD KING STUD(S) TO HD POST IF REQUIRED TO CREATE A TOTAL POST WIDTH GREATER THAN THE SCHEDULED KING POST.
2. STUD, SILL, AND HEADER WIDTHS TO MATCH WALL FRAMING SIZE.

8 FRAMING SCHEDULE AT OPENING
1" = 1'-0"

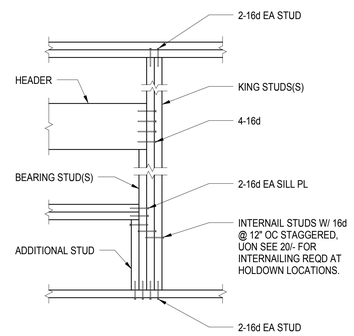

5 WALL OPENING
1" = 1'-0"

POST SCHEDULE		
PLAN DESIGNATION	POST SIZE	COMMENTS
P4	4x4	
P6	6x6	
P8	8x8	
P8a	6x8	
P10	10x10	

NOTES:
1. SEE HOLDOWN SCHEDULE FOR ADDITIONAL POST REQUIREMENTS.
2. SEE GENERAL NOTES FOR REQUIRED LUMBER GRADING.
3. SEE PLAN FOR POST LOCATIONS.

2 POST SCHEDULE
1" = 1'-0"

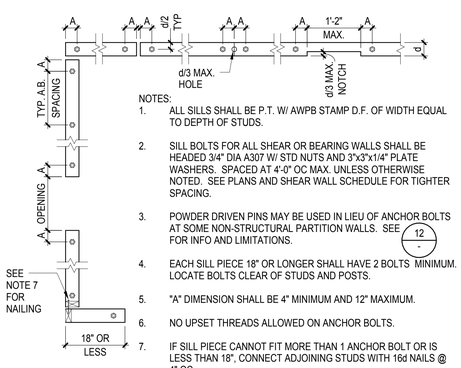

NOTES:
1. ALL SILLS SHALL BE P.T. W/ AWPB STAMP D.F. OF WIDTH EQUAL TO DEPTH OF STUDS.
2. SILL BOLTS FOR ALL SHEAR OR BEARING WALLS SHALL BE HEADED 3/4" DIA A307 W/ STD NUTS AND 3"x3"x1/4" PLATE WASHERS. SPACED AT 4'-0" OC MAX. UNLESS OTHERWISE NOTED. SEE PLANS AND SHEAR WALL SCHEDULE FOR TIGHTER SPACING.
3. POWDER DRIVEN PINS MAY BE USED IN LIEU OF ANCHOR BOLTS AT SOME NON-STRUCTURAL PARTITION WALLS. SEE 12 - FOR INFO AND LIMITATIONS.
4. EACH SILL PIECE 18" OR LONGER SHALL HAVE 2 BOLTS MINIMUM. LOCATE BOLTS CLEAR OF STUDS AND POSTS.
5. "A" DIMENSION SHALL BE 4" MINIMUM AND 12" MAXIMUM.
6. NO UPSET THREADS ALLOWED ON ANCHOR BOLTS.
7. IF SILL PIECE CANNOT FIT MORE THAN 1 ANCHOR BOLT OR IS LESS THAN 18", CONNECT ADJOINING STUDS WITH 16d NAILS @ 4" OC
8. RETIGHTEN ALL BOLTS PRIOR TO CLOSING IN.

10 ANCHOR BOLT AND SILL PLATE
3/4" = 1'-0"

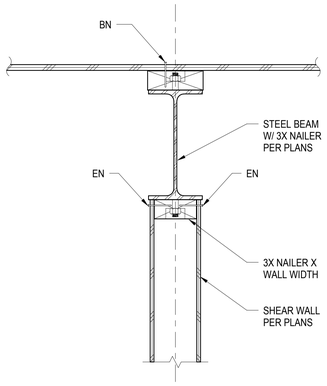

4 SHEAR WALL @ STEEL BEAM
1 1/2" = 1'-0"

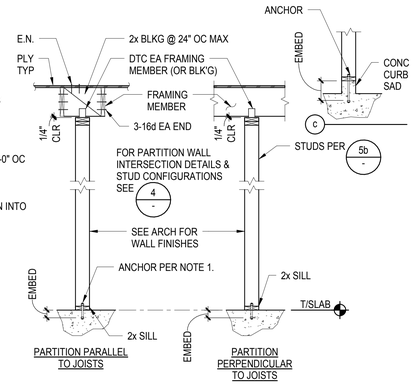

NOTES:
1. AT CONTRACTOR'S OPTIONS ANCHOR IS
   A) 5/8"Ø A.B. @ 4'-0" OC W/ 3" EMBED;
   B) 5/8"Ø SCREW ANCHOR @ 4'-0" OC PER GENERAL NOTES;
   C) PAF W/ 1 3/8" PENETRATION INTO CONC @ 2'-8" OC PER GENNERAL NOTES
2. SEE DETAIL 1 ON THIS SHEET FOR TYPICAL WALL FRAMING. SEE DETAIL 6 ON THIS SHEET FOR FRAMING SCHEDULE AT OPENINGS.
3. FOR CURB CONDITION SEE .

1 NON-BEARING WALL PARTITION
1/2" = 1'-0"

File Path: C:\Scratch\TT-S10502-PICO BRANCH LIBRARY-CENTRAL_lweir.rvt
On: 1/23/2012 12:12:43 PM

PICO BRANCH LIBRARY
Virginia Avenue Park
Santa Monica, CA 90404

PROJECT

KoningEizenberg Architecture
1454 25th St, Santa Monica, CA 90404
310.828.6131 info@kearch.com
310.828.0719 fax www.kearch.com

ARCHITECT'S PROJECT NO.
1001

ARCHITECT

All designs, ideas, arrangements and plans indicated by these drawings are the property and copyright of the Architect and shall neither be used on any other work nor be disclosed to any other person for any use whatsoever without written permission.

Koning Eizenberg Architecture and/or its principals and employees waives any and all liability or responsibility for problems that may occur when these plans, drawings, specifications, and/or designs are followed without the professional's guidance with ambiguities, or conflicts which are alleged.

Thornton Tomasetti
Thornton Tomasetti, Inc.
6080 Center Drive, Suite 260
Los Angeles CA 90045-9204
T 310.665.0010 F 310.665.0101

CONSULTANT

City of Santa Monica Architecture Services
1437 4TH STREET, SUITE 300
SANTA MONICA, CA 90401
TEL. (310) 458-2205
FAX. (310) 399-1541
architecture@smgov.net

DATE : 20
SUBMITTED BY :

DATE : 20
APPROVED BY :
Miriam Mulder,
Architecture Services Manager
CITY OF SANTA MONICA
DEPARTMENT OF PUBLIC WORKS

REVIEWED BY : DATE : 20

REVIEWED BY : DATE : 20

REVIEWED BY : DATE : 20

CITY CLIENT

NO.	DATE	BY	DESCRIPTION

REVISIONS

ISSUE
65% CONSTRUCTION DOCUMENTS / BID SET

DATE
01/23/2012

DRAWING NO. 6693

SHEET OF SHEETS

SHEET TITLE
TYPICAL WOOD WALL FRAMING DETAILS

SHEET NO.
S7.03

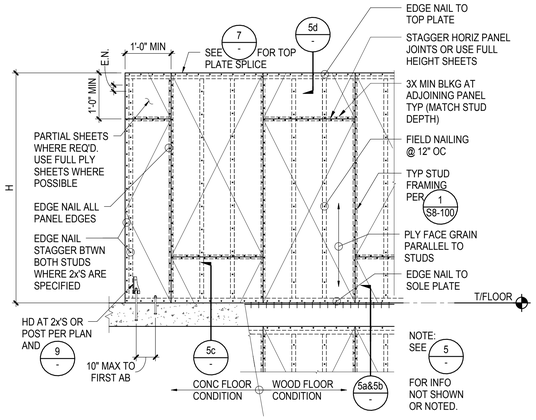

12 SHEARWALL ELEVATION
3/8" = 1'-0"

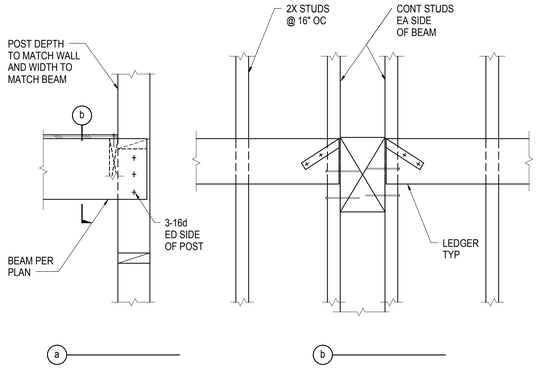

9 BEAM AND POST CONNECTION AT WALL
1" = 1'-0"

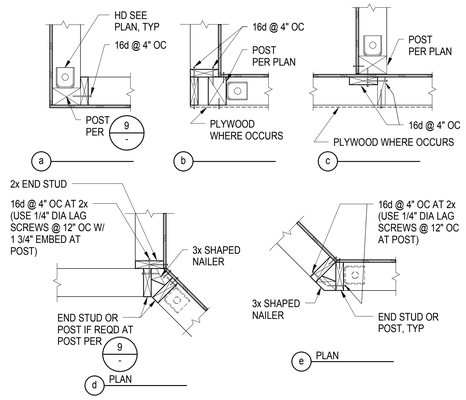

6 SHEARWALL INTERSECTIONS
1" = 1'-0"

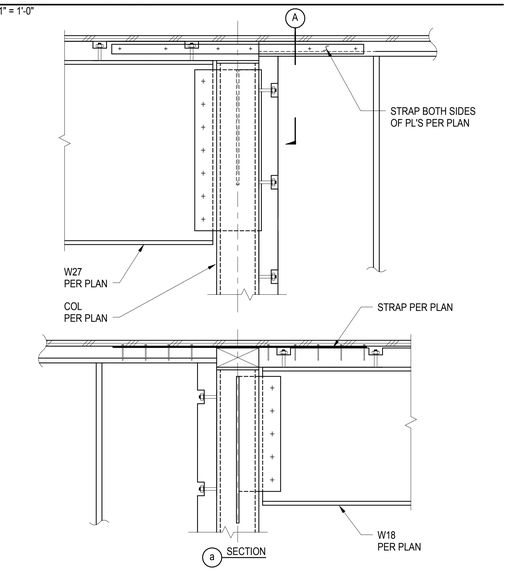

3 NAILER AT HSS COLUMN
1" = 1'-0"

BEARING WALL STUD SCHEDULE						
	DETAIL CONDITION					
	a		b	c		d
SHEARWALL SYMBOL (1) (2)	SOLE PLATE NAILING	SOLE PLATE SIZE	SHEAR CLIP	ANCHOR BOLT	MUD SILL	SHEAR CLIP
◇6◇						
◇4◇(4)						
◇3◇(4)						
◇2◇(4)						
◇4◇◇4◇ (3)(4)						
◇3◇◇3◇ (3)(4)						

NOTES:

1. USE 10d (2 1/8" LONG) COMMON WIRE NAILS UON
2. ◇# NUMBER SHOWN IN SYMBOL REPRESENTS PLYWOOD PANEL EDGE NAIL SPACING IN INCHES.
3. ◇◇◇◇ DENOTES PLYWOOD ON BOTH SIDES OF WALL.
4. PROVIDE 3x FRAMING MEMBERS AT ALL PLYWOOD ADJOINING PANEL EDGES. STAGGER NAILS ON EACH SIDE OF STUD WHERE PLYWOOD IS ON BOTH SIDES.
5. USE LTP4 AS ALTERNATE TO A35 UON.
6. SEE DETAIL 9/S8-100 FOR ANCHOR BOLT AND SILL DETAIL.
7. PILOT DRILL HOLES FOR SOLE PLATE NAILING OR BOLTING.
8. NAILS INTO PRESSURE TREATED MUD SILL SHALL BE GALVANIZED.
9. SEE DETAIL 1/- FOR TYPICAL SHEAR WALL FRAMING ELEVATION.
10. SEE PLAN AND DETAIL 9/- FOR SHEAR WALL HOLDOWNS.

11 SHEARWALL SCHEDULE
1" = 1'-0"

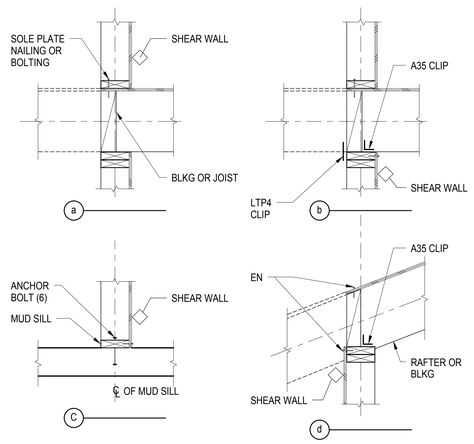

10 SHEARWALL HOLDOWNS INTO FOUNDATION
1 1/2" = 1'-0"

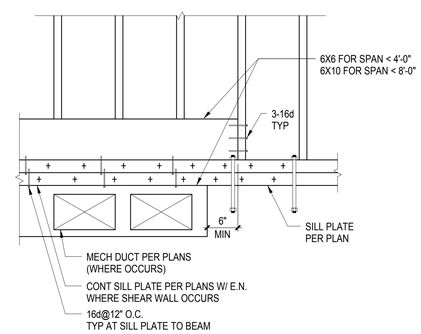

5 DUCT BELOW SHEARWALL
1" = 1'-0"

2 DRAG STRAP @ SHEAR WALL
1 1/2" = 1'-0"

HOLDOWN (1)(2)(3)	POST SIZE UON	MIN ANCHOR ROD DIA	MIN ANCHOR ROD EMBED
HDU2-SD2.5	2-2x SW	5/8"	9"
HDU4-SD2.5	2-2x SW	5/8"	9"
HDU5-SD2.5	3-2x SW	5/8"	9"
HDU8-SD2.5	3-2x SW	7/8"	12"
HDU11-SD2.5	4-2x SW	1"	12"
HDU14-SD2.5	5-2x SW	1"	12"

SW = STUD WIDTH

NOTES:

1. SEE PLAN FOR SIZES & LOCATIONS OF HOLDOWNS.
2. FOR HD AT WALL INTERSECTIONS SEE 3 & 6
3. FOLLOW ALL MANUFACTURER'S GUIDELINES NECESSARY TO ACHIEVE FULL ICC DESIGN VALUES.
4. AT MULTIPLE 2x HOLDOWN POST CONDITION, INTERNAIL STUDS W/ STAGGERED 16d @ 6" OC, UON

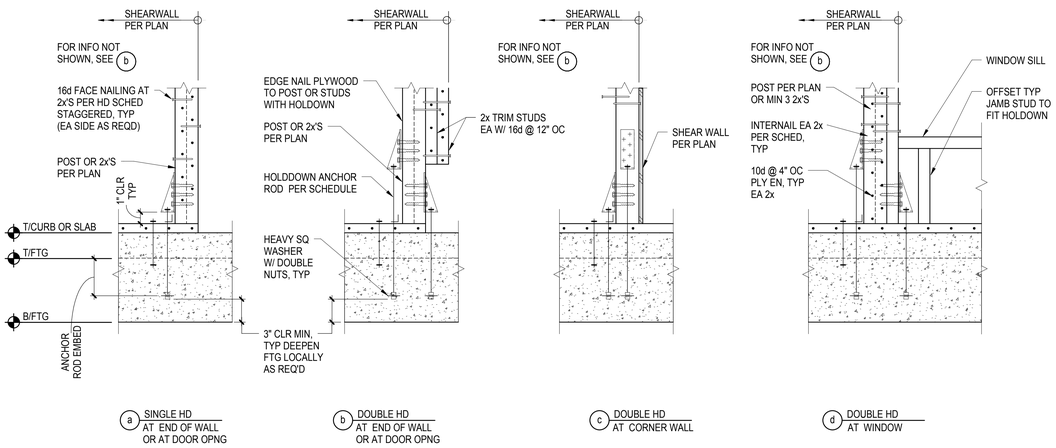

PICO BRANCH LIBRARY
Virginia Avenue Park
Santa Monica, CA 90404

PROJECT

KoningEizenberg Architecture
1454 25th St, Santa Monica, CA 90404
310.828.6131 info@kearch.com
310.828.0719 fax www.kearch.com

ARCHITECT'S PROJECT NO.
1001

ARCHITECT

All designs, ideas, arrangements and plans indicated by these drawings are the property and copyright of the Architect and shall neither be used on any other work nor be disclosed to any other person for any use whatsoever without written permission.

Koning Eizenberg Architecture and/or its principals and employees waives any and all liability or responsibility for problems that may occur when these plans, drawings, specifications, and/or designs are followed without the professional's guidance with ambiguities, or conflicts which are alleged.

Thornton Tomasetti
Thornton Tomasetti, Inc.
6080 Center Drive, Suite 260
Los Angeles CA 90045-9204
T 310.665.0010 F 310.665.0101

CONSULTANT

City of Santa Monica Architecture Services
1437 4TH STREET, SUITE 300
SANTA MONICA, CA 90401
TEL. (310) 458-2205
FAX. (310) 399-1541
architecture@smgov.net

DATE : 20
SUBMITTED BY :

DATE : 20
APPROVED BY :
Miriam Mulder,
Architecture Services Manager

CITY OF SANTA MONICA
DEPARTMENT OF PUBLIC WORKS

REVIEWED BY : DATE : 20

REVIEWED BY : DATE : 20

REVIEWED BY : DATE : 20

CITY CLIENT

NO.	DATE	BY	DESCRIPTION

REVISIONS

ISSUE
65% CONSTRUCTION DOCUMENTS / BID SET

DATE
01/23/2012

DRAWING NO. 6693

SHEET OF SHEETS

SHEET TITLE
TYPICAL WOOD SHEARWALL DETAILS

SHEET NO.
S7.04

File Path: C:\Scratch\T S 10502-PICO BRANCH LIBRARY-CENTRAL_3wer.rvt
On: 1/23/2012 12:16:53 PM

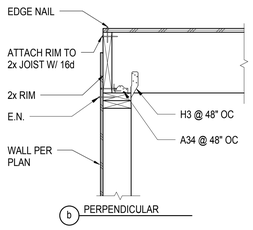

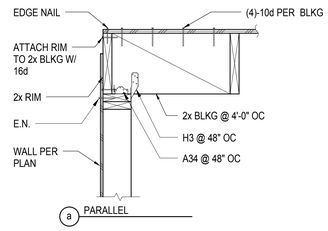

12 ROOF AT EXTERIOR WALL
1" = 1'-0"

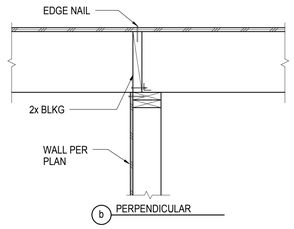

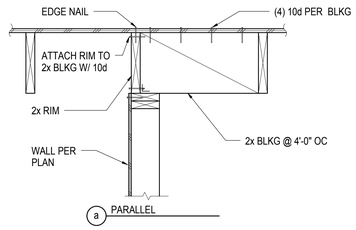

9 ROOF JOIST AT INTERIOR WALL
1" = 1'-0"

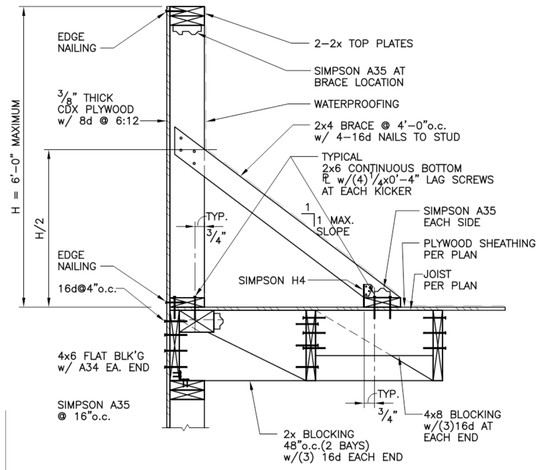

6 TYPICAL PARAPET DETAIL PARALLEL TO JOIST
NOT TO SCALE

NOTES:
1. WHERE JOIST DO NOT ALIGN WITH WALL STUDS, STRAP PER DETAIL 6/-
2. FOR WALLS WITH PLYWOOD SHEATHING ON LEDGER SIDE, SEE DETAIL 10/-

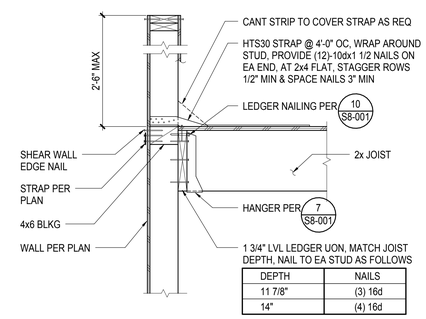

DEPTH	NAILS
11 7/8"	(3) 16d
14"	(4) 16d

11 ROOF JOIST PERPENDUCULAR TO PARAPET WALL
1" = 1'-0"

NOTE:
1. FOR INFO NOT SHOWN OR NOTED, SEE 5/-

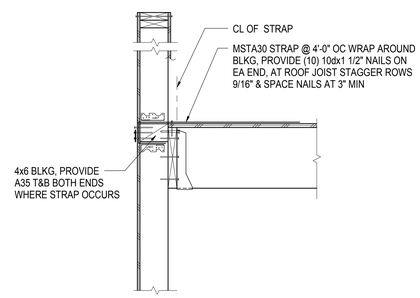

8 ROOF JOIST PERPENDUCULAR TO PARAPET WALL
1" = 1'-0"

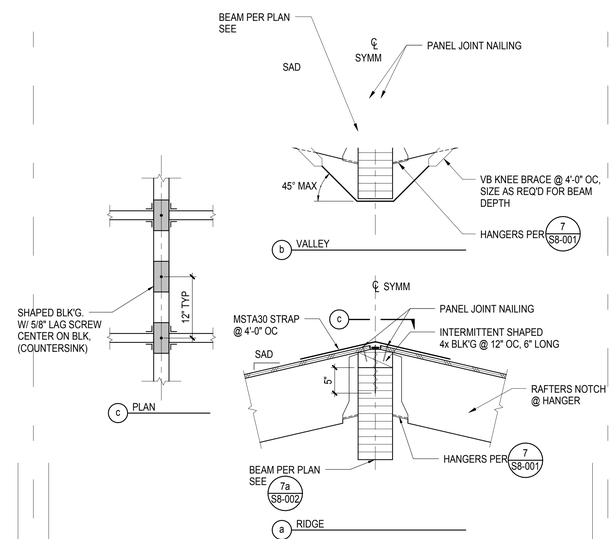

5 RIDGE / VALLEY AT BEAM
1" = 1'-0"

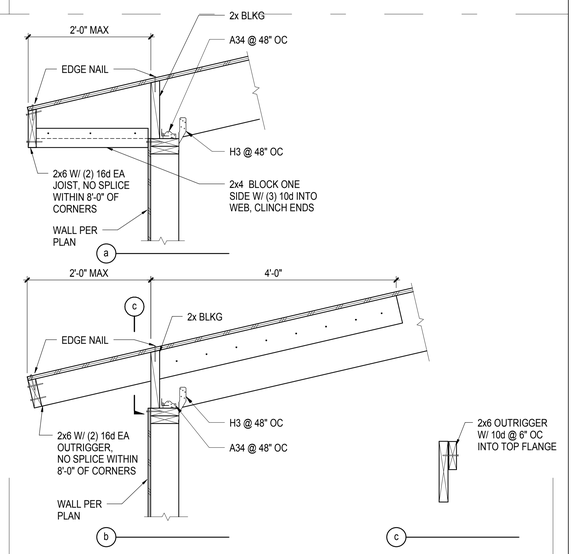

2 ROOF JOIST AT EAVE
1" = 1'-0"

NOTE:
1. FOR INFOR NOT SHOWN OR NOTED, SEE 5/-

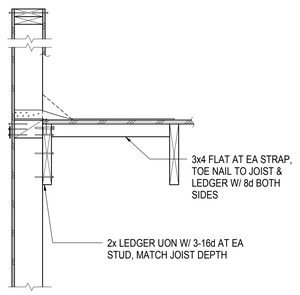

10 ROOF JOIST PARALLEL TO PARAPET WALL
1" = 1'-0"

NOTE:
1. FOR INFOR NOT SHOWN OR NOTED, SEE 5/-

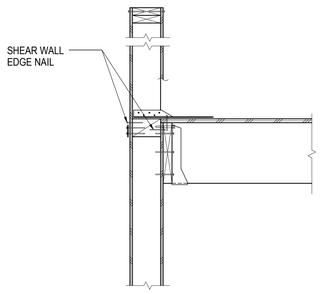

7 LEDGER AT PLYWOOD SHEATHING
1" = 1'-0"

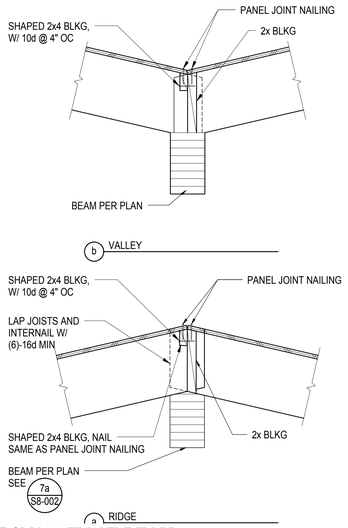

4 RIDGE / VALLEY AT BEAM
1" = 1'-0"

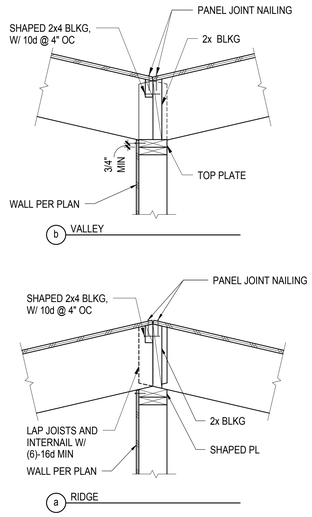

1 RIDGE AT WALL
1" = 1'-0"

PICO BRANCH LIBRARY
Virginia Avenue Park
Santa Monica, CA 90404

PROJECT

KoningEizenberg Architecture
1454 25th St, Santa Monica, CA 90404
310.828.6131 info@kearch.com
310.828.0719 fax www.kearch.com

ARCHITECT'S PROJECT NO.
1001

ARCHITECT

All designs, ideas, arrangements and plans indicated by these drawings are the property and copyright of the Architect and shall neither be used on any other work nor be disclosed to any other person for any use whatsoever without written permission.

Koning Eizenberg Architecture and/or its principals and employees waives any and all liability or responsibility for problems that may occur when these plans, drawings, specifications, and/or designs are followed without the professional's guidance with ambiguities, or conflicts which are alleged.

Thornton Tomasetti
Thornton Tomasetti, Inc.
6080 Center Drive, Suite 260
Los Angeles CA 90045-9204
T 310.665.0010 F 310.665.0101

CONSULTANT

City of Santa Monica Architecture Services
1437 4TH STREET, SUITE 300
SANTA MONICA, CA 90401
TEL. (310) 458-2205
FAX. (310) 399-1541
architecture@smgov.net

DATE : 20
SUBMITTED BY :

DATE : 20
APPROVED BY :
Miriam Mulder,
Architecture Services Manager

CITY OF SANTA MONICA
DEPARTMENT OF PUBLIC WORKS

REVIEWED BY : DATE : 20

REVIEWED BY : DATE : 20

REVIEWED BY : DATE : 20

CITY CLIENT

NO.	DATE	BY	DESCRIPTION

REVISIONS

ISSUE
65% CONSTRUCTION DOCUMENTS / BID SET

DATE
01/23/2012

DRAWING NO. **6693**

SHEET OF SHEETS

SHEET TITLE
TYPICAL ROOF JOIST DETAILS

SHEET NO.
S7.05

File Path: C:\Scratch\TT-S-10502-PICO BRANCH LIBRARY-CENTRAL_Ivestr.rvt
ON: 1/23/2012 12:12:48 PM

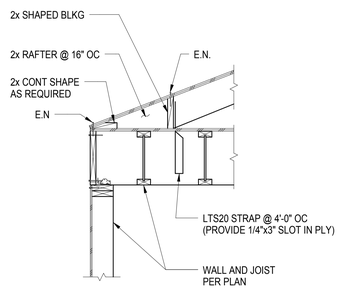

12 CALIFORNIA FRAMING WITH JOIST PERPENDICULAR
3/4" = 1'-0"

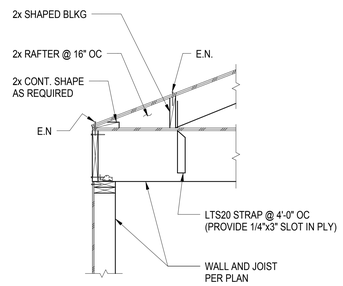

9 CALIFORNIA FRAMING WITH JOIST PARALLEL
3/4" = 1'-0"

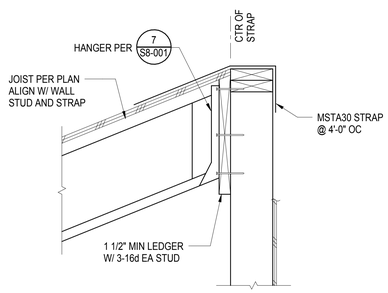

11 ROOF LEDGER
1 1/2" = 1'-0"

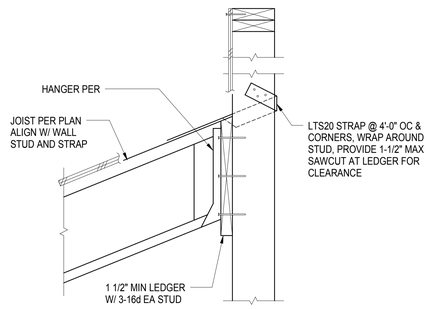

8 ROOF LEDGER
1 1/2" = 1'-0"

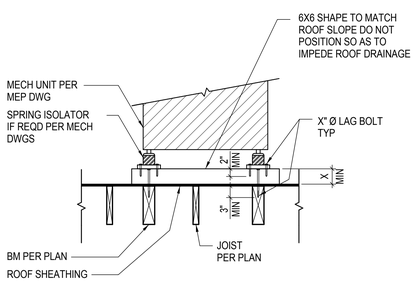

NOTE:
COORDINATE W/
ARCHITECT FOR FLASHING
& ROOFING REQUIREMENTS

10 TYPICAL MECHANICAL UNIT AT ROOF
3/4" = 1'-0"

File Path: C:\Scratch\TT-S10502-PICO BRANCH LIBRARY-CENTRAL_tweir.rvt
ON: 1/23/2012 12:12:49 PM

PICO BRANCH LIBRARY
Virginia Avenue Park
Santa Monica, CA 90404

PROJECT

KoningEizenberg Architecture
1454 25th St, Santa Monica, CA 90404

310.828.6131 info@kearch.com
310.828.0719 fax www.kearch.com

ARCHITECT'S PROJECT NO.
1001

ARCHITECT

All designs, ideas, arrangements and plans indicated by these drawings are the property and copyright of the Architect and shall neither be used on any other work nor be disclosed to any other person for any use whatsoever without written permission.

Koning Eizenberg Architecture and/or its principals and employees waives any and all liability or responsibility for problems that may occur when these plans, drawings, specifications, and/or designs are followed without the professional's guidance with ambiguities, or conflicts which are alleged.

Thornton Tomasetti
Thornton Tomasetti, Inc.
6080 Center Drive, Suite 260
Los Angeles CA 90045-9204
T 310.665.0010 **F** 310.665.0101

CONSULTANT

City of
Santa Monica
Architecture Services

1437 4TH STREET, SUITE 300
SANTA MONICA, CA 90401
TEL. (310) 458-2205
FAX. (310) 399-1541
architecture@smgov.net

SUBMITTED BY : DATE : _____ 20__

APPROVED BY : DATE : _____ 20__
Miriam Mulder,
Architecture Services Manager

CITY OF SANTA MONICA
DEPARTMENT OF PUBLIC WORKS

REVIEWED BY : DATE : _____ 20__

REVIEWED BY : DATE : _____ 20__

REVIEWED BY : DATE : _____ 20__

CITY CLIENT

NO.	DATE	BY	DESCRIPTION

REVISIONS

ISSUE
65% CONSTRUCTION DOCUMENTS / BID SET

DATE
01/23/2012

DRAWING NO. **6693**

SHEET OF SHEETS

SHEET TITLE
TYPICAL ROOF DETAILS

SHEET NO.
S7.06

HVAC LEGEND

GENERAL

SYMBOL	DESCRIPTION
℄	CENTER LINE
	POINT OF CONNECTION
AD/AP	ACCESS DOOR / ACCESS PANEL
T CO2	THERMOSTAT, CO2 SENSOR
TOP / BOTTOM	DETAIL 1, DRAWING M-1
TOP / BOTTOM	SECTION A, DRAWING M-1
TOP / BOTTOM	ELEVATION 1, DRAWING M-1
EXH 1	RISER IDENTIFICATION EXHAUST #1
HP 1	EQUIPMENT IDENTIFICATION HEAT PUMP UNIT #1
KIT_TAG	KITCHEN EQUIPMENT TAG
XX	SHEET NOTE REFERENCE TAG

PIPING

SYMBOL	DESCRIPTION
	DIRECTION OF SLOPE
	DIRECTION OF FLOW
	PIPE UP
	PIPE DOWN
	PIPE DROP/PIPE RISE
	TOP CONNECTION – BRANCH LINE
	BOTTOM CONNECTION – BRANCH LINE
	PIPE ANCHOR
	TEE UP
	TEE DOWN
	STRAINER
	STRAINER WITH BLOW OFF
	INLINE PUMP
	BASE MOUNTED PUMP
	TEST TEE
	TEST TAP (PETE'S PLUG)
	MANUAL AIR VENT
	AUTOMATIC AIR VENT
	VACUUM BREAKER
	VENT THRU ROOF
	PIPE GUIDE
	EXPANSION JOINT
	FLEXIBLE CONNECTOR
	UNION
	CAPPED OR PLUGGED TEE
	BLIND FLANGE, CAP
	CONCENTRIC REDUCER
	ECCENTRIC REDUCER
	EXPANSION LOOP
	VALVE ON RISE

DUCTWORK

SYMBOL (DOUBLE LINE)	DESCRIPTION	SYMBOL (SINGLE LINE)
AD/AP	ACCESS DOOR / ACCESS PANEL	
	FLEXIBLE CONNECTION	
	FLEXIBLE DUCT RUNOUT TO DIFFUSER	
12x6	DUCT SIZE (WIDTH x DEPTH)	12x6
	DUCT THROUGH BEAM PENETRATION	
R D	DUCT OFFSET (RISE OR DROP)	R D
VD	VOLUME DAMPER	VD
FD SD FSD	FIRE, SMOKE OR FIRE/SMOKE DAMPER	FD SD FSD
	SUPPLY DUCT UP	
	SUPPLY DUCT DOWN	
	EXHAUST DUCT UP	
	EXHAUST DUCT DOWN	
	RETURN DUCT UP	
	RETURN DUCT DOWN	
	CROSS SECTION OF SUPPLY DUCT	
	CROSS SECTION OF EXHAUST AIR DUCT	
	CROSS SECTION OF RETURN AIR DUCT	
	CROSS SECTION OF ROUND DUCT	
	DUCT ELBOW WITH TURNING VANES	
	SMOOTH RADIUS DUCT ELBOW WITHOUT TURNING VANES	
12x6	ACOUSTICAL LINING DUCT DIMENSION IS ID	12x6
M	MOTORIZED DAMPER	M
SIZE TD CFM	TRANSFER DUCT (WITH LINER)	SIZE TD CFM
8'-11" BOD	INDICATES 8'11" TO BOTTOM OF DUCT	8'-11" BOD
NECK SIZE-TAG-CFM	ROUND RAISED FLOOR DIFFUSOR (SEE SCHEDULE)	NECK SIZE-TAG-CFM
NECK SIZE-TAG-CFM	ROUND OR SQUARE CEILING SUPPLY DIFFUSER (SEE SCHEDULE) 4-WAY THROW UNLESS INDICATED OTHERWISE.	NECK SIZE-TAG-CFM
NECK SIZE-TAG-CFM	ROUND OR SQUARE CEILING EXHAUST REGISTER (SEE SCHEDULE)	NECK SIZE-TAG-CFM
NECK SIZE-TAG-CFM	ROUND OR SQUARE CEILING RETURN REGISTER (SEE SCHEDULE)	NECK SIZE-TAG-CFM
NECK SIZE-TAG-CFM	ROUND OR SQUARE CEILING RETURN GRILLE (SEE SCHEDULE)	NECK SIZE-TAG-CFM
NECK SIZE-TAG-CFM	ROUND OR SQUARE CEILING RETURN GRILLE (SEE SCHEDULE)	NECK SIZE-TAG-CFM
NECK SIZE-TAG-CFM	ROUND OR SQUARE CEILING RETURN GRILLE (SEE SCHEDULE)	NECK SIZE-TAG-CFM
NECK SIZE-TAG-CFM	WALL SUPPLY REGISTER (SEE SCHEDULE)	NECK SIZE-TAG-CFM
NECK SIZE-TAG-CFM	WALL RETURN REGISTER (SEE SCHEDULE)	NECK SIZE-TAG-CFM
A	LINEAR SLOT DIFFUSER (SEE SCHEDULE)	A
DSD	DUCT SMOKE DETECTOR	

ABBREVIATIONS

AAV	AUTOMATIC AIR VENT
ABV	ABOVE
AC	AIR CONDITIONING
ACCEPT	ACCEPTANCE
ACU	AIR CONDITIONING UNIT
AD	ACCESS DOOR
ADD	ADDITION
AF	AFTER FILTER
AFF	ABOVE FINISHED FLOOR
AFMS	AIR FLOW MEASURING STATION
AFUE	ANNUAL FUEL UTILIZATION EFFICIENCY
AG	AIR GAP
AHJ	AUTHORITY HAVING JURISDICTION
AHU	AIR HANDLING UNIT
AMB	AMBIENT
A	AMPERE
AP	ACCESS PANEL
APPROX	APPROXIMATELY
ARCH	ARCHITECT
ARI	AMERICAN REFRIGERATION INSTITUTE
AS	AIR SEPARATOR
AUTO	AUTOMATIC
AUX	AUXILIARY
B	BOILER
BBD	BOILER BLOW DOWN
BDD	BACKDRAFT DAMPER
BEL	BELOW
BHP	BRAKE HORSEPOWER
BHT	BASEBOARD HEATER
BMS	BUILDING MANAGEMENT SYSTEM
BOD	BOTTOM OF DUCT
BOP	BOTTOM OF PIPE
BPP	BACKFLOW PREVENTER
BSMT	BASEMENT
BTU	BRITISH THERMAL UNIT
BTUH	BTU PER HOUR
BV	BALL VALVE OR BALANCING VALVE
BYV	BUTTERFLY VALVE
C	COMMON, CONDENSATE OR CONDUIT
CA	CONTROL AIR
CAP	CAPACITY
CAV	CONSTANT AIR VOLUME
CB	CHILLED BEAM
CC	COOLING COIL OR CONTROLS CONTRACTOR
CEG	CEILING EXHAUST GRILLE
CER	CEILING EXHAUST REGISTER
CFF	CAP FOR FUTURE
CFM	CUBIC FEET PER MINUTE
CFS	CUBIC FEET PER SECOND
CDWR	CONDENSER WATER RETURN
CDWS	CONDENSER WATER SUPPLY
CHWR	CHILLED WATER RETURN
CHWS	CHILLED WATER SUPPLY
CH	CHILLER
CHV	CHECK VALVE
CL	CENTERLINE
CLG	CEILING
CO	CLEANOUT
COL	COLUMN
COMP	COMPRESSOR
CONC	CONCRETE
COND	CONDENSATE
CONN	CONNECTION
CONT	CONTINUATION
CONTR	CONTRACTOR
COP	COEFFICIENT OF PERFORMANCE
CP	CONTROL PANEL OR CONDENSATE PUMP
CPF	CHEMICAL POT FEEDER
CR	CONDENSATE RETURN
CRR	CEILING RETURN REGISTER
CRG	CEILING RETURN GRILLE
CS	CIRCUIT SETTER
CSD	CEILING SUPPLY DIFFUSER
CTE	CONNECT TO EXISTING
CU FT	CUBIC FEET
CU IN	CUBIC INCH
CV	CONSTANT VOLUME OR CONTROL VALVE
CW	COLD WATER
D	DROP OR DRAIN
DB	DRY BULB TEMPERATURE
DDC	DIRECT DIGITAL CONTROL
DEFL	DEFLECTION
DIA	DIAMETER
DIFF	DIFFERENCE
DN	DOWN
DP	DIFFERENTIAL PRESSURE
DPT	DEW POINT TEMPERATURE
DSD	DUCT SMOKE DETECTOR
DV	DIAPHRAGM VALVE
DWG(S)	DRAWING(S)
DX	DIRECT EXPANSION
EA	EXHAUST AIR OR EACH
EAD	EXHAUST AIR DAMPER
EAT	ENTERING AIR TEMPERATURE
EC	ELECTRICAL CONTRACTOR
ECON	ECONOMIZER
EDB	ENTERING DRY BULB TEMPERATURE
EER	ENERGY EFFICIENCY RATING
EF	EXHAUST FAN
EFF	EFFICIENCY
EJ	EXPANSION JOINT
EL	ELEVATION
ELEC	ELECTRICAL
EMS	ENERGY MANAGEMENT SYSTEM
EQUIP	EQUIPMENT
ESP	EXTERNAL STATIC PRESSURE
EWB	ENTERING WET BULB TEMPERATURE
EWT	ENTERING WATER TEMPERATURE
EXH	EXHAUST
EXPT	EXPANSION TANK
EXT	EXTERNAL
F	FAHRENHEIT OR FILTER
FPB	FAN POWERED BOX
FC	FLEXIBLE CONNECTION OR FAIL CLOSED
FCU	FAN COIL UNIT
FD	FIRE DAMPER
FF	FINAL FILTER OR FINISHED FLOOR
FLR	FLOOR
FO	FAIL OPEN
FPI	FINS PER INCH
FPM	FEET PER MINUTE
FPS	FEET PER SECOND
FSD	FIRE/SMOKE DAMPER
FT	FOOT OR FEET
G	GAS
GA	GAUGE, GAGE
GAL	GALLONS
GALV	GALVANIZED
GC	GAS COCK OR GENERAL CONTRACTOR
GLV	GLOBE VALVE
GN	GENERAL NOTE
GPM	GALLONS PER MINUTE
GND	GROUND
GV	GATE VALVE
H	HEIGHT
HB	HOSE BIBB
HC	HEATING COIL
HD	HEAD
HOR	HORIZONTAL
HP	HIGH PRESSURE
HP	HORSEPOWER
HP	HEAT PUMP
HPC	HIGH PRESSURE CONDENSATE
HPS	HIGH PRESSURE STEAM
HR	HOUR(S)
HRU	HEAT RECOVERY UNIT
HS	HUMIDITY SENSOR
HTR	HEATER
HV	HOSE VALVE
HVAC	HEATING, VENTILATING & AIR CONDITIONING
HW	HOT WATER
HWR	HEATING WATER RETURN
HWS	HEATING WATER SUPPLY
HX	HEAT EXCHANGER
HZ	FREQUENCY (HERTZ)
ID	INSIDE DIAMETER
IN	INCH(ES)
IPLV	INTEGRATED PART LOAD VALUE
JB	JUNCTION BOX
KW	KILOWATT
KWH	KILOWATT HOUR
L	LENGTH
LAT	LEAVING AIR TEMPERATURE
LBS	POUNDS
LDB	LEAVING DRY BULB
LF	LINEAR FEET
LP	LOW PRESSURE
LPC	LOW PRESSURE CONDENSATE
LPS	LOW PRESSURE STEAM
LWB	LEAVING WET BULB
LWT	LEAVING WATER TEMPERATURE
M	MOTOR
MA	MIXED AIR
MAD	MIXED AIR DAMPER
MAX	MAXIMUM
MBH	THOUSAND BTU PER HOUR
MC	MECHANICAL CONTRACTOR
MCA	MINIMUM CIRCUIT AMPACITY
MCC	MOTOR CONTROL CENTER
MD	MOTORIZED DAMPER
MECH	MECHANICAL
MERV	MINIMUM EFFICIENCY RATING VALUE
MFR	MANUFACTURER
MIN	MINIMUM
MOCP	MAXIMUM OVER CURRENT PROTECTION
MPC	MEDIUM PRESSURE CONDENSATE
MPS	MEDIUM PRESSURE STEAM
MV	MANUAL AIR VENT
N/A	NOT APPLICABLE
NC	NORMALLY CLOSED
NIC	NOT IN CONTRACT
NO	NUMBER OR NORMALLY OPEN
NOM	NOMINAL
NPSH	NET POSITIVE SUCTION HEAD
NTS	NOT TO SCALE
OAD	OUTSIDE AIR DAMPER
OAT	OUTSIDE AIR TEMPERATURE
OBD	OPPOSED BLADE DAMPER
OC	ON CENTER
OD	OUTSIDE DIAMETER
OFCI	OWNER FURNISHED CONTRACTOR INSTALLED
OFOI	OWNER FURNISHED OWNER INSTALLED
OPER	OPERATING
OSA	OUTSIDE AIR
OV	OUTLET VELOCITY
P	PUMP OR PRESSURE OR POLE
PC	PUMPED CONDENSATE
PD	PRESSURE DROP
PF	PREFILTER
PG	PIPE GUIDE OR PRESSURE GAUGE
PH	PHASE (ELECTRICAL)
PHC	PREHEAT COIL
PLBG	PLUMBING
POC	POINT OF CONNECTION
PRESS	PRESSURE
PRV	PRESSURE REDUCING VALVE
PS	PRESSURE SENSOR
PSI	POUNDS PER SQUARE INCH
PSIA	PSI ABSOLUTE
PSIG	PSI GAUGE
PV	PLUG VALVE
QTY	QUANTITY
R	RISERS, RELOCATE OR RISE
RA	RETURN AIR
RAD	RETURN AIR DAMPER
RD	REFRIGERANT DISCHARGE OR ROOF DRAIN
REF	ROOFTOP EXHAUST FAN
REFRIG	REFRIGERATION
REJ	REJECTION
REQ'D	REQUIRED
REV	REVISE, REVISION OR REVOLUTIONS
RF	RETURN FAN
RH	RELATIVE HUMIDITY
RHC	REHEAT COIL
RHT	RADIANT HEATER
RM	ROOM
RPM	REVOLUTIONS PER MINUTE
RS	REFRIGERANT SUCTION
RTU	ROOFTOP UNIT
S	SUPPLY OR SLOPE
SA	SUPPLY AIR
SCFM	CFM, STANDARD CONDITIONS
SD	SMOKE DAMPER
SEER	SEASONAL ENERGY EFFICIENCY RATING
SEN	SENSIBLE
SF	SUPPLY FAN OR SQUARE FEET
SHC	SQUARE HEAD COCK
SN	SHEET NOTE
SP	STATIC PRESSURE
SPD	SPLITTER DAMPER
SPEC	SPECIFICATIONS
SQ IN	SQUARE INCH
ST	STRAINER OR SOUND TRAP
STD	STANDARD
STRUCT	STRUCTURAL
SV	STEAM VENT
T	THERMOMETER OR THERMOSTAT
TCP	TEMPERATURE CONTROL PANEL
TDH	TOTAL DYNAMIC HEAD
TEMP	TEMPERATURE
TI	TENANT IMPROVEMENT
TRG	TRANSFER GRILLE
TS	TEMPERATURE SENSOR
TSP	TOTAL STATIC PRESSURE
TT	TEST TAP OR TEST TEE
TXV	THERMAL EXPANSION VALVE
(TYP)	TYPICAL
U	HEAT TRANSFER COEFFICIENT
UG	UNDERGROUND
UH	UNIT HEATER
UON	UNLESS OTHERWISE NOTED
V	VENT OR VOLT OR VELOCITY
VAV	VARIABLE AIR VOLUME
VB	VACUUM BREAKER
VD	VOLUME DAMPER
VEL	VELOCITY
VERT	VERTICAL
VFD	VARIABLE FREQUENCY DRIVE
VFM	VENTURI FLOW METER
VOL	VOLUME
VTR	VENT THROUGH ROOF
W	WASTE OR WIDTH OR WATTS
W/	WITH
W/O	WITHOUT
WB	WET BULB TEMPERATURE
WC	WATER COLUMN
WEG	WALL EXHAUST GRILLE
WG	WATER GAUGE
WP	WORKING PRESSURE
WPD	WATER PRESSURE DROP
WRR	WALL RETURN REGISTER
WSHP	WATER-SOURCE HEAT PUMP
WSR	WALL SUPPLY REGISTER
WT	WEIGHT
XFMR	TRANSFORMER
Z	ZONE

HVAC BASIS OF DESIGN

1. CODES AND STANDARDS
   A. AMERICANS WITH DISABILITIES ACT, (ADA)
   B. BUILDING CODES ENFORCED BY THE AUTHORITY HAVING JURISDICTION IN CALIFORNIA:
      1. 2010 CALIFORNIA BUILDING CODE (CBC) BASED ON 2009 INTERNATIONAL BUILDING CODE (IBC) WITH STATE AMENDMENTS.
      2. 2010 CALIFORNIA MECHANICAL CODE (CMC) BASED 2009 UNIFORM MECHANICAL CODE (UMC) WITH STATE AMENDMENTS.
      3. 2010 TITLE 24, PART 6 CALIFORNIA ENERGY EFFICIENCY STANDARDS FOR RESIDENTIAL AND NONRESIDENTIAL BUILDINGS
2. OUTDOOR DESIGN CONDITIONS
   A. SUMMER: 78°F DB/66°F WB (ASHRAE 0.5% SANTA MONICA, CA)
   B. WINTER: 44°F (ASHRAE 99%, SANTA MONICA, CA)
   C. ELEVATION: 15 FT.
   D. CALIFORNIA CLIMATE ZONE: 6
3. INDOOR DESIGN CONDITIONS
   A. ALL AREAS:
      1. COOLING 72°F +/-2°F
      2. HEATING 68°F +/-2°F
   B. EXCEPTIONS:
      1. ELEC. ROOMS: EXHAUST ONLY, 10°F ABOVE PLENUM TEMP
      2. DATA ROOMS: COOLING ONLY, 72°F +/-2°F
   C. HUMIDITY CONTROL
      1. ALL OTHER AREAS: NONE
4. VENTILATION CRITERIA:
   A. ALL AREAS: 15 CFM/PERSON AND 0.12 CFM/SQ.FT. MINIMUM
5. EXHAUST TO OUTDOORS
   A. TOILET ROOMS: 10 AIR CHANGES PER HOUR
6. BUILDING ENVELOPE
   A. GLAZING: GLASS/FRAME COMBINATION
      1. TYPICAL VERTICAL:
         a.DESCRIPTION: DOUBLE PANE, LOW-E, THERMAL BREAK FRAME
         b.U = 0.26 BTU/hxft2xF (GLASS ONLY)
         c.U = 0.436 BTU/hxft2xF (WITH FRAME)
         d.SHADING COEFFICIENT = 0.355
      2. TYPICAL SKYLIGHT:
         a.DESCRIPTION: DOUBLE PANE, LOW-E, THERMAL BREAK FRAME
         b.U = 0.26 BTU/hxft2xF (GLASS ONLY)
         c.U = 0.5 BTU/hxft2xF (WITH FRAME)
         d.SHADING COEFFICIENT = 0.5
   B. WALL CONSTRUCTION:
      1. DESCRIPTION: STUCCO WITH R-19 BATT INSULATION
      2. OVERALL U-VALUE = 0.438 BTU/hxft2xF
   C. ROOF:
      1. DESCRIPTION: LIGHT COLORED MEMBRANE WITH R-30 INSULATION
      2. OVERALL U-VALUE = 0.214 BTU/hxft2xF
7. INTERNAL HEAT GAIN
   A. LIGHTING:
      1. 1.2 W/SQ. FT.
      2. 20% OF LIGHTING HEAT TO PLENUM
   B. RECEPTACLE POWER:
      1. 0 W/SQ. FT.
   C. OCCUPANTS:
      1. 245 BTU/H SENSIBLE/205 BTU/H LATENT
   D. ELECTRICAL TRANSFORMERS: 3% LOSS/50% DIVERSITY
   E. IDF ROOM:
      SERVER+IT EQUIPMENT: 10.000 BTU/H
8. OCCUPANCY CRITERIA:
   A. OFFICE: 1 PERSON/100 SQ. FT.
   B. CONFERENCE ROOM: 1 PERSON/15 SQ. FT.
   C. COMMUNITY CENTER: 1 PERSON/15 SQ. FT.
   D. LIBRARY: 1 PERSON/50 SQ. FT.
9. DUCTWORK DESIGN CRITERIA
   A. ALL DUCTWORK: 0.08" W.G./100 FT. MAX
   B. MEDIUM PRESSURE SUPPLY
      1. 1500 FPM MAX ABOVE CEILING
      2. 2000 FPM MAX IN SHAFT
   C. RETURN VELOCITY: 1500 FPM MAX
   D. EXHAUST VELOCITY: 1500 FPM MAX.
10. PIPE DESIGN CRITERIA
   A. MAX PRESSURE DROP: 4 FT. W.G./100 FT.
   B. MAX VELOCITY:
      1. 8 FT/SEC MAX IN OCCUPIED AREAS
      2. 10 FT/SEC MAX IN MECHANICAL ROOMS

HVAC DRAWING LIST

M0.1	MECHANICAL LEAD SHEET
M1.0	MECHANICAL UNIT SCHEDULES
M2.0	MECHANICAL FLOOR PLAN
M2.0A	MECHANICAL FLOOR PLAN (UNDERFLOOR)
M2.1	MECHANICAL ROOF PLAN
M4.0	MECHANICAL DETAILS

PICO BRANCH LIBRARY

2201 Pico Blvd.
Santa Monica, CA 90404

PROJECT

KoningEizenbergArchitecture
1454 25th St, Santa Monica, CA 90404
310.828.6131 info@kearch.com
310.828.0719 fax www.kearch.com

ARCHITECT'S PROJECT NO.
1001

ARCHITECT

All designs, ideas, arrangements and plans indicated by these drawings are the property and copyright of the Architect and shall neither be used on any other work nor be disclosed to any other person for any use whatsoever without written permission.

Koning Eizenberg Architecture and/or its principals and employees waives any and all liability or responsibility for problems that may occur when these plans, drawings, specifications, and/or designs are followed without the professional's guidance with ambiguities, or conflicts which are alleged.

REGISTERED PROFESSIONAL ENGINEER
HENRY Y. LAM
No. M33781
Exp. 06-30-13
MECHANICAL
STATE OF CALIFORNIA

GLUMAC
617 W. 7th Street, Suite 500
Los Angeles, CA 90017
T. 213.239.8866 F. 213.239.8816
www.glumac.com
Job No.:
Contact:
engineers for a sustainable future™

CONSULTANT

City of Santa Monica
Architecture Services
1437 4TH STREET, SUITE 300
SANTA MONICA, CA 90401
TEL. (310) 458-2205
FAX. (310) 399-1541
architecture@smgov.net

DATE: 20
SUBMITTED BY:

DATE: 20
APPROVED BY: Miriam Mulder, Architecture Services Manager

CITY OF SANTA MONICA
DEPARTMENT OF PUBLIC WORKS

REVIEWED BY: DATE: 20

REVIEWED BY: DATE: 20

REVIEWED BY: DATE: 20

CITY CLIENT

NO.	DATE	BY	DESCRIPTION

REVISIONS

ISSUE
65% CONSTRUCTION DOCUMENTS / BID SET

DATE
01/23/2012

DRAWING NO. **6693**

SHEET OF SHEETS

SHEET TITLE
MECHANICAL LEAD SHEET

SHEET NO.
M0.1

SHEET OF

DWG NO. -

TITLE OF PROJECT

PACKAGED ROOFTOP UNIT SCHEDULE (NATURAL GAS)

TAG	MFR & MODEL	LOCATION	AREA SERVED	NOM. CAP. (TONS)	SUPPLY AIRFLOW (CFM)	SUPPLY MIN OSA (CFM)	SUPPLY ESP (IN.WG.)	SUPPLY HP	EER	SEER	COOLING TOTAL (MBH)	COOLING SENS (MBH)	COOLING EAT DB/WB (°F)	COOLING LAT DB/WB (°F)	HEATING INTPUT (MBH)	HEATING OUTPUT (MBH)	FILTER TYPE	ELECTRICAL V/PH	ELECTRICAL MCA (A)	ELECTRICAL MOCP (A)	UNIT SIZE (L"xW"xH")	OPER. WT. (LBS)	NOTES
RTU-1	AAON RN006	ROOF	CHILDREN'S LIBRARY/POP MATERIAL	6	2,800	400	2.26	2	12.5	14.3	58.0	56.0	76.3/63.4	57.6/56.4	90.0	73	MERV 13	460/3/60	18	25	83x79x44	1300	1,2,3,4,5,6,7,8,9,10,11
RTU-2	AAON RQ003	ROOF	MANAGER RM/STAFF/GROUP STUDY	3	800	350	2.07	1	13.55	15.7	37.0	26.0	81/66.2	51.1/49.4	60.0	49	MERV 13	460/3/60	13	15	83x45x45	800	1,2,3,4,5,6,8,9,10,11
RTU-3	AAON RQ003	ROOF	COMPUTER COMMONS	3	2,000	600	2.94	2	13.55	15.7	39.0	39.0	78.8/64.9	60.6/58.5	60.0	49	MERV 13	460/3/60	16	20	83x45x45	900	1,2,3,4,5,6,7,8,9,10,11
RTU-4	AAON RQ003	ROOF	COLLECTION & SEATING	3	2,200	300	3.06	2	13.55	15.7	38.0	38.0	76.3/63.4	59.7/57.4	60.0	49	MERV 13	460/3/60	16	20	83x45x45	900	1,2,3,4,5,6,7,8,9,10,11
RTU-5	AAON RQ005	ROOF	COMMUNITY ROOM	3	2,200	600	3.06	2	13.55	15.7	39.0	39.0	78.6/64.8	61.2/58.6	60.0	49	MERV 13	460/3/60	16	20	83x45x45	900	1,2,3,4,5,6,7,8,9,10,11

NOTES
1. FUSED DISCONNECT PROVIDED BY ELEC CONTRACTOR.
2. SEE PLUMBING PLAN FOR GAS LINE AND CONDENSATE DRAIN LINE.
3. PROVIDE 14" PRE-FABRICATED ROOF CURB WITH SPRING ISOLATORS.
4. VERTICAL DISCHARGES FOR SUPPLY AIR AND RETURN AIR.
5. PROVIDE ENVIRONMENTAL PROTECTIVE PAINT ON COILS.
6. PROVIDE MANUFACTURER PROGRAMMABLE THERMOSTAT CAPABLE TO CONNECT WITH BMS SYSTEM.
7. PROVIDE CO2 SENSOR TO MODULATE THE OUTSIDE AIR INTAKE TO MEET THE CODE REQUIREMENT.
8. PROVIDE ECONOMIZER WITH POWER EXHAUST FAN.
9. REFRIGERANT TYPE R-410A.
10. PROVIDE CONVENIENCE POWER OUTLET.
11. FRESH AIR INTAKE MUST BE MIN. 10' AWAY FROM ANY EXHAUST AIR OR VENT.

FAN SCHEDULE

UNIT NO.	MANUFACTURER & MODEL NO.	LOCATION	AREA SERVED	TYPE	C.F.M.	E.S.P. (IN.)	FAN R.P.M.	DRIVE	ELECTRICAL VOLTAGE V./PH./HZ	ELECTRICAL HP	DIMENSION LxWxH (IN)	OPER. WT. (LBS.)	REMARKS
EF 1	COOK 100 ACE-B	ROOF	MAIN RESTROOMS	CENTRIFUGAL	640	0.49	1532	BELT	120/1/60	0.125	24x24x22	30	1,2,4
EF 2	COOK 90 ACWD	WALL	LOUNGE	CENTRIFUGAL	180	0.44	1710	DIRECT	120/1/60	0.125	22x22x16	28	1,2
EF 3	COOK 70 ACE-B	ROOF	PANTRY	CENTRIFUGAL	130	0.34	1150	BELT	120/1/60	0.167	24x24x22	30	1,2,4
EF 4	COOK 60 ACE-B	ROOF	COMMUNITY RESTROOMS	CENTRIFUGAL	70	0.32	1112	BELT	120/1/60	0.167	24x24x22	30	1,2,4
EF 5	COOK 60 ACE-B	ROOF	ELECTRICAL ROOM	CENTRIFUGAL	60	0.34	1120	BELT	120/1/60	0.167	24x24x22	30	2,3,4
GV 1	COOK 8 PR	ROOF	AV ROOM	GRAVITY	20	0.15	–	–	–	–	19X19X8	–	4

NOTES
1. PROVIDE PROGRAMMABLE CONTROL TO TURN ON THE FAN DURING OPERATING HOURS BY BMS SYSTEM.
2. EXHAUST AIR DISCHARGE MUST BE 10' AWAY FROM ANY FRESH AIR INTAKE.
3. EXHAUST FAN SHOULD BE ON BY ROOM THERMOSTAT WHEN ROOM TEMPERATURE IS HIGHER THAN 85°F. SYSTEM SHOULD BE MONITORED BY BMS SYSTEM.
4. PROVIDE MANUFACTURED ROOF CURB.

ROOFTOP UNIT - SEQUENCE OF OPERATION

1. GENERAL NOTES:

A. PROVIDE ALL NECESSARY HARDWARE AND SOFTWARE INCLUDING, BUT NOT LIMITED TO, CONTACTS, INSTRUMENTATION, WIRING AND CONDUITS TO ACCOMPLISH THE FOLLOWING CONTROL AND CONTROL SEQUENCE FOR THE HEATING, VENTILATING AND AIR CONDITIONING SYSTEM UNLESS OTHERWISE NOTED ON THE DRAWINGS AND SPECIFIED ELSEWHERE.
B. ALL CONTROL SET POINTS SHALL BE ADJUSTABLE.

2. ROOFTOP PACKAGE UNITS:

A. ROOFTOP UNITS SHOULD BE CONTROLLED AND MONITORED BY THE BMS. UNITS SHOULD BE ON DURING THE OPERATING HOURS.
B. DUCT SMOKE DETECTOR IN THE MAIN SUPPLY AIR DUCT SHOULD TURN OFF RTU, WHEN SMOKE IS DETECTED.
C. SUPPLY ROOM TEMPERATURE SHOULD BE PRE-SET AT THE BMS SYSTEM. ROOM THERMOSTAT SHOULD ALLOW THE ROOM OCCUPANTS TO ADJUST THE ROOM TEMPERATURE BY +/- 2°F.
D. PRESSURE SENSOR IN THE UNDERFLOOR AIR PLENUM SHOULD ADJUST THE SUPPLY FAN TO INCREASE/DECREASE THE SUPPLY AIR VOLUME. PRESSURE IN THE UNDERFLOOR AIR PLENUM WILL BE CHANGED BASED ON THE DIFFUSER AIR VOLUME ADJUSTMENT ON THE RISED FLOOR.
E. CO2 SENSOR IN THE ROOM TO MODEULATE THE OUTSIDE AIR DAMPER OF RTU TO MEET THE MINIMUM AIR QUALITY REQUIREMENTS.
F. ECONOMIZER CONTROLLER SHALL CONTROL THE RETURN AND OUTDOOR AIR DAMPERS AND POWER EXHAUST FAN FOR MAXIMUM FREE COOLING. ENTHALPY ECONOMIZER CONTROLS SHALL BE PROVIDED. ECONOMIZER SHOULD OVERRIDE THE CO2 CONTROL.
   1. WHEN OUTDOOR ENTHALPY IS ABOVE THE RETURN AIR ENTHALPY, SYSTEM SHALL OPERATE WITH MINIMUM OUTSIDE AIR REQUIRED FOR VENTILATION. OA ECONOMIZER DAMPER SHALL BE CLOSE AND THE FLOW METER AT MINIMUM OUTSIDE AIR DUCT SHALL MODULATE THE OUTSIDE AIR DAMPER TO MAINTAIN THE DESIGN MINIMUM OUTDOOR VENTILATION FOR THE SYSTEM.
   2. WHEN THE OUTDOOR AIR ENTHALPY IS BELOW THE RETURN AIR ENTHALPY AND THE OUTDOOR TEMPERATURE IS ABOVE THE DISCHARGE DUCT TEMPERATURE SETPOINT, OA ECONOMIZER DAMPER WITH THE MINIMUM OA DAMPER SHALL BE POSITIONED FOR 100% OUTSIDE AIR. ANY ADDITIONAL COOLING WILL BE PROVIDED BY CHILLED WATER COILS.
   3. WHEN THE OUTDOOR AIR TEMPERATURE IS BELOW THE SUPPLY DUCT TEMPERATURE SETPOINT, ECONOMIZER DAMPERS SHALL BE MODULATED TO MIX RETURN AIR AND OUTSIDE AIR SO THAT THE DISCHARGE DUCT TEMPERATURE SETPOINT IS MAINTAINED.

FAN COIL UNIT SCHEDULE

TAG	MFR & MODEL	LOCATION / MOUNTING	AREA SERVED	SUPPLY AIR (CFM)	OSA (CFM)	ESP (IN.WG.)	COOLING COIL TOTAL COOLING (MBH)	HEATING COIL TOTAL HEATING (MBH)	ELECTRICAL V/PH	ELECTRICAL MOTOR MCA	ELECTRICAL MOTOR FLA	ELECTRICAL MOTOR FUSE	SEER	OUTDOOR UNIT	UNIT SIZE (L"xW"xH")	OPER. WT. (LBS)	NOTES
FC-1	CARRIER FE4ANF002000	CEILING CONCEALED	WORK ROOM	600	190	0.65	25.0	24.0	208/1	5.4	4.3	15.0	19.1	CU-1	22x18x43	135	1,2,3
FC-2	CARRIER RAV-SP240KRT-UL	WALL MOUNTED	IT ROOM	560	0	0.25	25.0	N/A	208/1	N/A	N/A	N/A	16.7	CU-2	9x41x13	31	1,2,3

NOTES:
1. FUSE DISCONNECT BY ELECTRICAL CONTRACTOR
2. SIZE REFRIGERANT PIPES PER MANUFACTURER'S INSTALLATION MANUAL AND ACTUAL CONSTRUCTION CONDITIONS.
3. INSULATE REFRIGERANT PIPES PER MANUFACTURER'S RECOMMENDATIONS

AIR-COOLED CONDENSER UNIT SCHEDULE

TAG	MFR & MODEL	LOCATION	EQUIP. SERVED	NOM. CAP. (TONS)	EER	SEER	REFRIG	ELECTRICAL V/PH	ELECTRICAL MCA (A)	ELECTRICAL MOCP (A)	UNIT SIZE (L"XW"xH")	OPER. WT. (LBS)	NOTES
CU-1	CARRIER 25VNA024A003	ROOF	FC-1	2.0	14.7	19.1	R-410	208/1	23.5	30	36x39x50	367	1,2,3,4,5
CU-2	CARRIER RAV-SP240AT2-UL	ROOF	FC-2	2.0	9.1	16.7	R-410	208/1	24.0	40.0	13x35x35	135	1,2,3,4,5

NOTES
1. FUSED DISCONNECT PROVIDED BY ELEC CONTRACTOR.
2. CAPACITY RATED AT ARI STANDARD CONDITIONS.
3. INSULATE REFRIGERANT PIPES PER MANUFACTURER'S RECOMMENDATIONS
4. SIZE REFRIGERANT PIPES PER UNIT MANUFACTURER'S INSTALLATION MANUAL AND ACTUAL CONSTRUCTION CONDITIONS.
5. MOUNT ON LEVELED PLATFORM WITH NEOPRENE PAD. THE SHALLOW SIDE OF THE PLATFORM MUST BE MIN. 4" ABOVE THE ROOF.

DIFFUSER AND GRILLE SCHEDULE

TAG	MFR	MODEL	DESCRIPTION	FACE TYPE	FACE SIZE (IN.)	COLOR / FINISH	MATERIAL	OBD	NOTES
A	KRUEGER	FPDFR-R	RAISED FLOOR DIFFUSOR	CURVED SLOT	9 3/4'	PER ARCHITECT	POLYCARBONATE	NO	1,2,3,4,5
B	TITUS	PAR-AA	CEILING RETURN/EXHAUST GRILLE	SURFACE MOUNT	12"x12"	PER ARCHITECT	ALUMINUM	NO	1,2,3,4,5
C	TITUS	3FL	SIDEWALL RETURN/EXHAUST GRILLE	SURFACE MOUNT	DUCT SIZE + 3"	PER ARCHITECT	ALUMINUM	NO	1,2,3,4,5
D	TITUS	ML	SLOT SUPPLY	SLOT	2 X 1" SLOT	PER ARCHITECT	ALUMINUM	NO	1,2,3,4,5
E	TITUS	MLR	SLOT RETURN	SLOT	4 X 1" SLOT	PER ARCHITECT	ALUMINUM	NO	1,2,3,4,5,7
F	TITUS	MLR	SLOT RETURN	SLOT	2 x 1" SLOT	PER ARCHITECT	ALUMINUM	NO	1,2,3,4,6,7
G	TITUS	MLR	SLOT RETURN	SLOT	1" SLOT	PER ARCHITECT	ALUMINUM	NO	1,2,3,4,6,7
H	TITUS	ML	SLOT SUPPLY	SLOT	1" SLOT	PER ARCHITECT	ALUMINUM	NO	1,2,3,4,5

NOTES
1. MAXIMUM TOTAL PRESSURE DROP SHALL BE 0.1" WG.
2. MAXIMUM NC LEVEL SHALL BE 35.
3. ALL VISIBLE SURFACES AND DUCTWORK BEHIND FACE SHALL BE PAINTED FLAT BLACK.
4. COORDINATE WITH ARCHITECTURAL REFLECTED CEILING PLANS FOR BORDER TYPES.
5. NECK SIZE AND CFM SHOWN ON PLANS (E.G. 12x12-A-400 REFERS TO TAG "A" WITH 12x12 NECK AND 400 CFM).
6. PLENUM CONNECTION SIZE, SLOT LENGTH, AND CFM SHOWN ON PLANS (E.G. 8-120-A-2000 REFERS TO TAG "A" WITH 8" ROUND CONNECTION(S), 120" CONTINUOUS SLOT LENGTH AND 2000 CFM).
7. PROVIDE MANUFACTURER'S INSULATED PLENUM.

SHEET OF

DWG NO. -

TITLE OF PROJECT:

PICO BRANCH LIBRARY

2201 Pico Blvd.
Santa Monica, CA 90404

PROJECT

KoningEizenbergArchitecture
1454 25th St, Santa Monica, CA 90404
310.828.6131 info@kearch.com
310.828.0719 fax www.kearch.com

ARCHITECT'S PROJECT NO.
1001

ARCHITECT

All designs, ideas, arrangements and plans indicated by these drawings are the property and copyright of the Architect and shall neither be used on any other work nor be disclosed to any other person for any use whatsoever without written permission.

Koning Eizenberg Architecture and/or its principals and employees waives any and all liability or responsibility for problems that may occur when these plans, drawings, specifications, and/or designs are followed without the professional's guidance with ambiguities, or conflicts which are alleged.

REGISTERED PROFESSIONAL ENGINEER
HENRY Y. LAM
No. M33781
Exp. 06-30-13
MECHANICAL
STATE OF CALIFORNIA

GLUMAC
617 W. 7th Street, Suite 500
Los Angeles, CA 90017
T. 213.239.8866 F. 213.239.8816
www.glumac.com
Job No.:
Contact:

engineers for a sustainable future™

CONSULTANT

City of Santa Monica
Architecture Services
1437 4TH STREET, SUITE 300
SANTA MONICA, CA 90401
TEL. (310) 458-2205
FAX. (310) 399-1541
architecture@smgov.net

DATE : 20
SUBMITTED BY :

DATE : 20
APPROVED BY :
Miriam Mulder,
Architecture Services Manager

CITY OF SANTA MONICA
DEPARTMENT OF PUBLIC WORKS

REVIEWED BY : DATE : 20

REVIEWED BY : DATE : 20

REVIEWED BY : DATE : 20

CITY CLIENT

NO.	DATE	BY	DESCRIPTION

REVISIONS

ISSUE
65% CONSTRUCTION DOCUMENTS / BID SET

DATE
01/23/2012

DRAWING NO. **6693**

SHEET OF SHEETS

SHEET TITLE
MECHANICAL UNIT SCHEDULES

SHEET NO.
M1.0

SHEET NOTES

1. SUPPLY AIR DUCT DOWN TO AIR PLENUM LEVEL
2. SUPPLY AIR DUCT UP TO RTU ON ROOF
3. RETURN AIR DUCT UP TO RTU ON ROOF
4. EXHAUST AIR DUCT UP TO EXHAUST FAN ON ROOF

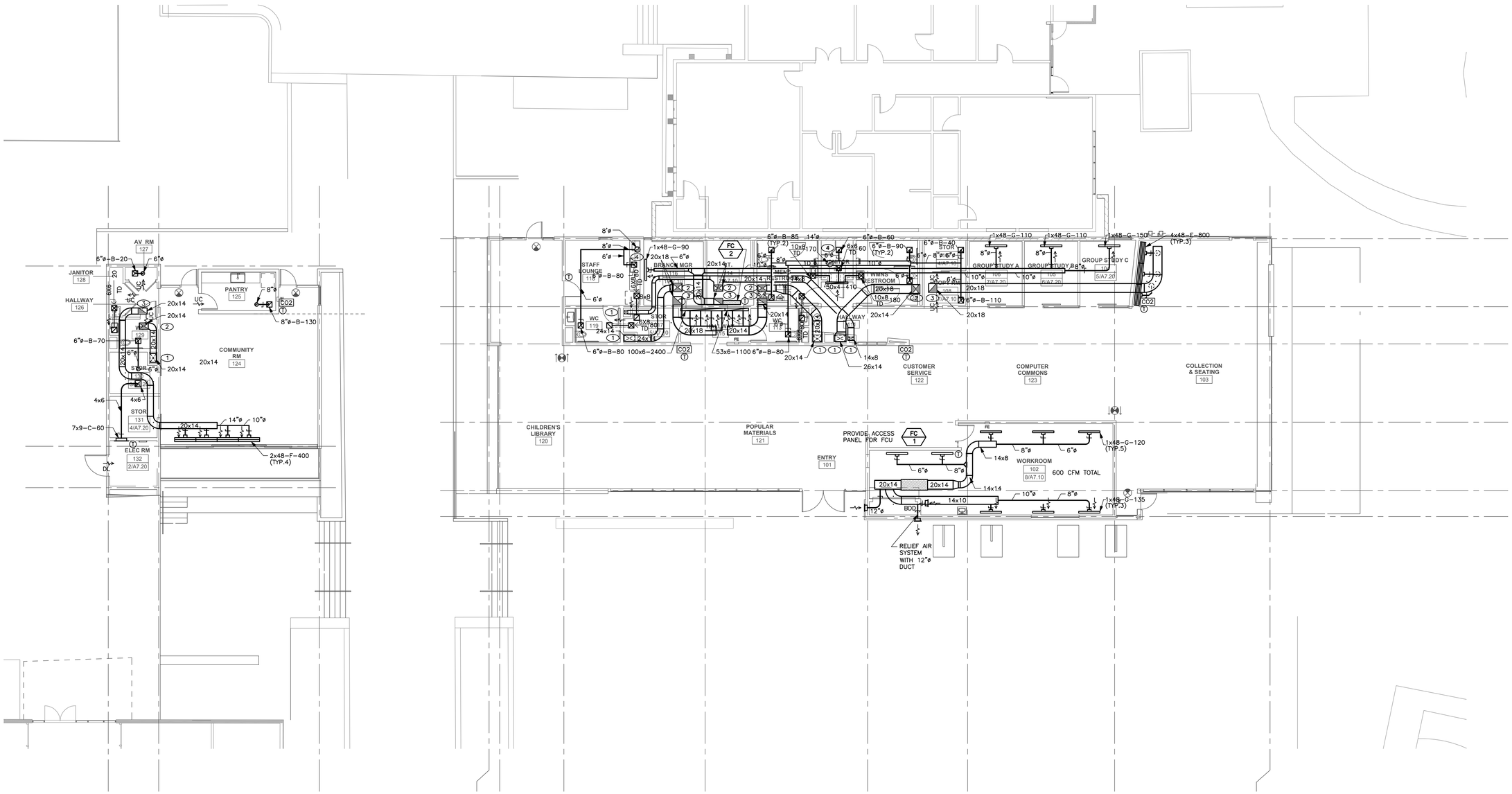

1 **MECHANICAL FLOOR PLAN**
SCALE: 1/8"=1'-0"

0 4' 8' 16'

PICO BRANCH LIBRARY

2201 Pico Blvd.
Santa Monica, CA 90404

PROJECT

KoningEizenbergArchitecture
1454 25th St, Santa Monica, CA 90404

310.828.6131 info@kearch.com
310.828.0719 fax www.kearch.com

ARCHITECT'S PROJECT NO.
1001

ARCHITECT

All designs, ideas, arrangements and plans indicated by these drawings are the property and copyright of the Architect and shall neither be used on any other work nor be disclosed to any other person for any use whatsoever without written permission.

Koning Eizenberg Architecture and/or its principals and employees waives any and all liability or responsibility for problems that may occur when these plans, drawings, specifications, and/or designs are followed without the professional's guidance with ambiguities, or conflicts which are alleged.

REGISTERED PROFESSIONAL ENGINEER
HENRY Y. LAM
No. M33781
Exp. 06-30-13
MECHANICAL
STATE OF CALIFORNIA

GLUMAC
617 W. 7th Street, Suite 500
Los Angeles, CA 90017
T. 213.239.8866 F. 213.239.8816
www.glumac.com
Job No.:
Contact:

engineers for a sustainable future™

CONSULTANT

City of Santa Monica
Architecture Services

1437 4TH STREET, SUITE 300
SANTA MONICA, CA 90401
TEL. (310) 458-2205
FAX. (310) 399-1541
architecture@smgov.net

SUBMITTED BY : DATE : _____ 20 __

APPROVED BY : DATE : _____ 20 __
Miriam Mulder,
Architecture Services Manager

CITY OF SANTA MONICA
DEPARTMENT OF PUBLIC WORKS

REVIEWED BY : DATE : _____ 20 __

REVIEWED BY : DATE : _____ 20 __

REVIEWED BY : DATE : _____ 20 __

CITY CLIENT

NO.	DATE	BY	DESCRIPTION

REVISIONS

ISSUE
65% CONSTRUCTION DOCUMENTS / BID SET

DATE
01/23/2012

DRAWING NO. **6693**

SHEET OF SHEETS

SHEET TITLE
MECHANICAL FLOOR PLAN

SHEET NO.
M2.0

SHEET OF

DWG NO. -

TITLE OF PROJECT

SHEET NOTES

1. SUPPLY AIR DUCT UP TO CEILING LEVEL
2. TEMPERATURE CONTROL ZONING
   EACH ZONE IS SERVED BY INDIVIDUAL ROOFTOP UNIT. ZONING UNDERFLOOR SUPPLY AIR PLENUM MUST BE AIRTIGHT.

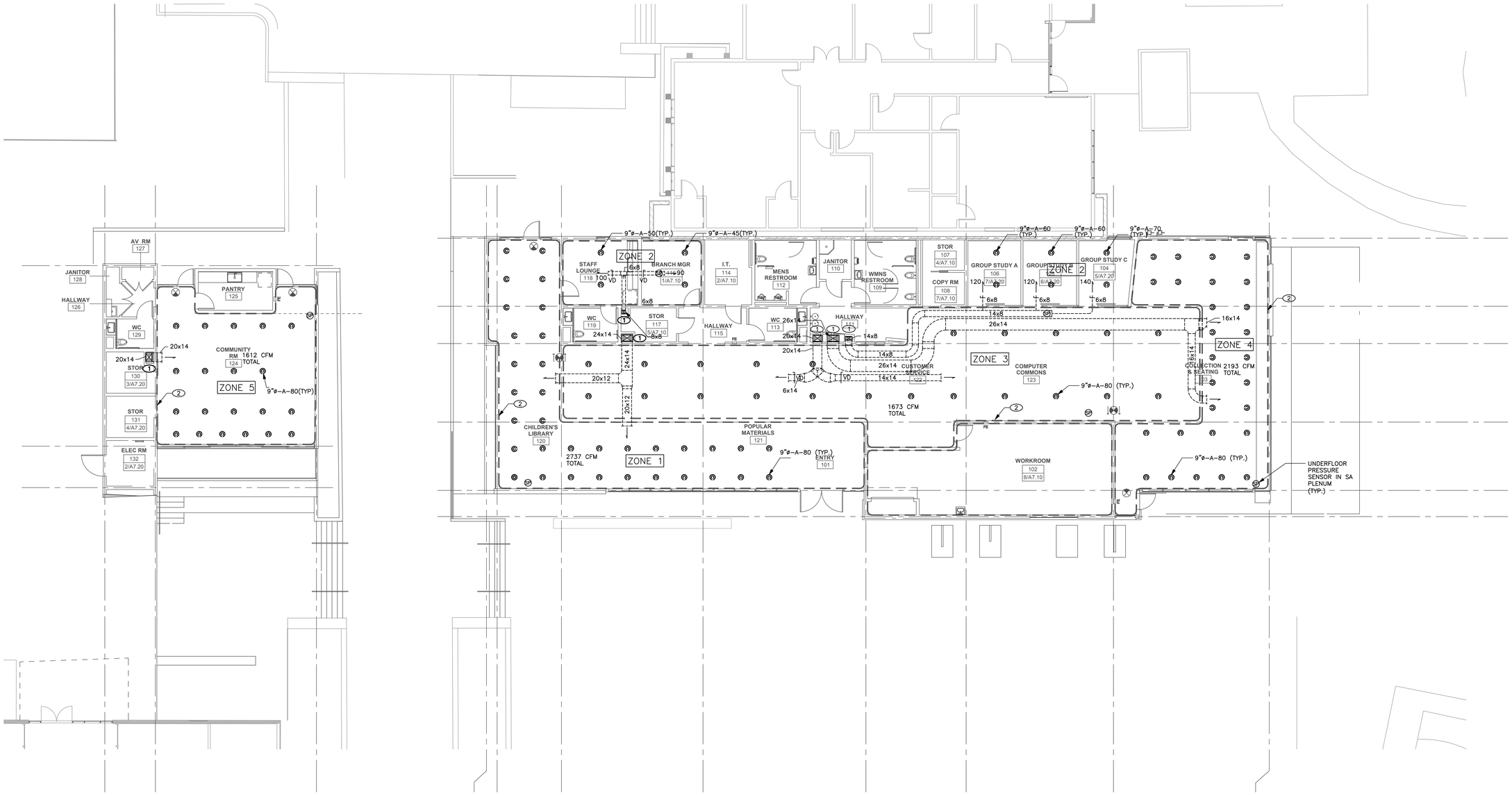

1 **MECHANICAL FLOOR PLAN (UNDERFLOOR)**
SCALE: 1/8"=1'–0"

0 4' 8' 16'

PICO BRANCH LIBRARY

2201 Pico Blvd.
Santa Monica, CA 90404

PROJECT

KoningEizenbergArchitecture
1454 25th St, Santa Monica, CA 90404

310.828.6131 info@kearch.com
310.828.0719 fax www.kearch.com

ARCHITECT'S PROJECT NO.
1001

ARCHITECT

All designs, ideas, arrangements and plans indicated by these drawings are the property and copyright of the Architect and shall neither be used on any other work nor be disclosed to any other person for any use whatsoever without written permission.

Koning Eizenberg Architecture and/or its principals and employees waives any and all liability or responsibility for problems that may occur when these plans, drawings, specifications, and/or designs are followed without the professional's guidance with ambiguities, or conflicts which are alleged.

REGISTERED PROFESSIONAL ENGINEER
HENRY Y. LAM
No. M33781
Exp. 06-30-13
MECHANICAL
STATE OF CALIFORNIA

GLUMAC
617 W. 7th Street, Suite 500
Los Angeles, CA 90017
T. 213.239.8866 F. 213.239.8816
www.glumac.com
Job No.:
Contact:

engineers for a sustainable future™

CONSULTANT

City of Santa Monica Architecture Services
1437 4TH STREET, SUITE 300
SANTA MONICA, CA 90401
TEL. (310) 458-2205
FAX. (310) 399-1541
architecture@smgov.net

DATE : 20
SUBMITTED BY :

DATE : 20
APPROVED BY :
Miriam Mulder,
Architecture Services Manager

CITY OF SANTA MONICA
DEPARTMENT OF PUBLIC WORKS

REVIEWED BY : DATE : 20

REVIEWED BY : DATE : 20

REVIEWED BY : DATE : 20

CITY CLIENT

NO.	DATE	BY	DESCRIPTION

REVISIONS

ISSUE
65% CONSTRUCTION DOCUMENTS / BID SET

DATE
01/23/2012

DRAWING NO. **6693**

SHEET OF SHEETS

SHEET TITLE
MECHANICAL FLOOR PLAN (UNDERFLOOR)

SHEET NO.
M2.0A

SHEET OF

DWG NO. -

TITLE OF PROJECT

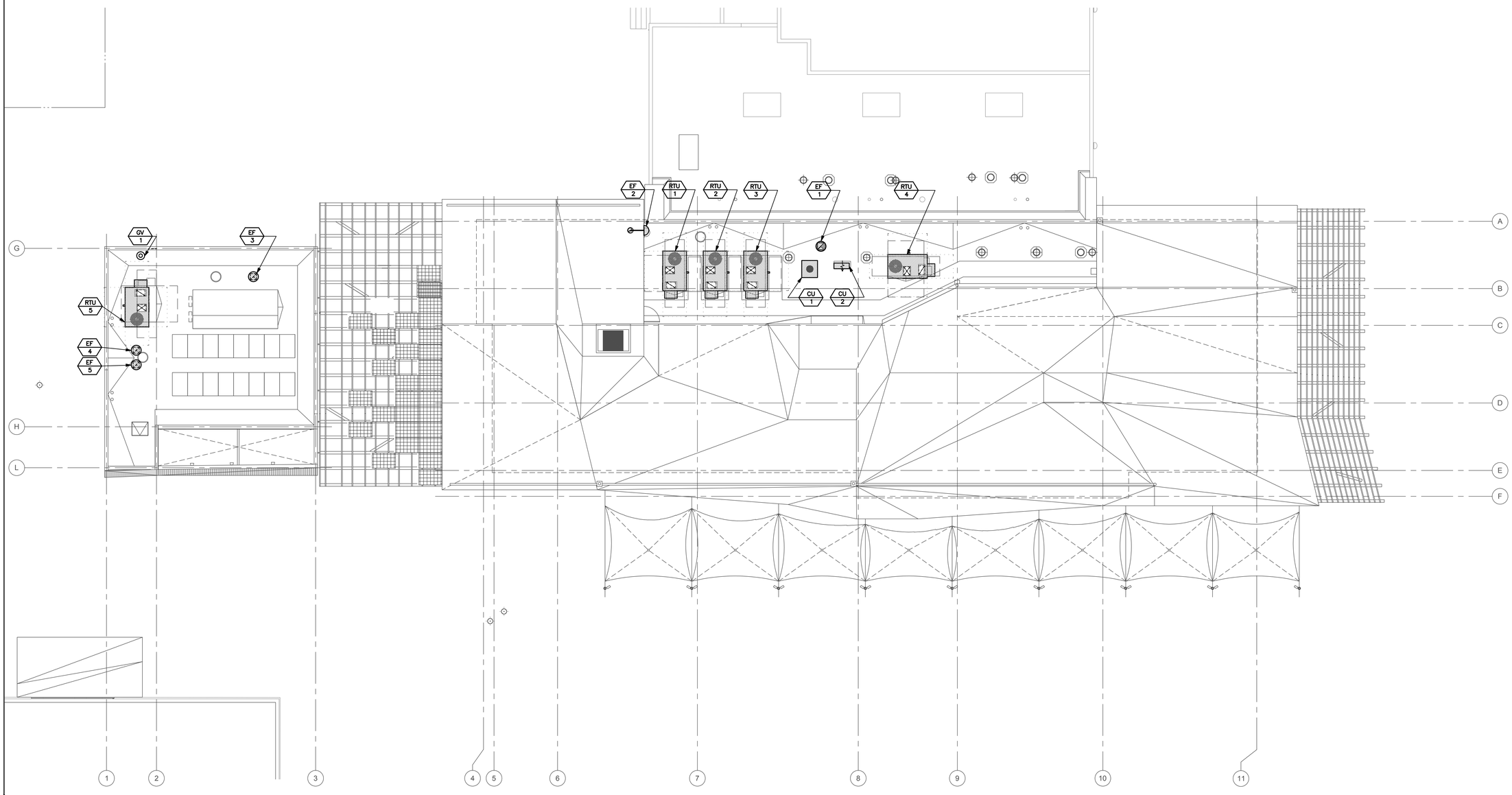

1 **MECHANICAL ROOF PLAN**
SCALE: 1/8"=1'-0"

0 4' 8' 16'

SHEET OF

DWG NO. -

TITLE OF PROJECT:

PICO BRANCH LIBRARY

2201 Pico Blvd.
Santa Monica, CA 90404

PROJECT

KoningEizenbergArchitecture
1454 25th St, Santa Monica, CA 90404

310.828.6131 info@kearch.com
310.828.0719 fax www.kearch.com

ARCHITECT'S PROJECT NO.
1001

ARCHITECT

All designs, ideas, arrangements and plans indicated by these drawings are the property and copyright of the Architect and shall neither be used on any other work nor be disclosed to any other person for any use whatsoever without written permission.

Koning Eizenberg Architecture and/or its principals and employees waives any and all liability or responsibility for problems that may occur when these plans, drawings, specifications, and/or designs are followed without the professional's guidance with ambiguities, or conflicts which are alleged.

REGISTERED PROFESSIONAL ENGINEER
HENRY Y. LAM
No. M33781
Exp. 06-30-13
MECHANICAL
STATE OF CALIFORNIA

GLUMAC
617 W. 7th Street, Suite 500
Los Angeles, CA 90017
T. 213.239.8866 F. 213.239.8816
www.glumac.com
Job No.:
Contact:
engineers for a sustainable future™

CONSULTANT

City of Santa Monica
Architecture Services
1437 4TH STREET, SUITE 300
SANTA MONICA, CA 90401
TEL. (310) 458-2205
FAX. (310) 399-1541
architecture@smgov.net

SUBMITTED BY : DATE : 20

APPROVED BY : DATE : 20
Miriam Mulder,
Architecture Services Manager

CITY OF SANTA MONICA
DEPARTMENT OF PUBLIC WORKS

REVIEWED BY : DATE : 20

REVIEWED BY : DATE : 20

REVIEWED BY : DATE : 20

CITY CLIENT

NO.	DATE	BY	DESCRIPTION

REVISIONS

ISSUE
65% CONSTRUCTION DOCUMENTS / BID SET

DATE
01/23/2012

DRAWING NO. **6693**

SHEET OF SHEETS

SHEET TITLE
MECHANICAL ROOF PLAN

SHEET NO.
M2.1

DUCT FITTING LEGEND

SINGLE LINE	DOUBLE LINE ROUND DUCT	DOUBLE LINE RECTANGULAR DUCT	DESCRIPTION
	R=1.5W	W/SINGLE THICKNESS TURNING VANES R=1.5W	90° ELL
			45° ELL
			REDUCER
		N/A	45° TEE
	N/A		45° – 90° TEE
		N/A	CONICAL 90° TEE
		N/A	CONNECTION BETWEEN RIGID AND FLEXIBLE DUCT
			Y–FITTING
			ACOUSTICALLY LINED DUCT
			SQUARE TO ROUND TRANSITION

1 DUCT FITTING LEGEND

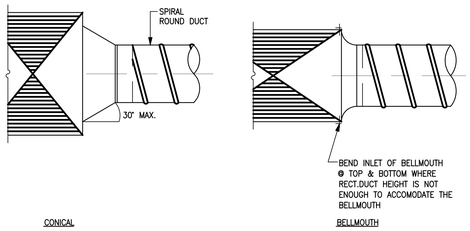

NOTES:

1. SECURE ALL CONNECTIONS TO COMPLY WITH THE REQUIREMENTS OF THE PRESSURE CLASS SPECIFIED.
2. SUPPLY ROUND DUCT TAKE–OFF IS SHOWN. RETURN/EXHAUST SIMILAR.

2 ROUND DUCT TAKE-OFF CONN. TO RECTANGULAR DUCT

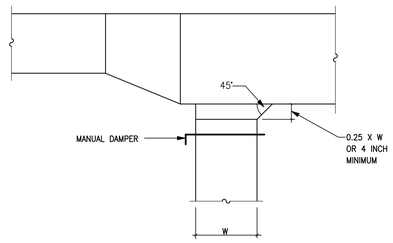

3 45 DEG. ENTRY BRANCH TAKE-OFF

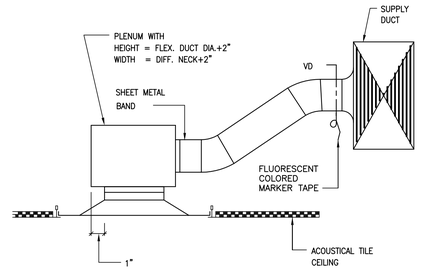

NOTES:

1. ACOUSTICAL TILE CEILING SHOWN. GYP. BOARD CEILING SIMILAR.
2. USE THIS DETAIL FOR TIGHT CEILING SPACE WHERE TOP CONNECTION AT DIFFUSER OR GRILLE CANNOT BE ACHIEVED.

4 DIFFUSER SIDE CONNECTION

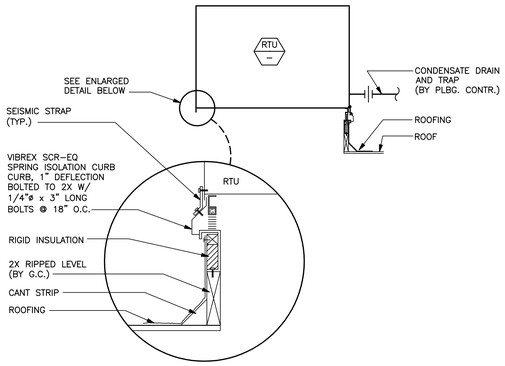

5 ROOFTOP UNIT MOUNTING DETAIL

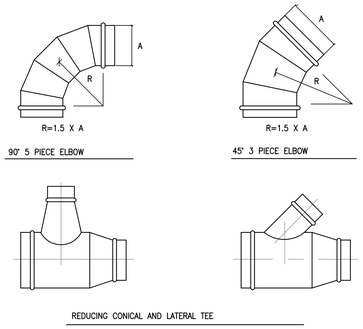

6 ROUND DUCT FITTINGS

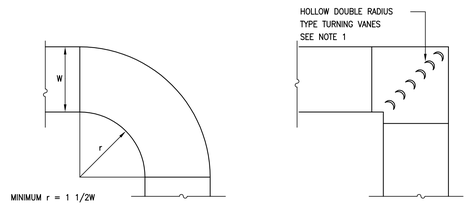

NOTE 1 : FOR DUCT WIDTH LESS THAN 18" USE MINIMUM 26 GA VANES AT 2–1/8" O.C. FOR DUCT 18" AND WIDER, USE MINIMUM 24 GA VANES AT 3–1/4" O.C.

2. FOR VANES WITH 2 1/2" O.C. PROVIDE INNER VANE RADIUS OF 2 INCHES. FOR VANES 3 1/2" O.C. PROVIDE INNER RADIUS OF 4 1/2 INCHES.

7 RETANGULAR DUCT ELBOWS

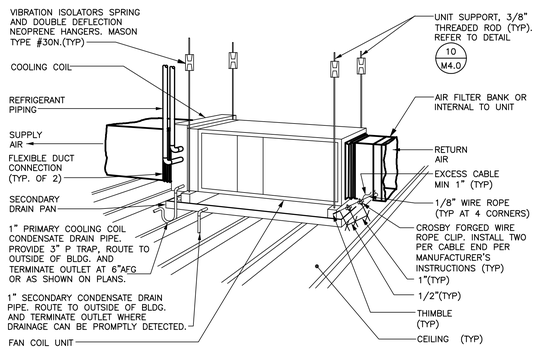

8 SUSPENDED FAN COIL UNIT

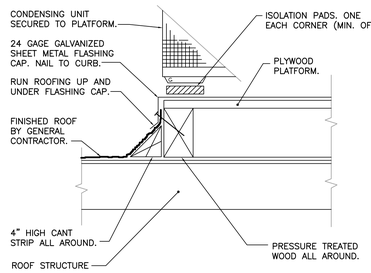

NOTE: SEE STRUCTURAL PLANS FOR PLATFORM DETAIL.

9 ROOF MOUNTED CONDENSING UNIT

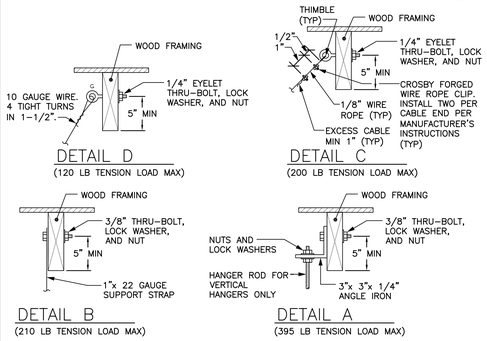

NOTE:
SEE SMACNA SEISMIC RESTRAINT MANUAL FIGURE 8–15 AND TABLE 8–1.

10 WOOD UPPER ATTACHMENTS

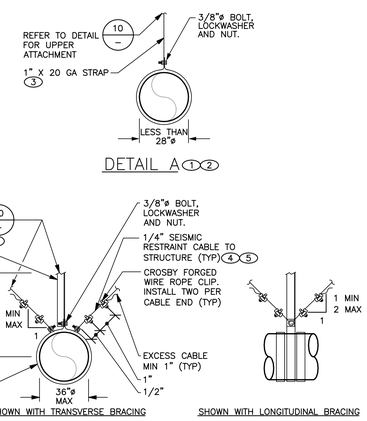

NOTES:

1. HANGERS SHALL BE INSTALLED AT EVERY CHANGE OF DIRECTION AND NO MORE THAN 10'–0" APART.
2. PROVIDE A FLEXIBLE CONNECTION BETWEEN MECHANICAL EQUIPMENT AND DUCT.
3. STRAP MAY BE REDUCED TO 1" X 22GA FOR DUCT 24"ø AND LESS IN DIAMETER.
4. SEISMIC RESTRAINT CABLES MAY BE OMITTED WHERE DUCT IS SUPPORTED WITHIN 12" OF STRUCTURE AS MEASURED FROM THE TOP OF DUCT TO THE BOTTOM OF STRUCTURE.
5. WHERE SEISMIC CABLE RESTRAINTS ARE REQUIRED,
   A. PROVIDE SEISMIC CABLE TRANSVERSE BRACING AT 30 FT AND
   B. SEISMIC CABLE LONGITUDINAL BRACING AT 60 FT.
   C. SEISMIC CABLE RESTRAINTS ARE NOT REQUIRED AT EVERY HANGER LOCATION.
6. VERTICAL HANGERS, DIAGONAL AND HORIZONTAL BRACES TO BE SIZED IN ACCORDANCE WITH SMACNA SEISMIC RESTRAINT MANUAL TABLE 5–6.
7. SIZE ANCHORS IN ACCORDANCE WITH SMACNA SEISMIC RESTRAINT MANUAL TABLE 8–1, TYPE C FOR CONCRETE AND TYPE A FOR ALL OTHERS.

14 ROUND DUCT SUPPORT

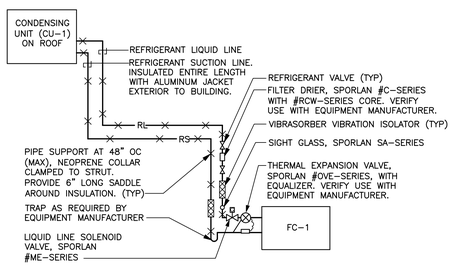

NOTE: SIZE REFRIGERANT PIPING PER MANUFACTURER'S RECOMMENDATIONS.

11 REFRIGERANT PIPING SCHEMATIC

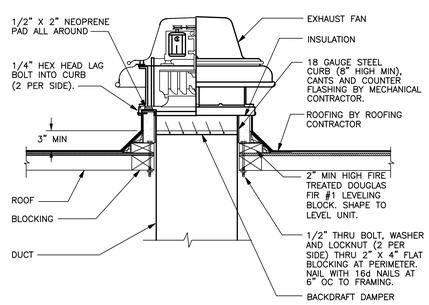

NOTE: REFER TO ARCHITECTURAL PLANS FOR ADDITIONAL INFORMATION.

12 ROOF EXHAUST FAN

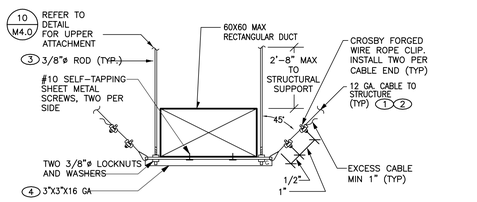

NOTES:

1. SEISMIC RESTRAINT CABLES MAY BE OMITTED WHERE:
   A. THERE IS A FLEXIBLE CONNECTION BETWEEN THE MECHANICAL EQUIPMENT AND
   B. RECTANGULAR DUCT IS LESS THAN 6 SQUARE FEET IN AREA OR
   C. DUCT OF ANY SIZE IS SUPPORTED WITHIN 12" OF STRUCTURE AS MEASURED FROM THE TOP OF DUCT TO THE BOTTOM OF STRUCTURE.
2. WHERE SEISMIC RESTRAINTS ARE REQUIRED,
   A. PROVIDE TRANSVERSE BRACING AT 30 FT AND
   B. LONGITUDINAL BRACING AT 60 FT.
3. VERTICAL HANGERS, DIAGONAL AND HORIZONTAL BRACES TO BE SIZED IN ACCORDANCE WITH SMACNA SEISMIC RESTRAINT MANUAL TABLE 5–1 AND 5–2.

13 RECTANGULAR DUCT SUPPORT

PICO BRANCH LIBRARY

2201 Pico Blvd.
Santa Monica, CA 90404

PROJECT

KoningEizenbergArchitecture
1454 25th St, Santa Monica, CA 90404
310.828.6131 info@kearch.com
310.828.0719 fax www.kearch.com

ARCHITECT'S PROJECT NO.
1001

ARCHITECT

All designs, ideas, arrangements and plans indicated by these drawings are the property and copyright of the Architect and shall neither be used on any other work nor be disclosed to any other person for any use whatsoever without written permission.

Koning Eizenberg Architecture and/or its principals and employees waives any and all liability or responsibility for problems that may occur when these plans, drawings, specifications, and/or designs are followed without the professional's guidance with ambiguities, or conflicts which are alleged.

REGISTERED PROFESSIONAL ENGINEER
HENRY Y. LAM
No. M33781
Exp. 06–30–13
MECHANICAL
STATE OF CALIFORNIA

GLUMAC
617 W. 7th Street, Suite 500
Los Angeles, CA 90017
T. 213.239.8866 F. 213.239.8816
www.glumac.com
Job No.:
Contact:
engineers for a sustainable future™

CONSULTANT

City of Santa Monica Architecture Services
1437 4TH STREET, SUITE 300
SANTA MONICA, CA 90401
TEL. (310) 458-2205
FAX. (310) 399-1541
architecture@smgov.net

SUBMITTED BY : DATE : 20

APPROVED BY : Miriam Mulder, Architecture Services Manager — CITY OF SANTA MONICA DEPARTMENT OF PUBLIC WORKS — DATE : 20

REVIEWED BY : DATE : 20

REVIEWED BY : DATE : 20

REVIEWED BY : DATE : 20

CITY CLIENT

NO.	DATE	BY	DESCRIPTION

REVISIONS

ISSUE
65% CONSTRUCTION DOCUMENTS / BID SET

DATE
01/23/2012

DRAWING NO. **6693**

SHEET OF SHEETS

SHEET TITLE
MECHANICAL DETAILS

SHEET NO.
M4.0

SHEET OF

DWG NO. -

TITLE OF PROJECT

PLUMBING LEGEND

SYMBOL	DESCRIPTION
	BALL VALVE
	BUTTERFLY VALVE
	GATE VALVE
	ANGLE GATE VALVE
	OS & Y GATE VALVE
TS TS	OS & Y GATE VALVE WITH TAMPER SWITCH
S	SOLENOIDE VALVE
	LUBRICATED PLUG VALVE
	CHECK VALVE
	PRESSURE REDUCING VALVE
	RELIEF VALVE
	VACUUM RELIEF VALVE
	PRESSURE & TEMPERATURE RELIEF VALVE
	AUTOMATIC AIR VENT
	CIRCUIT SETTER
	BACKWATER VALVE
DDCV	DOUBLE DETECTOR CHECK VALVE ASSEMBLY
DCV	DOUBLE CHECK VALVE ASSEMBLY
RPBFP	REDUCED PRESSURE BACKFLOW PREVENTER
PS	PRESSURE SWITCH
FA	FLOW ALARM
FS	FLOW SWITCH
	UNION
	STRAINER
	STRAINER WITH BLOW OFF
	PIPE ANCHOR
	PIPE ALIGNMENT GUIDE
	EXPANSION JOINT
	FLEXIBLE CONNECTOR
	CAP OR PLUG
	BLIND FLANGE
	CONCENTRIC REDUCER
	ECCENTRIC REDUCER
	AQUASTAT
WHA	WATER HAMMER
PG	PRESSURE GAUGE WITH COCK
T	THERMOMETER
CO	CLEANOUT PLUG
FCO	FLOOR CLEANOUT
YCO	YARD CLEANOUT
TT	TEST TEE
WH	WALL HYDRANT
HB	HOSE BIBB
YH	YARD HYDRANT
	THRUST BLOCK
FDC	FIRE DEPARTMENT CONNECTION
	FIRE RISER
FDV	FIRE DEPARTMENT VALVE
	FIRE DEPARTMENT VALVE CABINET
	SIEMESE FIRE DEPT. CONN.
	FIRE ALARM BELL
FD	FLOOR DRAIN
FS	FLOOR SINK
	HUB DRAIN
	FIRE RISER

SYMBOL	DESCRIPTION
	DIRECTION OF SLOPE
	DIRECTION OF FLOW
	PIPE UP
	PIPE DOWN
	PIPE DROP
	TOP CONNECTION – BRANCH LINE
	BOTTOM CONNECTION – BRANCH LINE
F	FIRE MAIN
AS	AUTOMATIC WET SPRINKLER
-	COLD WATER
- -	HOT WATER (120°F)
- - -	HOT WATER CIRC (120°F)
- - 140	HOT WATER (140°F)
- - - 140	HOT WATER CIRC (140°F)
SAN	SANITARY SEWER
SD	STORM DRAIN
	PIPING BELOW GRADE
	WASTE
	VENT
RD	ROOF DRAIN PIPING
OD	OVERFLOW DRAIN PIPING
PD	PUMPED DISCHARGE
D	INDIRECT DRAIN LINE
IW	INDUSTRIAL WASTE
GW	GREASY WASTE
G	NATURAL GAS (7"W.C.)
MG	MEDIUM PRESSURE GAS (2#)
CA	PROCESS COMPRESSED AIR
(E)	EXISTING PIPE
	PIPING TO BE REMOVED
W	WASTE STACK
V	VENT STACKS
CW	COLD WATER RISER
HW	HOT WATER RISER
HWC	HOT WATER RECIRC. RISER
G	NATURAL GAS RISER
RD	RAINWATER LEADER
OD	OVERFLOW DRAIN LEADER
CA	COMPRESSED AIR RISER
AS	AUTOMATIC WET SPRINKLER RISER
ASD	AUTOMATIC SPRINKLER DRAIN
WSP	WET STANDPIPE RISER
	PLUMBING EQUIPMENT
	MISCELLANEOUS EQUIPMENT
#	SHEET NOTE

ABBREVIATIONS

⌀	SQUARE FEET
	POINT OF CONNECTION
&	AND
@	AT
#	POUNDS
#	NUMBER
/	PER
ABV	ABOVE
ADA	AMERICANS WITH DISABILITIES ACT
AFF	ABOVE FINISHED FLOOR
AFG	ABOVE FINISHED GRADE
AP	ACCESS PANEL
ARCH	ARCHITECT
AS	AUTOMATIC FIRE SPRINKLER SYSTEM
BEL	BELOW
BFV	BUTTERFLY VALVE
BHP	BRAKE HORSEPOWER
BTU	BRITISH THERMAL UNIT
BV	BALL VALVE
BWV	BACKWATER VALVE
CA	COMPRESSED AIR
CD	CONDENSATE DRAIN
CFF	CAP FOR FUTURE
CFH	CUBIC FEET PER HOUR
CFM	CUBIC FEET PER MINUTE
CFS	CUBIC FEET PER SECOND
CI	CAST IRON
CLG	CEILING
CO	CLEANOUT
CONC	CONCRETE
CONTR	CONTRACTOR
CONT	CONTINUATION
CS	CIRCUIT SETTER
CV	CHECK VALVE
CW	COLD WATER
CWFU	COLD WATER FIXTURE UNIT
DN	DOWN
DCVA	DOUBLE CHECK VALVE ASSEMBLY
DDCVA	DOUBLE DETECTOR CHECK VALVE ASSEMBLY
DFU	DRAINAGE FIXTURE UNIT
HWC	HOT WATER CIRC
DIA	DIAMETER
DSN	DOWNSPOUT NOZZLE
D	DRAIN
DSP	DRY STANDPIPE SYSTEM
DWV	DRAINAGE WASTE AND VENT
EXIST	EXISTING
ELEC	ELECTRICAL
FA	FLOW ALARM
FC	FLEXIBLE CONNECTION
FCO	FLOOR CLEANOUT
FDC	FIRE DEPARTMENT CONNECTION
FDVC	FIRE DEPARTMENT VALVE CABINET
FH	FIRE HYDRANT
FIN	FINISHED
FL	FLOOR
FM	FROM
FO	FUEL OIL
FPS	FEET PER SECOND
FT	FEET
FU	FIXTURE UNIT
G	GAS
GD	GARBAGE DISPOSER
GPH	GALLONS PER HOUR
GPM	GALLONS PER MINUTE
GV	GATE VALVE
HD	HUB DRAIN
HP	HORSEPOWER
HW	HOT WATER
HWFU	HOT WATER FIXTURE UNIT
IAPMO	INTERNATIONAL ASSOCIATION OF PLUMBING AND PLUMBING OFFICIALS
ICBO	INTERNATIONAL CONFERENCE OF BUILDING OFFICIALS
I.E.	INVERT ELEVATION
LBS	POUNDS (UNIT OF FORCE)
LPV	LUBRICATED PLUG VALVE
MAX	MAXIMUM
MBH	THOUSANDS BTU/HR
MECH	PLUMBING
MFG	MANUFACTURER
MIN	MINIMUM
MH	MANHOLE
N.C.	NORMALLY CLOSED
NFPA	NATIONAL FIRE PROTECTION ASSOCIATION
NO.	NUMBER
N.O.	NORMALLY OPEN
NIC	NOT IN CONTRACT
OFCI	OWNER FURNISHED CONTRACTOR INSTALLED
OW	OIL WASTE
POC	POINT OF CONNECTION
PLBG	PLUMBING
PS	PRESSURE SWITCH
PSI	POUNDS PER SQUARE INCH
PT	PRESSURE TEMPERATURE TRAP (PETE'S PLUG)
PV	PLUG VALVE
R,I,&C	ROUGH IN AND CONNECT
RPBFP	REDUCED PRESSURE PRINCIPLE BACKFLOW PREVENTER
RPM	REVOLUTIONS PER MINUTE
SF	SQUARE FEET
SHT	SHEET
SN	SHEET NOTE
SOPSC	STATE OF PLUMBING SPECIALTY CODE
SOSSC	STATE OF STRUCTURAL SPECIALITY CODE
SOV	SHUT–OFF VALVE
SPKR	SPRINKLER
TB	THRUST BLOCK
TMV	THERMOSTATIC MIXING VALVE
TP	TRAP PRIMER
TS	TAMPER SWITCH
TT	TEST TEE
TYP	TYPICAL
UN	UNION
VB	VACUUM BREAKER
V	VENT
V	VOLTS
VTR	VENT THROUGH ROOF
W	WASTE
WCO	WALL CLEANOUT
W/	WITH
WGT	WEIGHT
WSP	WET STANDPIPE
YB	YARD BOX

PLUMBING DRAWING LIST

P.01 PLUMBING LEAD SHEET
P.02 PLUMBING SCHEDULES
P2.0 PLUMBING PLAN ENLARGED
P2.1 PLUMBING PLANS
P2.2 PLUMBING ROOF PLAN

PICO BRANCH LIBRARY

2201 Pico Blvd.
Santa Monica, CA 90404

PROJECT

KoningEizenberg Architecture
1454 25th St, Santa Monica, CA 90404
310.828.6131 info@kearch.com
310.828.0719 fax www.kearch.com

ARCHITECT'S PROJECT NO.
1001

ARCHITECT

All designs, ideas, arrangements and plans indicated by these drawings are the property and copyright of the Architect and shall neither be used on any other work nor be disclosed to any other person for any use whatsoever without written permission.

Koning Eizenberg Architecture and/or its principals and employees waives any and all liability or responsibility for problems that may occur when these plans, drawings, specifications, and/or designs are followed without the professional's guidance with ambiguities, or conflicts which are alleged.

REGISTERED PROFESSIONAL ENGINEER
HENRY Y. LAM
No. M33781
Exp. 06-30-13
MECHANICAL
STATE OF CALIFORNIA

GLUMAC
617 W. 7th Street, Suite 500
Los Angeles, CA 90017
T. 213.239.8866 F. 213.239.8816
www.glumac.com
Job No.:
Contact:
engineers for a sustainable future™

CONSULTANT

City of Santa Monica
Architecture Services
1437 4TH STREET, SUITE 300
SANTA MONICA, CA 90401
TEL. (310) 458-2205
FAX. (310) 399-1541
architecture@smgov.net

DATE: _____ 20__
SUBMITTED BY:

DATE: _____ 20__
APPROVED BY:
Miriam Mulder,
Architecture Services Manager

CITY OF SANTA MONICA
DEPARTMENT OF PUBLIC WORKS

REVIEWED BY: DATE: _____ 20__

REVIEWED BY: DATE: _____ 20__

REVIEWED BY: DATE: _____ 20__

CITY CLIENT

NO.	DATE	BY	DESCRIPTION

REVISIONS

ISSUE
65% CONSTRUCTION DOCUMENTS / BID SET

DATE
01/23/2012

DRAWING NO. **6693**

SHEET OF SHEETS

SHEET TITLE
PLUMBING LEAD SHEET

SHEET NO.
P0.1

SHEET OF

DWG. NO. -

TITLE OF PROJECT:

PLUMBING FIXTURES SCHEDULE

ITEM	DESCRIPTION	TRAP ARM	WASTE	VENT	CW	HW	REMARKS
WC-1	WATER CLOSET 1.28 GPF, FT	INT	4"	2"	1-1/2"	---	"AMERICAN STANDARD" MODEL # 3351.128 "AFWALL" ELONGATED WALL MOUNT, 1.28 GPF TOILET WITH "SLOAN" ROYAL MODEL #111-1.28 HIGH-EFFICIENCY MANUAL FLUSHOMETER VALVE, 1.28 GPF, OLSONITE #95 OPEN FRONT ONSONITE #95CC-SS SEAT LESS COVER
WC-2	WATER CLOSET 1.28 GPF - FT - ADA	INT	4"	2"	1-1/2"	---	"AMERICAN STANDARD" MODEL # 3351.128 "AFWALL" ELONGATED WALL MOUNT, 1.28 GPF TOILET WITH "SLOAN" ROYAL MODEL #111-1.28 HIGH-EFFICIENCY MANUAL FLUSHOMETER VALVE, 1.28 GPF, OLSONITE #95 OPEN FRONT ONSONITE #95CC-SS SEAT LESS COVER
U-1	URINAL 1.28 GPF - FT - ADA	INT	2"	2"	1-1/2"	---	"SLOAN" #WES-1000.1001-0.13 WALL HUNG HEU URINAL, WITH "SLOAN" MODEL # WEUS-1000.1201-0.13 SOLIS, SOLAR POWERED HEU FLUSHOMETER.
L-1	LAVATORY ADA	1¼"	2"	1½"	½"	½"	"AMERICAN STANDARD" 0356.028 "LUCERNE" VITREOUS CHINA, WALL HUNG, 8" CENTERS. FAUCET: 0.5 GPM. STOPS BRASSCRAFT #ST-CR19 W/ BC #5130 SUPPLIES. ADA COMPLIANCE.
L-2	LAVATORY ADA	1¼"	1½"	1½"	½"	½"	"KOHLER" LADENA MODEL #K2215 VITREOUS CHINA, WITH OVERFLOW WALL HUNG, 8" CENTERS. FAUCET: SLOAN SOLIS 0.5 GPM. STOPS BRASSCRAFT #ST-CR19 W/ BC #5130 SUPPLIES. ADA COMPLIANCE.
SS-1	SERVICE SINK	3"	3"	2"	¾"	¾"	"FLOORSTONE", MODEL # 80. FAUCET: "JUST" #JVB-1200, WALL MOUNT, VACUUM BREAKER SPOUT W/ PAIL HOOK AND WALL BRACE AND 3/4" MALE THREADED OUTLET.
S-1	SINK	2"	2"	2"	¾"	¾"	"ELKAY" UNDERCOUNTER KITCHEN SINK MODEL#PSRSQ3322 FAUCET: GROHE, MINTA #32319 DUAL SPRAY PULL DOWN.
S-2	SINK	2"	2"	2"	¾"	¾"	"JUST" MODEL # HCL-23520-S WALL MOUNTED SINK. WITH SENSOR OPERATED FAUCET. ADA COMPLIANT. FAUCET: "JUST" MODEL # JSGN-AAC SENSOR OPERATED FAUCET WITH CONTROL MODULE.
FD-1	FLOOR DRAIN	2"/3"	2"/3"	1½"	---	---	"J.R. SMITH" 2005(-SS) WITH TRAP PRIMER CONNECTION. TRAP PRIMER MAY BE PROVIDED BY A FLUSH VALVE ATTACHEMENT OR A "PPP" PR-500 RECESSED IN WALL BEHIND ACCESS PANEL WITH A 1/2" BALL VALVE PRECEEDING THE TRAP PRIMER, BOTH BEHIND ONE ACCESS PANEL.
EWC-1	ELECTRIC WATER COOLER	2"	2"	2"	½"	-	"HAWS" #1011, "HI-LO" BARRIER FREE DUAL HEIGHT, WALL MOUNTED, 18 GAUGE, TYPE 304 STAINLESS STEEL, PUSH-BUTTON VALVES FRONT ACCESSIBLE S/S BACK PANEL AND LOUVERED GRILL WITH #6426 IN-LINE FILTER. 120 VOLT.
TP-1	PRESSURE DROP TRAP PRIMER	---	---	---	½"	---	PPP #P-2, COPPER BODY COMPLETE 1/2" COPPER TYPE "L" PIPE TO RECECPTOR(S). INSTALL PER MANUF. RECOMMENDATIONS AND PROVIDE ACCESS PANEL
HB-1	HOSE BIBB	---	---	---	3/4"	---	ACORN NO. 8121, WALL MOUNTED WITH VACUUM BREAKER.

GAS WATER HEATER SCHEDULE

ITEM	LOCATION	SERVICE	TYPE	HOT WATER CAPACITY AT 60°F	BTU/HR INPUT	ELECTRICAL DATA VOLT	ELECTRICAL DATA HZ	MANUFACTURER & MODEL NO.	OPERATING WEIGHT LBS.	REMARKS
GWH 1	ROOF	DOMESTIC HOT WATER	TANKLESS/ OUTDOOR	4.8 GPM	199,000	120	60	NORITZ NC 199-OD	110	23.6"(HEIGHT) X 13.8"(WIDTH) X 10.6"(DEPTH), SC-201-6M MULTI-SYSTEM CONTROLLER (SINGLE MANIFOLD), 120 VAC.
GWH 2	ROOF	DOMESTIC HOT WATER	TANKLESS/ OUTDOOR	4.8 GPM	199,000	120	60	NORITZ NC199-OD	110	23.6"(HEIGHT) X 13.8"(WIDTH) X 10.6"(DEPTH), SC-201-6M MULTI-SYSTEM CONTROLLER (SINGLE MANIFOLD), 120 VAC.

PUMP SCHEDULE

ITEM	SERVICE	MANUFACTURER AND MODEL	TYPE	CAPACITY GPM	CAPACITY HEAD, FT	HP	RPM	VOLTS	PHASE	WGT	REMARKS
CPR 1	HOT WATER GWH-1	B&G SERIES PR	INLINE	5	15	1/6	1750	120	1	50	INLINE CIRCULATING PUMP FOR DOMESTIC HOT WATER SET @ 122°F

EXPANSION TANK SCHEDULE

ITEM	SERVICE	MANUFACTURER AND MODEL	TANK VOL.	OPER. WT.	MAX. TEMP	DIMENSIONS	REMARKS
ET 1	DOMESTIC HOT WATER GWH-1	WATTS PLT-5	2.1 GAL	5.5 LBS	200°F	8" DIA., 11" LONG	DRAWN STEEL W/BUTYL DIAPHRAGM
ET 2	DOMESTIC HOT WATER GWH-2	WATTS PLT-5	2.1 GAL	5.5 LBS	200°F	8" DIA., 11" LONG	DRAWN STEEL W/BUTYL DIAPHRAGM

PIPE SIZE CHART

SIZE	CW F.V.	CW F.T.	HW F.T.
1/2"	0	1	1
3/4"	0	6	6
1"	0	13	13
1-1/4"	0	24	24
1-1/2"	10	47	47
2"	64	158	120
2-1/2"	245	380	246
3"	630	691	412
	MAX. VELOCITY C.W.(8 F.P.S.)		MAX. VELOCITY H.W.(5 F.P.S.)

ALL PIPE SIZING BASED ON 3.0 PSI PER 100 FT. FRICTION LOSS.

PIPE SCHEDULE

SERVICE	LOCATION	TYPE "L" COPPER	TYPE "M" COPPER	NO-HUB CAST IRON	SCH. 40 BLACK STEEL	SCH. 40 GALV. STEEL	ABS SEWER PIPING	FITTINGS
WATER	INSIDE	●						LEAD FREE SOLDERED FITTINGS
	OUTSIDE	●						LEAD FREE SOLDERED FITTINGS
WASTE	ABV. FLR.			●				TYLER 4-BAND NO-HUB COUPLINGS
	BEL. FLR.					●		
VENT	ABV. FLR.			●				TYLER 2-BAND NO-HUB COUPLINGS
	BEL. FLR.			●				TYLER 2-BAND NO-HUB COUPLINGS
STORM DRAIN	ABV. FLR.			●				TYLER 4-BAND NO-HUB COUPLINGS
	BEL. FLR.			●				TYLER 4-BAND NO-HUB COUPLINGS
CONDENSATE DRAIN	INSIDE	●						LEAD FREE SOLDERED FITTINGS
	OUTSIDE	●						LEAD FREE SOLDERED FITTINGS
NATURAL GAS	INSIDE				●			SCHEDULE 40 THREADED FITTINGS
	OUTSIDE				●			SCHEDULE 40 THREADED FITTINGS

WATER FIXTURE UNIT CHART 2010 CPC & UPC.

FIXTURE	CW FU	HW FU
WC (WATER CLOSET) FLUSH VALVE	5	–
L (LAVATORY)	1	1
S (SINK)	2	2
SS (SERVICE SINK)	3	3
HB (HOSE BIBB)	2.5	–
EACH ADDITIONAL HB	1	

DRAINAGE FIXTURE UNIT CHART 2010 CPC & UPC.

FIXTURE	FU
WC (WATER CLOSET)	4
L (LAVATORY)	1
S (SINK)	2
SS (SERVICE SINK)	3
FD	2
FS	1

SHEET OF

DWG. NO. -

TITLE OF PROJECT:

PICO BRANCH LIBRARY

2201 Pico Blvd.
Santa Monica, CA 90404

PROJECT

KoningEizenberg Architecture
1454 25th St, Santa Monica, CA 90404
310.828.6131 info@kearch.com
310.828.0719 fax www.kearch.com

ARCHITECT'S PROJECT NO.
1001

ARCHITECT

All designs, ideas, arrangements and plans indicated by these drawings are the property and copyright of the Architect and shall neither be used on any other work nor be disclosed to any other person for any use whatsoever without written permission.

Koning Eizenberg Architecture and/or its principals and employees waives any and all liability or responsibility for problems that may occur when these plans, drawings, specifications, and/or designs are followed without the professional's guidance with ambiguities, or conflicts which are alleged.

REGISTERED PROFESSIONAL ENGINEER HENRY Y. LAM No. M53781 Exp. 06-30-13 MECHANICAL STATE OF CALIFORNIA

GLUMAC
617 W. 7th Street, Suite 500
Los Angeles, CA 90017
T. 213.239.8866 F. 213.239.8816
www.glumac.com
Job No.:
Contact:
engineers for a sustainable future™

CONSULTANT

City of Santa Monica
Architecture Services
1437 4TH STREET, SUITE 300
SANTA MONICA, CA 90401
TEL. (310) 458-2205
FAX. (310) 399-1541
architecture@smgov.net

DATE: _____ 20 __
SUBMITTED BY:

DATE: _____ 20 __
APPROVED BY:
Miriam Mulder,
Architecture Services Manager

CITY OF SANTA MONICA
DEPARTMENT OF PUBLIC WORKS

REVIEWED BY: DATE: _____ 20 __

REVIEWED BY: DATE: _____ 20 __

REVIEWED BY: DATE: _____ 20 __

CITY CLIENT

NO.	DATE	BY	DESCRIPTION

REVISIONS

ISSUE:
65% CONSTRUCTION DOCUMENTS / BID SET

DATE
01/23/2012

DRAWING NO: **6693**

SHEET OF SHEETS

SHEET TITLE
PLUMBING SCHEDULES

SHEET NO.
P0.2

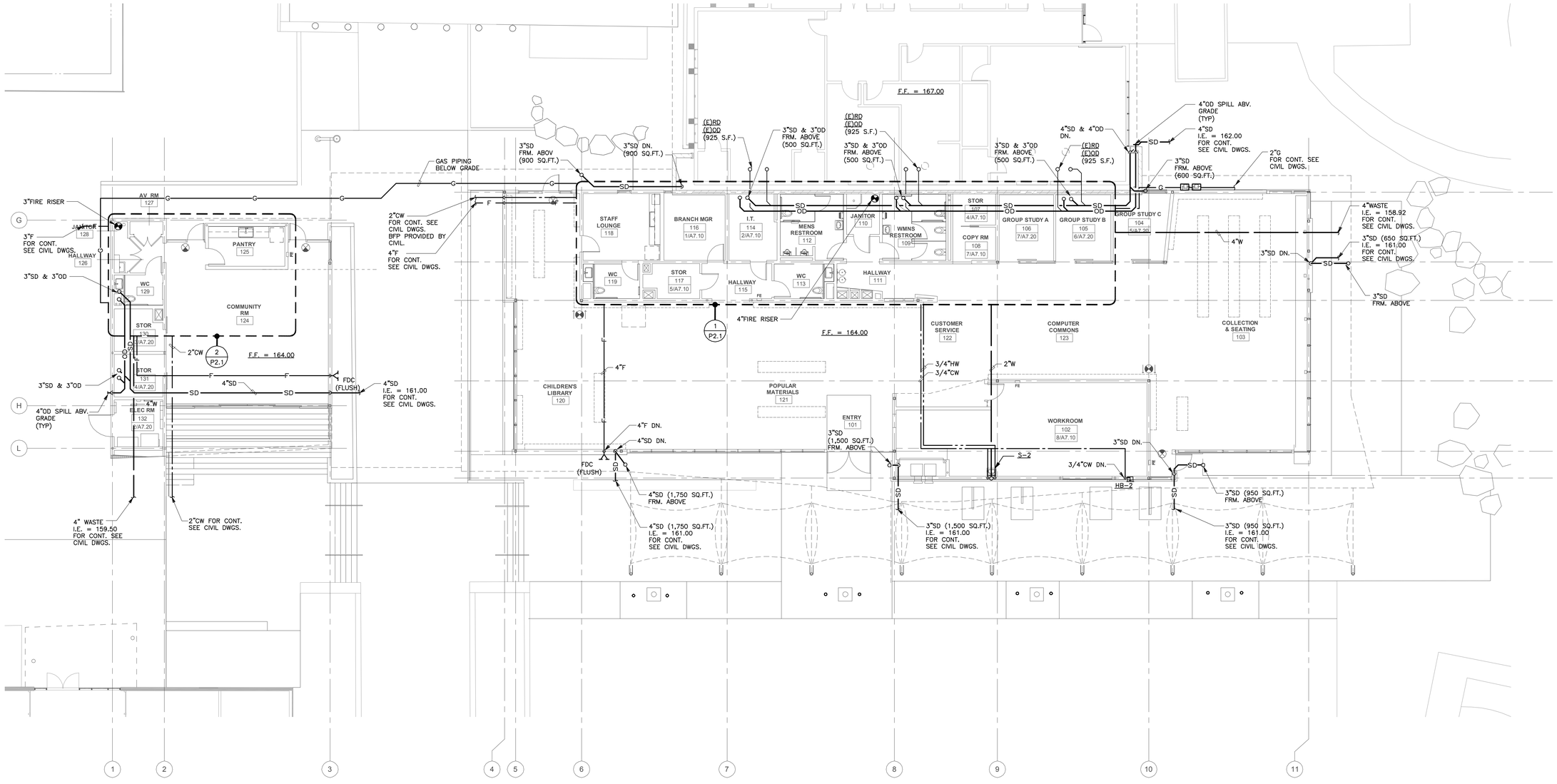

1 PLUMBING PLAN

SCALE: 1/8"=1'-0"

0 4' 8' 16'

PICO BRANCH LIBRARY

2201 Pico Blvd.
Santa Monica, CA 90404

PROJECT

KoningEizenberg Architecture
1454 25th St, Santa Monica, CA 90404
310.828.6131 info@kearch.com
310.828.0719 fax www.kearch.com

ARCHITECT'S PROJECT NO.
1001

ARCHITECT

All designs, ideas, arrangements and plans indicated by these drawings are the property and copyright of the Architect and shall neither be used on any other work nor be disclosed to any other person for any use whatsoever without written permission.

Koning Eizenberg Architecture and/or its principals and employees waives any and all liability or responsibility for problems that may occur when these plans, drawings, specifications, and/or designs are followed without the professional's guidance with ambiguities, or conflicts which are alleged.

REGISTERED PROFESSIONAL ENGINEER
HENRY Y. LAM
No. M33781
Exp. 06-30-13
MECHANICAL
STATE OF CALIFORNIA

GLUMAC
617 W. 7th Street, Suite 500
Los Angeles, CA 90017
T. 213.239.8866 F. 213.239.8816
www.glumac.com
Job No.:
Contact:
engineers for a sustainable future™

CONSULTANT

City of Santa Monica Architecture Services
1437 4TH STREET, SUITE 300
SANTA MONICA, CA 90401
TEL. (310) 458-2205
FAX. (310) 399-1541
architecture@smgov.net

SUBMITTED BY: DATE: ____ 20__

APPROVED BY: Miriam Mulder, Architecture Services Manager DATE: ____ 20__

CITY OF SANTA MONICA
DEPARTMENT OF PUBLIC WORKS

REVIEWED BY: DATE: ____ 20__

REVIEWED BY: DATE: ____ 20__

REVIEWED BY: DATE: ____ 20__

CITY CLIENT

NO.	DATE	BY	DESCRIPTION

REVISIONS

ISSUE
65% CONSTRUCTION DOCUMENTS / BID SET

DATE
01/23/2012

DRAWING NO. **6693**

SHEET OF SHEETS

SHEET TITLE
PLUMBING PLAN

SHEET NO.
P2.0

SHEET OF

DWG. NO. - -

TITLE OF PROJECT

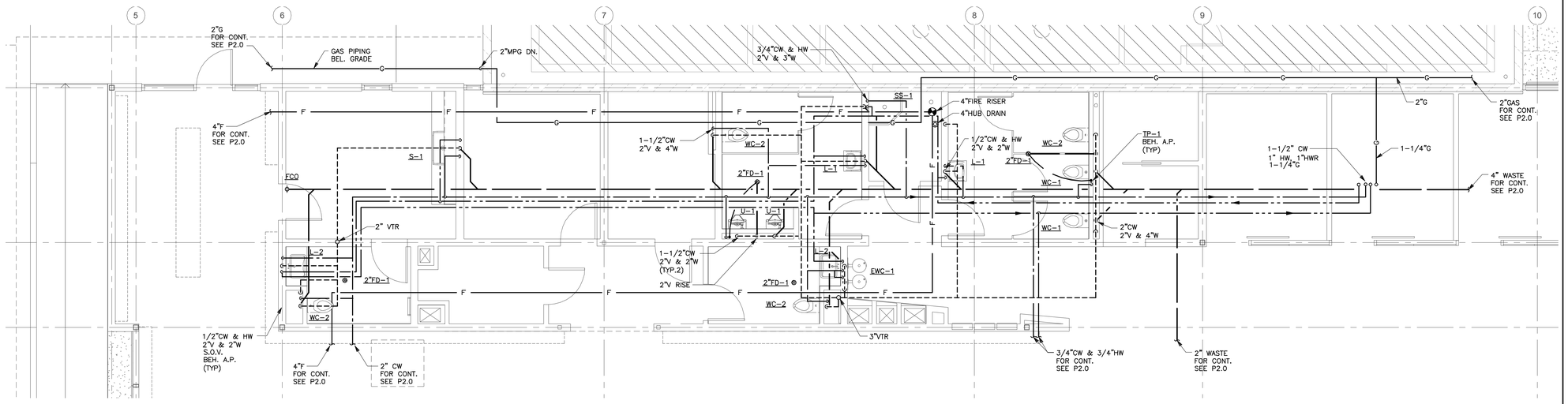

1 PLUMBING PLAN

SCALE: 1/4"=1'-0"

0 2' 4' 8'

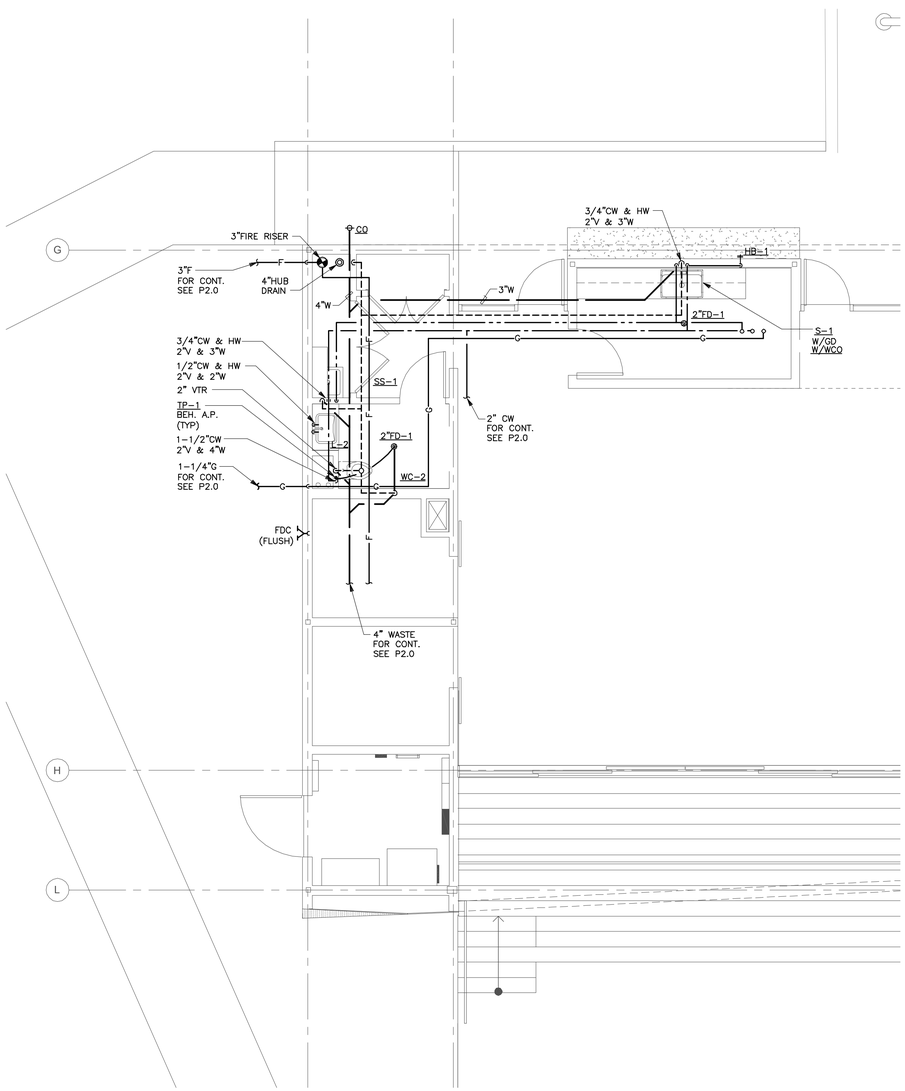

2 PLUMBING PLAN

SCALE: 1/4"=1'-0"

0 2' 4' 8'

PICO BRANCH LIBRARY

2201 Pico Blvd.
Santa Monica, CA 90404

PROJECT

KoningEizenberg Architecture
1454 25th St, Santa Monica, CA 90404

310.828.6131 info@kearch.com
310.828.0719 fax www.kearch.com

ARCHITECT'S PROJECT NO.
1001

ARCHITECT

All designs, ideas, arrangements and plans indicated by these drawings are the property and copyright of the Architect and shall neither be used on any other work nor be disclosed to any other person for any use whatsoever without written permission.

Koning Eizenberg Architecture and/or its principals and employees waives any and all liability or responsibility for problems that may occur when these plans, drawings, specifications, and/or designs are followed without the professional's guidance with ambiguities, or conflicts which are alleged.

REGISTERED PROFESSIONAL ENGINEER
HENRY Y. LAM
No. M33781
Exp. 06-30-13
MECHANICAL
STATE OF CALIFORNIA

GLUMAC
617 W. 7th Street, Suite 500
Los Angeles, CA 90017
T. 213.239.8866 F. 213.239.8816
www.glumac.com
Job No.:
Contact:
engineers for a sustainable future℠

CONSULTANT

City of
Santa Monica
Architecture Services

1437 4TH STREET, SUITE 300
SANTA MONICA, CA 90401
TEL. (310) 458-2205
FAX. (310) 399-1541
architecture@smgov.net

SUBMITTED BY: DATE: _____ 20__

APPROVED BY: DATE: _____ 20__
Miriam Mulder,
Architecture Services Manager

CITY OF SANTA MONICA
DEPARTMENT OF PUBLIC WORKS

REVIEWED BY: DATE: _____ 20__

REVIEWED BY: DATE: _____ 20__

REVIEWED BY: DATE: _____ 20__

CITY CLIENT

NO.	DATE	BY	DESCRIPTION

REVISIONS

ISSUE
65% CONSTRUCTION DOCUMENTS / BID SET

DATE
01/23/2012

DRAWING NO. **6693**

SHEET OF SHEETS

SHEET TITLE
ENLARGED PLUMBING PLANS

SHEET NO.
P2.1

SHEET OF

DWG. NO. - -

TITLE OF PROJECT

NOTE:
THE STORM DRAIN CALCULATION IS BASED ON 3" RAINFALL PER C.P.C. 2010

TABLE 11-1 C.P.C. 2010
VERTICAL RAINWATER PIPING

PIPE	3" RAINFALL
3"	2,930 S.F.
4"	6,130 S.F.
6"	17,995 S.F.
8"	38,660 S.F.

TABLE 11-2 C.P.C. 2010
HORIZONTAL RAINWATER PIPING
FLOW AT 1/8 " FT. SLOPE

PIPE	3" RAINFALL
3"	1,096 S.F.
4"	2,506 S.F.
6"	7,133 S.F.
8"	15,330 S.F.
10"	27,600 S.F.
12"	44,400 S.F.

TABLE 11-2 C.P.C. 2010
HORIZONTAL RAINWATER PIPING
FLOW AT ¼ " / FT. SLOPE

PIPE	3" RAINFALL
3"	1,546 S.F.
4"	3,533 S.F.
6"	10,066 S.F.
8"	21,733 S.F.
10"	38,950 S.F.
12"	62,600 S.F.

NOTE:
UNLESS OTHERWISE NOTED ALL PIPING SHALL SLOPE @ 2% PER 100 FT.

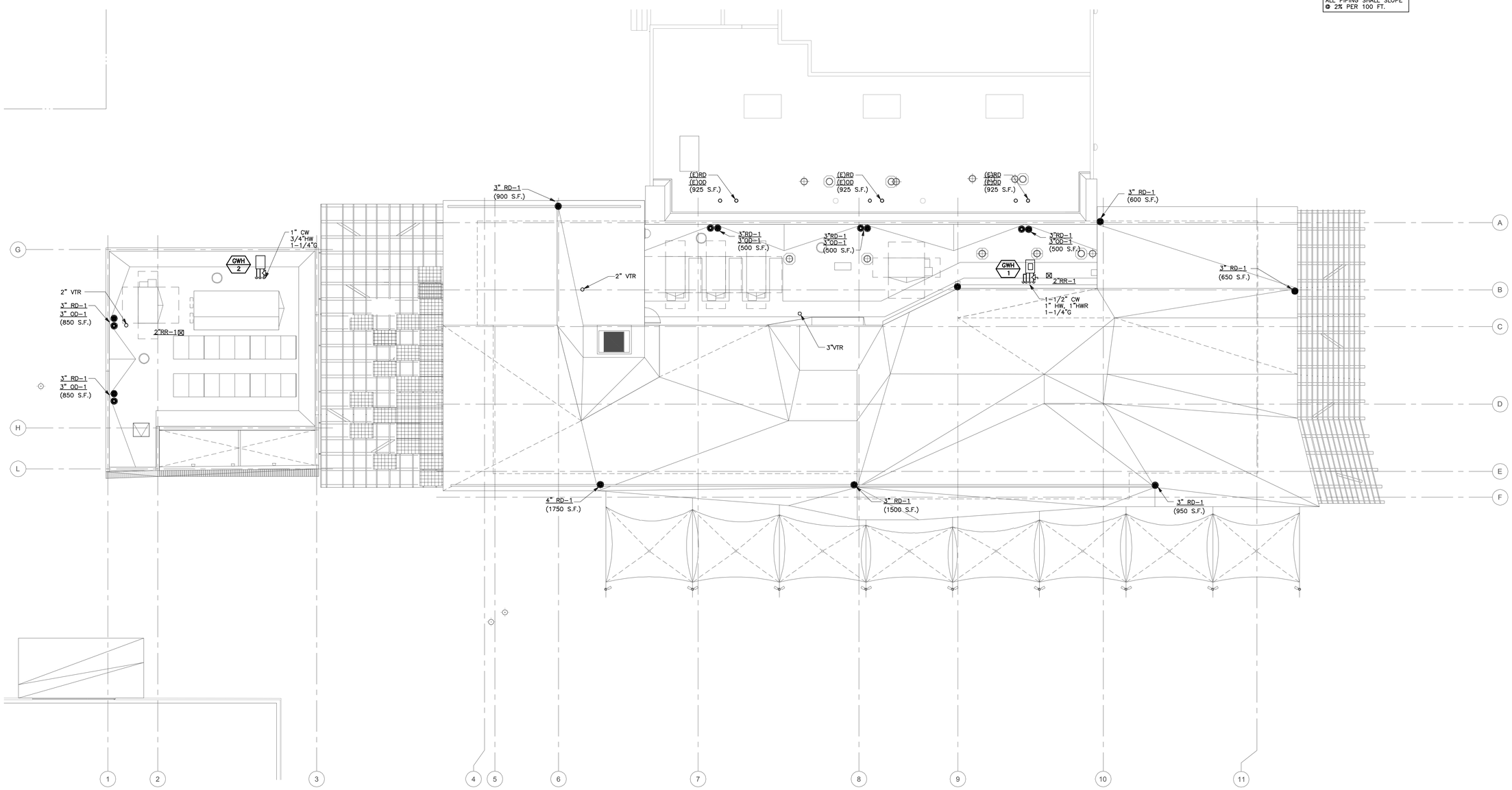

1 **PLUMBING ROOF PLAN**
SCALE: 1/8"=1'-0"

0 4' 8' 16'

PICO BRANCH LIBRARY

2201 Pico Blvd.
Santa Monica, CA 90404

PROJECT

KoningEizenberg Architecture
1454 25th St, Santa Monica, CA 90404
310.828.6131 info@kearch.com
310.828.0719 fax www.kearch.com

ARCHITECT'S PROJECT NO.
1001

ARCHITECT

All designs, ideas, arrangements and plans indicated by these drawings are the property and copyright of the Architect and shall neither be used on any other work nor be disclosed to any other person for any use whatsoever without written permission.

Koning Eizenberg Architecture and/or its principals and employees waives any and all liability or responsibility for problems that may occur when these plans, drawings, specifications, and/or designs are followed without the professional's guidance with ambiguities, or conflicts which are alleged.

REGISTERED PROFESSIONAL ENGINEER
HENRY Y. LAM
No. M33781
Exp. 06-30-13
MECHANICAL
STATE OF CALIFORNIA

GLUMAC
617 W. 7th Street, Suite 500
Los Angeles, CA 90017
T. 213.239.8866 F. 213.239.8816
www.glumac.com
Job No.:
Contact:
engineers for a sustainable future™

CONSULTANT

City of Santa Monica
Architecture Services
1437 4TH STREET, SUITE 300
SANTA MONICA, CA 90401
TEL. (310) 458-2205
FAX. (310) 399-1541
architecture@smgov.net

DATE: _____ 20__
SUBMITTED BY:

DATE: _____ 20__
APPROVED BY:
Miriam Mulder,
Architecture Services Manager

CITY OF SANTA MONICA
DEPARTMENT OF PUBLIC WORKS

REVIEWED BY: DATE: _____ 20__

REVIEWED BY: DATE: _____ 20__

REVIEWED BY: DATE: _____ 20__

CITY CLIENT

NO.	DATE	BY	DESCRIPTION

REVISIONS

ISSUE
65% CONSTRUCTION DOCUMENTS / BID SET

DATE
01/23/2012

DRAWING NO. **6693**

SHEET OF SHEETS

SHEET TITLE
Plumbing ROOF PLAN

SHEET NO.
P2.2

SHEET OF

DWG. NO. - -

TITLE OF PROJECT:

SHEET OF

DWG. NO. :-

TITLE OF PROJECT :

ELECTRICAL NOTES

NOTE: IF CONFLICTS OCCUR BETWEEN DRAWING SPECIFICATION AND BOOK SPECIFICATION, THE MORE STRINGENT OF THE TWO SHALL BE USED.

1. IT IS THE INTENT OF THESE PLANS AND SPECIFICATIONS THAT A COMPLETE AND WORKABLE ELECTRICAL INSTALLATION BE PROVIDED FOR THE EQUIPMENT DESCRIBED OR SHOWN AS BEING IN THIS CONTRACT. PROVIDE LABOR AND TOOLS NECESSARY AND INSTALL APPARATUS, MATERIALS, AND EQUIPMENT IN A FASHION COMPLYING WITH ALL APPLICABLE CODES, INCLUDING ITEMS REQUIRED BUT NOT NECESSARILY SHOWN, SUCH AS LAMPS, COUPLINGS, HANGERS, BRACKETS, CLAMPS, BOXES, CONNECTORS, AND HARDWARE.

2. EXAMINE ALL CONTRACT DOCUMENTS AND VERIFY ALL DIMENSIONS AND CONDITIONS, SUCH AS CABINETS, BEAMS, FURRING, DOOR SWINGS, DUCTS, PIPES, CEILINGS AND BRING ANY DISCREPANCIES TO THE ATTENTION OF THE GENERAL CONTRACTOR PRIOR TO COMMENCING ANY WORK. SWITCHES, CONTROLS, ACCESS DOORS ON ELECTRICAL EQUIPMENT, SHALL BE INSTALLED SO AS TO BE READILY ACCESSIBLE FOR OPERATING, SERVICING, MAINTAINING AND REPAIRING.

3. REFER TO MECHANICAL DRAWING AND OTHER MANUFACTURERS INFORMATION WIRING DIAGRAMS FOR ITEMS AND DEVICES TO BE FURNISHED, INSTALLED AND/OR CONNECTED BY ELECTRICAL CONTRACTOR FOR A COMPLETE AND OPERABLE HEATING, VENTILATING AND AIR CONDITIONING SYSTEM AND OTHER EQUIPMENT. VERIFY EXACT LOCATION OF EQUIPMENT AND CONDUIT TERMINATION AT EQUIPMENT WITH MECHANICAL, PLUMBING AND MANUFACTURES SUB-CONTRACTOR. PROVIDE CONDUITS AND JUNCTION BOXES FOR CONTROL WIRING AND THERMOSTATS AND OTHER CONTROL DEVICES. THE CONTRACTOR SHALL EXTEND WIRING FROM LOCAL DISCONNECT SWITCHES TO ALL MOTORS.

4. THE ELECTRICAL DRAWINGS ARE DIAGRAMMATIC IN NATURE AND INDICATE THE LOCATION OF OUTLETS AND EQUIPMENT AND THE CIRCUIT ARRANGEMENT OF THE REQUIRED WIRING, AND THOUGH NOT NECESSARILY INDICATING THE ACTUAL ROUTES OF CONDUITS, THE DRAWINGS SHALL BE FOLLOWED AS CLOSELY AS PROPER COORDINATION WITH THE WORK OF OTHER TRADES AND SPACE WILL PERMIT. SIMPLIFY INSTALLATION WHEREVER POSSIBLE BUT SUBJECT TO APPROVAL OF THE ENGINEER FOR VISUAL AND STRUCTURAL REASONS. IT IS NOT WITHIN THE SCOPE OF THE DRAWINGS TO SHOW NECESSARY OFFSETS, BENDS, PULL BOXES AND OBSTRUCTIONS. THE DRAWINGS ARE NOT INTENDED TO BE SCALED AND THE ELECTRICAL CONTRACTOR SHALL REFER TO THE ARCHITECTURAL CONSTRUCTION DRAWINGS FOR DIMENSIONS.

5. THE ELECTRICAL WORK SHALL BE INSTALLED IN STRICT COMPLIANCE WITH NEC 2005, CEC 2007, LAEC 2008, T-24 REGULATION AND ORDINANCES, AND AUTHORITIES HAVING JURISDICTION.

6. ERECT AND MAINTAIN SUITABLE BARRIERS, PROTECTIVE DEVICES, LIGHTS AND WARNING SIGNS WHERE REQUIRED FOR THE PROTECTION OF THE PUBLIC AND EMPLOYEES ABOUT THE BUILDING.

7. WHEN CONCRETE WORK IS INCLUDED IN THE SCOPE OF WORK, THE MATERIALS, PROPORTIONING, MIXING, CONVEYING, PLACING, CURING AND PROTECTION OF THE CONCRETE WORK SHALL BE IN ACCORDANCE TO "ACI" STANDARD 301.

8. UNLESS OTHERWISE SHOWN OR SPECIFIED, CONDUIT SHALL BE CONCEALED IN WALLS OR ABOVE FINISHED CEILING.
   A) CONCEALED CONDUIT SHALL BE RUN IN AS DIRECT A LINE AS POSSIBLE. BENDS SHALL BE OF LONG SWEEP TYPE.
   B) EXPOSED CONDUIT SHALL BE RUN PARALLEL TO, OR AT RIGHT ANGLES WITH THE LINES OF THE BUILDING. BEND SHALL BE FREE FROM DENTS OR FLATTENING. CONDUIT SHALL BE SUPPORTED AND SECURELY FASTENED.
   C) CONDUIT SHALL BE INSTALLED AS A COMPLETE SYSTEM BEFORE WIRE OR CONDUCTORS ARE PULLED IN.
   D) CONDUIT SHALL BE INSTALLED ENTIRELY FREE FROM OTHER PIPING, VALVES OR OTHER MECHANICAL EQUIPMENT, AND SHALL NOT BE INSTALLED WITHIN 6 INCHES OF HOT WATER OR STEAM PIPING OR HEATING FLUES.
   E) POCKETS OR TRAPS IN ALL CONDUIT RUNS WHERE MOISTURE MAY COLLECT SHALL BE AVOIDED. WHERE DIPS ARE UNAVOIDABLE, A PULL BOX SHALL BE LOCATED AT EACH LOW POINT IN ORDER TO PROVIDE A MEANS OF DRAINAGE.
   F) THE CONDUIT SYSTEM AND CONDUCTING WIRE ENCLOSURES SHALL BE SECURELY BONDED TOGETHER SO THAT FOR EVERY CONDUCTING COMPONENT IS PROVIDED WITH A LOW RESISTANCE PATH TO GROUND.
   G) DOUBLE LOCKNUTS SHALL BE USED FOR SECURING CONDUIT AT A BOX OR CABINET UNLESS A THREADED HUB IS PROVIDED AS PART OF THE BOX OR CABINET.
   H) RUNNING THREADS SHALL NOT BE USED ON CONDUIT FOR CONNECTION AT COUPLINGS. WHERE 2 LENGTHS OF CONDUIT MUST BE COUPLED TOGETHER, AND IT IS IMPOSSIBLE TO SCREW BOTH LENGTHS INTO AN ORDINARY COUPLING, THEN THE "ERICKSON" TYPE OF COUPLING MUST BE USED IN ORDER TO PROVIDE A RIGID JOINT THAT WILL BE BOTH MECHANICALLY AND ELECTRICALLY EFFECTIVE.
   I) PROTECT CONDUIT FROM DAMAGE AND THE ENTRANCE OF WATER AND FOREIGN MATTER DURING THE CONSTRUCTION PERIOD. WATERTIGHT STOPPERS OR CAPS SHALL BE INSTALLED IMMEDIATELY AFTER THE CONDUIT IS INSTALLED, REMOVED ONLY WHEN WIRE IS TO BE INSTALLED.
   J) THOROUGHLY CLEAN THE INSIDE OF CONDUITS TO ASCERTAIN FOREIGN MATERIALS ARE REMOVED BEFORE PULLING WIRE OR CABLE.
   K) COUPLING AND CONNECTORS USED ON ELECTRIC METALLIC TUBING SHALL BE SET SCREW TYPE, COMPRESSION FOR 2" AND LARGER.
   L) CONDUIT SHALL BE TERMINATED WITH SUITABLE BUSHINGS OR EQUIVALENT DEVICES WHICH SHALL PROTECT THE ENCLOSED WIRES FROM ABRASION AT THE ENDS. INSULATED BUSHINGS SHALL BE USED ON CONDUIT 1-1/4" SIZE AND LARGER.
   M) CONDUIT SIZES SHALL BE MINIMUM OF 3/4" AND IN ACCORDANCE WITH THE MINIMUM REQUIREMENTS OF THE "CEC".
   N) IN EACH CONDUIT WITHOUT CONDUCTORS, PROVIDE ONE #12 TW PULL STRING WITH A TAG IDENTIFYING LOCATION OF OPPOSITE END.
   O) PROVIDE SLEEVES, NIPPLES, AND COUPLINGS REQUIRED FOR THE INSTALLATION OF CONDUIT. SLEEVES SHALL PROJECT 2" ABOVE FLOOR.
   P) FLEXIBLE CONDUIT SHALL BE PROVIDED TO CONNECT MOTORS ON SLIDING BASES, TO CONTROLS, AND TO VIBRATING EQUIPMENT.

9. PROVIDE HANGERS SUPPORT AND FASTENERS AS REQUIRED.
   A) INSTALLATION OF HANGERS AND SUPPORTS SHALL BE MADE TO THE STRUCTURAL STEEL, MASONRY AND POURED CONCRETE. HANGERS AND SUPPORTS SHALL NOT BE INSTALLED TO PRE-CAST CONCRETE, METAL DECKS, STEEL BRACING OR BRIDGING, PIPING OR OTHER CONDUIT.
   B) FASTENERS FOR SUPPORTS AND HANGERS SHALL BE MADE WITH BEAM CLAMPS, U-BOLTS, STUD WELDING OR OTHER APPROVED DEVICES. FASTENERS FOR SUPPORTS AND HANGERS TO CONCRETE SHALL BE MADE WITH ONE PIECE MALLEABLE IRON OR WROUGHT STEEL INSERTS WITH LONG RADIUS NECKS AND KEYHOLE SLOTS FOR ATTACHMENT IN FORMS, WITH SELF DRILLING TYPE EXPANSION SHIELDS WITH INSIDE THREADS AND EXPANSION PLUGS, OR WITH OTHER APPROVED TYPE DEVICES.
   C) INSTALLATION SHALL BE SUCH SO AS TO SUPPORT CONDUIT WITHOUT SAGGING AND SHALL BE CLEAR OF THE WORK OF OTHER TRADES. PROVISION FOR EXPANSION AND CONTRACTION SHALL BE MADE.
   D) SPACING OF SUPPORTS FOR EXPOSED HORIZONTAL CONDUIT RUNS SHALL BE AS FOLLOWS.

SIZE OF CONDUIT (INCHES)	NUMBER OF CONDUITS IN RUN	LOCATION	MAXIMUM SUPPORT SPACING (FEET)
3/4	1 OR 2	ON A FLAT CEILING/WALL	5
3/4	1 OR 2	WHERE IT IS DIFFICULT TO PROVIDE SUPPORTS EXCEPT AT INTERVALS FIXED BY BUILDING CONSTRUCTION	7
3/4	3 OR MORE	ANY LOCATION	7
1 & LARGER	1 OR 2	ON A FLAT CEILING/WALL	6
1 & LARGER	1 OR 2	WHERE IT IS DIFFICULT TO PROVIDE SUPPORTS EXCEPT AT INTERVALS FIXED BY BUILDING CONSTRUCTION	10
1 & LARGER	3 OR MORE	ANY LOCATION	10

   E) SPACING OF SUPPORTS FOR EXPOSED VERTICAL CONDUIT RUNS SHALL BE AS FOLLOWS.

SIZE OF CONDUIT (INCHES)	MAXIMUM SUPPORT SPACING (FEET)
3/4	7
1 AND 1-1/4	8
1-1/2 AND LARGER	10

   F) ELECTRICAL ENCLOSURES SHALL BE FURRED FROM OUTSIDE WALLS OF WET AREAS.

10. EXACT LOCATION OF EQUIPMENT AND OUTLETS SHALL BE VERIFIED IN FIELD. COORDINATE INSTALLATION OF ELECTRICAL SYSTEM WITH THAT OF ALL OTHER TRADES. PRIOR TO COMPLETION OF AFFECTED WORK, ELECTRICAL CONTRACTOR SHALL INSTRUCT THE OWNER ON THE USE AND MAINTENANCE OF THE ELECTRICAL SYSTEM. CONTRACTOR SHALL INCLUDE ALL THE ELECTRICAL EQUIPMENT, LIGHT LUMINAIRES TO BE RELOCATED WITHIN 20 FEET RADIUS BOTH HORIZONTAL AND VERTICAL FROM WHERE THE DEVICES ARE SHOWN ON THE DRAWINGS.

11. PROVIDE A CODE APPROVED DISCONNECT SWITCH OR BREAKER WITHIN SIGHT OF EVERY MOTOR. FOR MOTORS NOT EQUIPPED WITH "BUILT IN" PROTECTION, PROVIDE MAGNETIC OR MANUAL MOTOR STARTER WITH OVERLOAD HEATERS, SIZED TO COMPLY WITH MOTOR MANUFACTURERS RECOMMENDATIONS AND APPLICABLE CODES. VERIFY FUSE SIZE WITH MANUFACTURER RECOMMENDATIONS.

12. SIZE OUTLET BOXES IN CONFORMITY WITH CODE FOR NUMBER AND GAUGE OF CONDUCTORS THEREIN. EXCEPT WHERE NOTED TO BE LARGER, MINIMUM BOX SIZE SHALL BE 4" SQUARE BY 1-1/4" DEEP. JUNCTION BOXES SHALL BE LABELED WITH RESPECTIVE CIRCUIT NUMBERS.

13. OUTLET BOXES SHALL BE FLUSH WITH THE FINISHED SURFACE OF WALLS AND CEILINGS OF COMBUSTIBLE MATERIALS.

14. OPENINGS IN BOXES, CONDUIT BODIES AND FITTINGS SHALL BE ADEQUATELY CLOSED.

15. SURFACE MOUNTED BOXES AND CABINETS MOUNTED IN WET AND DAMP LOCATIONS SHALL BE WEATHERPROOF AND SHALL HAVE AT LEAST 1/4 INCH AIR SPACE BETWEEN THE BOX AND MOUNTING SURFACE.

16. ENTRANCE TO ROOMS AND OTHER GUARDED LOCATIONS THAT CONTAIN LIVE PARTS SHALL BE MARKED WITH A CONSPICUOUS WARNING SIGN FORBIDDING UNQUALIFIED PERSONS TO ENTER.

17. CUT FLOORS, CEILINGS AND WALLS AS REQUIRED FOR INSTALLATION OF ELECTRICAL WORK. APPROVED PENETRATION THROUGH CONCRETE WALLS OR CEILINGS SHALL BE PROVIDED BY MEANS OF SLEEVES OR CORE DRILLING, CONTRACTOR SHALL COORDINATE WITH OTHER TRADES, INCLUDING THE STRUCTURAL ENGINEER, REGARDING CONDUITS PENETRATING STRUCTURAL SLAB AND WALL, WORK SHALL BE PATCHED AND REPAIRED AS DIRECTED BY OWNER.

18. BEFORE ORDERING THE LIGHTING FIXTURES, VERIFY WITH THE ARCHITECT, OR AT THE JOB SITE, THE EXACT CEILING BEING FURNISHED, AND PROVIDE THE NECESSARY HARDWARE FOR A COMPLETE INSTALLATION.

19. INSTALL LIGHTING FIXTURES SO AS TO CLEAR PIPING, DUCTS, AIR DIFFUSERS, GRILLES, ACCESS PANELS & OTHER DEVICES, PROVIDE HANGERS TO SUPPORT FIXTURES WITHOUT CAUSING SAGGING OR DISTORTION TO THE FIXTURES, INSTALL FIXTURES SYMMETRICAL TO CEILING TILES AND OR DIMENSIONS SHOWN, PROVIDE FIRE RATED ENCLOSURE OVER LIGHT FIXTURES RECESSED IN FIRE RATED WALLS OR CEILINGS. REPLACE ALL DAMAGED OR DEFECTIVE FIXTURES INCLUDING GLASSWARE, PLASTICS OR DIFFUSERS UP TO THE TIME OF FINAL INSPECTION AND ACCEPTANCE BY THE OWNER.

20. USE THHN/THWN COPPER WIRES FOR ALL BRANCH CIRCUIT WIRING WITH A SEPARATE GREEN GROUNDING CONDUCTOR. SIZE PER CEC 250-122.

21. TELEPHONE WIRE AND CABLE INSTALLATION, SPLICING, TERMINATING, AND EQUIPMENT SHALL BE IN CONFORMITY WITH THE REQUIREMENTS AND SUBJECT TO APPROVAL OF THE DISTRICT'S COMMUNICATION PERSONAL.
    A) SIZE TELEPHONE CABINETS TO HOUSE CABLING, SPLICING, AND WIRING.
    B) PROVIDE TELEPHONE CONDUIT SYSTEM SEPARATE AND INDEPENDENT FROM OTHER SYSTEMS.

22. THE NON-CURRENT CARRYING METALLIC PARTS OF ALL ELECTRICAL EQUIPMENT AND ENCLOSURES, INCLUDING CONDUITS, SUPPORTS, CABINETS, MOTOR FRAMES, SWITCHBOARD ENCLOSURES, CONTROL PANELS AND ASSOCIATED EQUIPMENT, WHICH ARE INSTALLED OR CONNECTED UNDER THIS CONTRACT, SHALL BE PROPERLY GROUNDED BY CONNECTION TO THE GROUNDING SYSTEM, REGARDLESS OF WHETHER OR NOT THESE CONNECTIONS ARE SHOWN ON THE DRAWINGS.
    A) THE GROUNDING INSTALLATION SHALL HAVE PROVISIONS FOR BOTH SYSTEM AND EQUIPMENT GROUNDS AS DEFINED BY THE "CEC" THESE GROUNDING SYSTEMS ARE TO BE EFFECTIVELY INSULATED FROM EACH OTHER EXCEPT AT THE SERVICE CONNECTION.
    B) GROUNDING SHALL BE DONE IN ACCORDANCE WITH THE PROVISIONS OF "CEC" AND THE "NEC". LOCAL REQUIREMENTS OF THE INSPECTION AUTHORITY HAVING JURISDICTION SHALL GOVERN IN ALL MATTERS OF INTERPRETATION.
    C) IF WATER SERVICE IS USED FOR GROUNDING POINT, IT SHALL BE ASCERTAINED THAT THE WATER PIPING IS ELECTRICALLY CONTINUOUS AT JOINTS WITHIN 5FT OF BUILDING AND IS OF CONDUCTING MATERIAL. WATER PIPING WITH SWEATED JOINTS IN ELECTRICAL PATH SHALL HAVE SUCH JOINTS BONDED.
    D) WHERE GROUND CABLES ENTER AND LEAVE FERROUS CONDUITS, THEY SHALL BE MECHANICALLY CONNECTED TO THE END OF THE RACEWAY. WHERE GROUND CABLE PASSES THROUGH FERROUS FLOORING OR FRAMING, CONNECTION SHALL BE MADE TO SUCH METAL.

23. THE CONTRACTOR SHALL KEEP ALL PARTS OF THE BUILDING AND SITE FREE FROM ANY ACCUMULATIONS OF RUBBISH OR WASTE MATERIALS CAUSED BY HIS WORKMEN, AND SHALL REMOVE SUCH ACCUMULATIONS FROM THE BUILDING, SITE AND PROPERTY. JOB SITE SHALL BE CLEANED AT THE END OF EACH WORKING DAY.

24. THOROUGHLY CLEAN ALL PARTS OF THE EQUIPMENT AND MATERIAL INSTALLED UNDER THIS SECTION. SURFACES OF EXPOSED CONDUIT SHALL BE CLEANED OF CEMENT, PLASTER, DIRT, RUST, GREASE, AND OTHER FOREIGN MATTER, AND BE LEFT IN CONDITION SUITABLE TO THE CONTRACTOR AND ACCEPTABLE FOR PAINTING.
    A) EQUIPMENT FURNISHED WITHOUT SHOP APPLIED FINISH SHALL BE FIELD PAINTED.
    B) CONCEALED SURFACES OF METAL RACKS, FRAMES, AND BOXES SHALL BE PAINTED BEFORE MOUNTING.
    C) AFTER TESTS HAVE BEEN COMPLETED, CLEAN ALL LIGHTING FIXTURES AND EQUIPMENT WITH SOAP AND WATER, LEAVING EVERYTHING IN WORKING ORDER AT THE COMPLETION OF THE ELECTRICAL WORK.

25. WIRING AND CONNECTIONS SHALL BE TESTED FOR CONTINUITY, GROUNDS, SHORT CIRCUITS, AND OTHER DEFECTS BEFORE ANY EQUIPMENT OR FIXTURES ARE CONNECTED THERETO. CABLES SHALL BE CHECKED FOR CONTINUITY, SHORTS, INSULATION RESISTANCE, AND PROPER PHASING. CONTRACTOR SHALL TERMINATE ALL CABLES & WIRES WITH TERMINAL LUGS (SUPPLIED BY CONTRACTOR).

26. INSULATION SHALL BE TESTED BEFORE AND AFTER INSTALLATION, AND BEFORE ENERGIZING.
    A) RUBBER INSULATION SHALL BE TESTED FOR ACCEPTANCE BY APPLYING DIRECT CURRENT POTENTIAL NOT OVER 3 TIMES THE RATIO OF DIRECT CURRENT TO 60% OF EQUIVALENT "RMS" ALTERNATING CURRENT FACTORY TEST VOLTAGE FOR 5 MINUTES.
    B) VARNISHED CAMBRIC, PAPER, AND OTHER INSULATION SHALL BE TESTED IN THE MANNER DIRECTED BY AND UP TO THE LIMITS RECOMMENDED BY THE MANUFACTURER.
    C) INSULATION RESISTANCE SHALL BE TESTED BY MEGGER OF NOT LESS THAN 600 VOLTS OUTPUT FOR CIRCUITS 480 VOLTS AND LESS. ANY CIRCUIT SHOWING AN INSULATION RESISTANCE OF LESS THAN 1 MOHM SHALL BE INVESTIGATED AND THE WEEK POINT CORRECTED. CORRECT OR REPLACE ANY CIRCUIT DEFECTIVE OR GROUNDED AND MAKE WIRE-BY-WIRE TEST.

27. THE ENTIRE SYSTEM SHALL BE PLACED IN PROPER OPERATING CONDITION.
    A) OVERLOAD DEVICES SHALL BE ADJUSTED AND SET TO SUIT THE LOADS WHICH THEY CONTROL.
    B) LOADS ON ALL PARTS OF SYSTEMS SHALL BE BALANCED, INSOFAR AS IS PRACTICAL.
    C) ALL CHANGES SHALL BE MADE THAT ARE NECESSARY FOR ADJUSTING, SETTING AND BALANCING.
    D) PHASE ROTATION AT ALL BUSES, PANELS, SWITCHBOARD ETC., SHALL BE CHECKED TO SEE IF IT CONFORMS WITH RECOGNIZED STANDARDS.
    E) GROUND TESTS SHALL BE MADE WITH THE 3 ELECTRODE "AC" OR "DC" VOLTAGE DROP METHOD TO ESTABLISH INITIAL READINGS FOR RECORDS, AND TO ASCERTAIN THAT THEY MEET DESIGN AND CODE REQUIREMENTS.
    F) CONTROL CIRCUITS SHALL BE CHECKED OUT FOR PROPER FUNCTIONING AND FAIL-SAFE QUALITIES.
    G) RECEPTACLES SHALL BE CHECKED OUT FOR CORRECT AND CONSTANT PHASE POSITION, AND GROUNDED RECEPTACLES SHALL BE TESTED FOR LOCATION AND EFFECTIVENESS OF GROUNDED PIN.
    H) LIGHTING SWITCHING SHALL BE TESTED FOR CORRECT OPERATIONS ESPECIALLY WHERE 3 AND 4 WAY OPERATION IS DESIGNATED.
    I) CONTROL DEVICES SUCH AS LIMIT SWITCHES, LEVEL CONTROLS, PRESSURE CONTROLS, THERMOSTATS, SHALL BE SET FOR OPERATING CONDITIONS. COORDINATE WITH MECHANICAL CONTRACTOR.
    J) RUNNING LOADS OF MOTORS SHALL BE CHECKED AGAINST NAMEPLATE DATA. OVERLOADS SHALL BE REPORTED.

28. NO PIPING DUCT OR EQUIPMENT FOREIGN TO ELECTRICAL SHALL BE PERMITTED TO BE LOCATED WITH THE DEDICATED SPACE ABOVE THE ELECTRICAL EQUIPMENT.

29. ALL NEW ELECTRICAL EQUIPMENT SHALL BE LISTED BY A CITY OF LOS ANGELES RECOGNIZED ELECTRICAL TESTING LABORATORY OR APPROVED BY THE DEPARTMENT.

SIGNAL DEVICES

SYMBOL	DESCRIPTION
	TERMINAL/MOUNTING BOARD, 8' HIGH X WIDTH AS SHOWN, FIRE TREATED.
	SIGNAL SYSTEM EQUIPMENT ENCLOSURES AS NOTED-SURFACE, RECESSED MOUNTED
	DATA OUTLET - WALL. SUBSCRIPT DENOTES QUANTITY OF DATAPORTS. BLANK INDICATES (2) DATAPORTS
W	TELEPHONE OUTLET - WALL, W = USE HIGHER MOUNTING HEIGHT PER MOUNTING HT. DETAIL
	DATA OUTLET - WALL. SUBSCRIPT DENOTES QUANTITY OF DATAPORTS. BLANK INDICATES (2) DATAPORTS
	FLUSH FLOOR BOX DEVICE - DEVICE TYPE PER SYMBOLS ABOVE
AV	AV OULET. PROVIDE CONDUIT PER CHURCH'S REQUIREMENTS.

ELECTRICAL LEGEND

NOT ALL SYMBOLS, ABBREV., ETC. ARE NECESSARILY USED ON THIS PROJECT

POWER DEVICES

SYMBOL	DESCRIPTION
	DUPLEX RECEPTACLE - WALL MOUNTED AT 18" AFF U.O.N. 20 AMP, 120 VOLT, COVER PLATE PER ARCHITECT INSTRUCTION
	DUPLEX RECEPTACLE - CEILING MOUNTED, 20 AMP, 120 VOLT, COVER PLATE PER ARCHITECT INSTRUCTION
	DOUBLE DUPLEX RECEPTACLE - WALL MOUNTED AT 18" AFF U.O.N. 20 AMP, 120 VOLT, COVER PLATE PER ARCHITECT INSTRUCTION.
	DOUBLE DUPLEX RECEPTACLE - CEILING MOUNTED, 20 AMP, 120 VOLT, COVER PLATE PER ARCHITECT INSTRUCTION.
	SPECIAL PURPOSE RECEPTACLE -WALL MOUNTED AT 18" AFF U.O.N. NEMA CONFIGURATION AS NOTED ON DRAWINGS.
L5-15R	SPECIAL PURPOSE RECEPTACLE -CEILING MOUNTED. NEMA CONFIGURATION AS NOTED ON DRAWINGS.
AB	RECEPTACLE TYPE SHOWN -WALL -ABOVE COUNTER BACKSPLASH. SEE ARCHITECTURAL DRAWINGS.
"ON ALT."	SHADED RECEPTACLES NOTED "ON ALT." ABOVE ARE CONNECTED TO ALTERNATE POWER SOURCE (EMERG., STANDBY, UPS, ETC.) PER CIRCUITING INDICATED
	DUPLEX RECEPTACLE - WALL - WITH INTEGRAL GROUND FAULT CIRCUIT INTERRUPTER
WP	RECEPT. TYPE SHOWN W/ WEATHERPROOF COVER AND INTEGRAL GROUND FAULT CIRCUIT INTERRUPTER
+42"	RECEPT. TYPE SHOWN AT SPECIAL HEIGHT AS INDICATED ON DRAWINGS.
IG	ISOLATED GROUND RECEPTACLE RECEPTACLE SYMBOL TO MATCH DESCRIPTION ABOVE.
PDU	UNDER FLOOR POWER DISTRIBUTION UNIT. HAWORTH OR EQUAL.
	RAISED FLOOR OUTLET BOX, TYPE AS SHOWN ABOVE. OUTLET BOX TO BE COMPATIBLE WITH PDU & HAVE JUMPERED CONNECTIONS.

SWITCHING CONTROLS

SYMBOL	DESCRIPTION
S^a	SWITCH, FLUSH IN WALL, TOGGLE, SINGLE-POLE, SINGLE THROW +42"AFF U.O.N. (SUBSCRIPT DENOTES UNIT CONTROLLED)
S_2	SWITCH, FLUSH IN WALL, TOGGLE, TWO-POLE SINGLE THROW +42"AFF U.O.N.
S_3	SWITCH, FLUSH IN WALL, THREE WAY +42"AFF U.O.N. (CONNECT TO MATCHING SWITCH FOR 3-WAY USE)
S_4	SWITCH, FLUSH IN WALL, FOUR WAY +42"AFF U.O.N. (CONNECT TO MATCHING SWITCH FOR 3-4 WAY USE)
S_K	SWITCH, FLUSH IN WALL, KEY OPERATED +42"AFF U.O.N.
D	FLUORESCENT DIMMER SWITCH, FLUSH IN WALL, TOGGLE +42"AFF U.O.N., SINGLE-POLE, SINGLE-THROW. SUBSCRIPT DENOTES UNIT CONTROLLED.)
$\$^1$	LOW VOLTAGE MOMENTARY CONTACT SWITCH +42"AFF U.O.N. SUPERSCRIPT DENOTES RELAY NUMBER. SEE LIGHTING CONTROLS SCHEDULES FOR MORE DETAILS.
S_{WP}	WEATHERPROOF SWITCH
S_T	MOTOR-RATED THERMAL OVERLOAD SWITCH (POLES NOTED, HORSEPOWER RATED)
PC	PHOTOCELL
TC	TIME CLOCK
OS	WALL MOUNTED DUAL-TECHNOLOGY OCCUPANCY SENSOR WITH INTEGRAL POWER UNITS
OS	CEILING MOUNTED DUAL-TECHNOLOGY OCCUPANCY SENSOR WITH INTEGRAL POWER UNITS
LCP ?	LIGHTING CONTROL PANEL AND ASSOCIATED COMPONENTS. PROVIDE 120V OR 277V CONTROL POWER AS REQUIRED OR AS INDICATED.
TX	REMOTE MOUNTED LINE TO LOW-VOLTAGE FUSED TRANSFORMER. CONCEAL FROM VIEW.

DISTRIBUTION & EQUIPMENT

SYMBOL	DESCRIPTION
	BRANCH CIRCUIT PANELBOARDS, SURFACE AND RECESS MOUNTED, SOLID= 120/280V, HATCHED= 277/480V, DASHED EQUIP. = FUTURE
	MOTOR CONTROL CENTER W/ CODE CLEARANCES SHOWN, DASHED EQUIP. = FUTURE
	TRANSFORMER WITH CODE CLEARANCES SHOWN
	SERVICE AND/OR DISTRIBUTION EQUIPMENT WITH CODE CLEARANCES SHOWN
	CONNECTION TO MOTOR PROVIDED BY OTHERS
VFD	CONNECTION TO DIV. 15 FURNISHED VARIABLE FREQUENCY DRIVE WITH INTEGRAL DISCONNECT DIV. 16 TO INSTALL VFD EQUIPMENT
30A	DISCONNECT SWITCH, SIZE AS NOTED OR IF NOT SHOWN SIZE PER CONNECTED MOTOR SIZE AND MOTOR DISCONNECT SCHEDULE
F 30A	FUSED DISCONNECT SWITCH, SIZE AS NOTED. SIZE FUSE PER MANUFACTURER'S RECOMMENDATIONS
C 60AT	ENCLOSED CIRCUIT BREAKER DISCONNECT SWITCH, TRIP SIZE AS NOTED.
	DISCONNECT W/ MAGNETIC MOTOR STARTER (CONTROLLER) OR CONTACTOR. SIZE PER LOAD SERVED. NEMA SIZE #1 MINIMUM.
	MAGNETIC MOTOR STARTER (CONTROLLER) OR CONTACTOR. SIZE PER LOAD SERVED. NEMA SIZE #1 MINIMUM.
	DIV. 16 CONNECTION TO EQUIPMENT PROVIDED BY OTHERS. SHADED = ON ALT. POWER SOURCE NOTED
	DIV. 16 CONNECTION TO EQUIPMENT WITH INTEGRAL DISCONNECT THAT IS PROVIDED BY OTHERS. SHADED = ON ALT. POWER SOURCE NOTED
	EQUIPMENT OR TERMINAL ENCLOSURE AS NOTED, SURFACE AND RECESS MOUNTED

WIRING

SYMBOL	DESCRIPTION
	WIRING CONCEALED IN CEILING OR WALL LINE WEIGHT TOP TO BOTTOM = NEW, EXITING TO REMAIN, FUTURE. CONTRACTOR MAY RUN WIRING IN WALLS, UNDERGROUND, OR IN RAISED FLOOR MARK AS-BUILTS ACCORDINGLY.
	WIRING CONCEALED IN FLOOR OR UNDER GRADE OR ROUTED IN CEILING SPACE OF FLOOR BELOW. LINE WEIGHT TOP TO BOTTOM= NEW, EXISTING TO REMAIN, FUTURE
X X X X	EXISTING WIRING TO BE REMOVED
T	TELEPHONE SYSTEM CONDUIT
MV	MEDIUM VOLTAGE CONDUIT
G	BARE GROUNDING GRID OR CONDUCTORS, UON.
GC	GROUNDING CONDUCTOR(S) ROUTED IN CODE SIZED CONDUIT, UON.
L1A-1,3 HD1A	HOME RUN WIRING TO INDICATED DESTINATION, 3/4"C. MIN. OR AS OTHERWISE NOTED. CONTRACTOR SHALL USE CIRCUIT SIZES NOTED IN RESPECTIVE SCHEDULES AND INFORMATION IN THE FEEDER AND BRANCH CIRCUIT SCHEDULES. CONTRACTOR MAY COMBINE HOMERUNS UP TO A MAXIMUM OF (6) CIRCUITS, FOLLOW CODE FOR DERATING & RESIZE WIRE & CONDUIT SIZES.
	CONDUIT STUBBED OUT AT LOCATION SHOWN. PROVIDE INSULATED BUSHING & PULLROPE.
	TELEPHONE/DATA SLEEVE THROUGH WALL, ABOVE CEILING. EXTEND TO ACCESSIBLE TILE CLG. BOTH SIDES. TERMINATE WITH BUSHINGS. (1) 1.25" CO UON. COORDINATE LOCATIONS WITH CABLE INSTALLER(S) PRIOR TO ROUGH-IN.
J	JUNCTION BOXES, WALL, CEILING AND FLOOR MOUNTED. 4" SQ. BOX MIN., LARGER IF REQUIRED
PB	PULL BOX, MIN. SIZE PER NEC., UON.
	UNDERFLOOR RACEWAY
	FLEXIBLE CONDUIT CONNECTION
	POWER CONNECTION TO DIV 15 FIRE/SMOKE DAMPER. REFER TO FSD CONNECTION DETAIL IF NOT SHOWN
	GROUND ROD CONNECTION
	GROUND ROD CONNECTION WITH TEST WELL BOX
	LIGHTNING SYSTEM AIR TERMINAL

BRANCH CIRCUIT WIRING LEGEND

SYMBOL	DESCRIPTION
	3/4" CONDUIT WITH 2#12 WIRES AND 1#12 GND.
	3/4" CONDUIT WITH 3#12 WIRES AND 1#12 GND.
	3/4" CONDUIT WITH 4#12 WIRES AND 1#12 GND.
	3/4" CONDUIT WITH 5#12 WIRES AND 1#12 GND.
	3/4" CONDUIT WITH 6#12 WIRES AND 1#12 GND.
#10	NUMBER INDICATES GAUGE OF NEUTRAL WIRE. ALL OTHER WIRES #12 UON.
C.O.	CONDUIT-ONLY WITH #12 NYLON PULL-WIRE (3/4" MINIMUM SIZE, UNLESS NOTED OTHERWISE)
	SHADED DOT INDICATES ISOLATED GROUND WIRE. SIZE TO BE VERIFIED WITH FEEDER SCHEDULE E0.2.

NOTE:

1. ALL WIRING TO BE COPPER THHN INSULATION & GROUND PER NEC 250-122(B) CONCEALED IN WALL OR CEILING.

GROUNDING SYSTEM

SYMBOL	DESCRIPTION
G	BARE GROUNDING GRID OR CONDUCTORS, UON.
GC	GROUNDING CONDUCTOR(S) ROUTED IN CODE SIZED CONDUIT, UON.
	GROUND GRID BOND POINT
	24" GROUND BAR
	60" GROUND BAR

REFERENCE SYMBOLS

SYMBOL	DESCRIPTION
12	SHEET NOTE REFERENCE
125.4	BRANCH CIRCUIT OR FEEDER NOMINAL AMPACITY & TYPE; REFER TO BRANCH CIRCUIT AND FEEDER SCHEDULES FOR WIRE AND CONDUIT SIZES & QTY.
1 / E4.1	REFER TO DETAIL NO. ON DRAWING INDICATED NOT ALL DETAIL REFERENCES ARE SHOWN. ALL DETAILS APPLY TO ALL APPLICABLE SITUATIONS, UON.
CH 1	MECHANICAL EQUIPMENT IDENTIFICATION TAG
EQUIP NAME	EQUIPMENT BY OTHERS IDENTIFICATION TAG

DIAGRAMS

SYMBOL	DESCRIPTION
	SWITCH
	BUS BAR
	PIPE GROUND
TVSS	TRANSIENT VOLTAGE SURGE SUPPRESSOR
	CURRENT TRANSFORMER
M	UTILITY CO. APPROVED SOCKET WITH METER INSTALLED. SQUARE = REMOTE MOUNTED
DMU	DIGITAL METER UNIT. REFER TO SPECIFICATIONS.
	DELTA CONNECTION
	GROUNDED WYE CONNECTION
	CONNECTION TO GROUND
100AT 225AF	CIRCUIT BREAKER, WITH TRIP & FRAME AMPERE RATING
225AF 400AS	FUSED SWITCH, WITH FUSE AND SWITCH AMPERE RATING
GF	GROUND FAULT TRIP UNIT
ST	SHUNT TRIP UNIT, 120VAC OR VOLTAGE AS NOTED
K	KEY INTERLOCK
	GENERATOR

ELECTRICAL DESIGN CRITERIA

1. 2010 CALIFORNIA ELECTRICAL CODE (CEC) BASED ON 2008 NATIONAL ELECTRIC CODE WITH STATE AMENDMENTS.
2. 2010 TITLE 24, PART 6 CALIFORNIA ENERGY EFFICIENCY STANDARDS FOR RESIDENTIAL AND NON-RESIDENTIAL BUILDINGS.
3. FIRE ALARM CODE VERSION USED: NFPA 2005
4. CALIFORNIA BUILDING CODE (CBC): 2010
5. AMERICAN WITH DISABILITIES ACT, (ADA)
6. LIGHTING CRITERIA USED, BASED ON RECOMMENDED LEVELS BY ILLUMINATING ENGINEERING SOCIETY (IES)

CORRIDORS	- 15 FC
ELEVATOR PIT	- 5 FC
ELEVATOR MACHINE	- 20 FC
OFFICES	- 55 FC
RESTROOMS	- 20 FC
PARKING LOT	- 2 FC
GARAGE	- 4 FC
WALKWAYS	- 4 FC

7. LIGHTING CONTROLS:
A. LOW VOLTAGE CONTROLS FOR SWEEP-OFF FUNCTIONS IN OFFICE AREAS.
B. OCCUPANCY SENSORS IN CONFERENCE RMS, STORAGE ROOMS, RESTROOMS, SMALL OFFICES.
C. PHOTOCELL ON & OFF- EXTERIOR LIGHTING

10. POWER DENSITY IN OFFICE AREAS: 6 WATTS/SQFT.

11. MAX. NUMBER OF WORKSTATIONS PER 20A CIRCUIT: 4

ABBREVIATIONS

(E)	EXISTING TO REMAIN
(F)	FUTURE
(R)	EXISTING TO BE REMOVED
(ER)	EXISTING TO BE RELOCATED
AB	ABOVE COUNTER BACKSPLASH
AC	ALTERNATING CURRENT
A, AMP	AMPERES
AF	AMPERE (RATED) FUSE OR CB FRAME
AFF	ABOVE FINISHED FLOOR
AFC	ABOVE FINISHED COUNTER
AIC	EQUIPMENT SHORT CIRCUIT INTERRUPT RATING (RMS SYM. AMPS)
ALT	ALTERNATE
AS	AMPERE (RATED) SWITCH
AT	CIRCUIT BRKR TRIP SETTING (AMPS)
ATS	AUTOMATIC TRANSFER SWITCH
AUTO	AUTOMATIC
AUX	AUXILIARY
AWG	AMERICAN WIRE GAUGE
BAT	BATTERY
C	CONDUIT (CIRCULAR RACEWAY)
CB	CIRCUIT BREAKER
CFM	CUBIC FEET PER MINUTE
CKT	CIRCUIT
CLG	CEILING
CO	CONDUIT ONLY
CU	COPPER
DC	DIRECT CURRENT
DISC	DISCONNECT
DIA	DIAMETER
DIV	DIVISION
DP	DISTRIBUTION PANEL
DPDT	DOUBLE POLE DOUBLE THROW
DPST	DOUBLE POLE SINGLE THROW
DWG	DRAWING
E,EMERG	EMERGENCY
EF	EXHAUST FAN
EMT	ELECTRICAL METALLIC TUBING
EWC	ELECTRIC WATER COOLER
EWH	ELECTRIC WATER HEATER
FBO	FURNISHED BY OTHERS
FC	FOOT CANDLES
FF	FLUSH FLOOR MOUNTED
FLA	FULL LOAD AMPERES
FSD	FIRE/SMOKE DAMPER
FU	FUSE
GEN	GENERATOR
GFI	GROUND FAULT CIRCUIT INTERRUPTER
GND	GROUND
HP	HORSEPOWER
HPF	HIGH POWER FACTOR
HZ	HERTZ (CYCLES PER SECOND)
IES	ILLUMINATING ENGINEERING SOCIETY
IG	ISOLATED GROUND
KCMIL	THOUSAND CIRCULAR MILS
KO	KNOCK OUT
KW	KILOWATTS
KVA	KILOVOLT-AMPERES
LTG	LIGHTING
LCP	LIGHTING CONTROL PANEL
MAX	MAXIMUM
MFR	MANUFACTURER
MIN	MINIMUM
MISC	MISCELLANEOUS
MLO	MAIN LUGS ONLY
MTD	MOUNTED
MTR	MOTOR
NEC	NATIONAL ELECTRICAL CODE
NEMA	NATIONAL ELECTRICAL MFGR'S ASSOC.
NL	NIGHT LIGHT (UNSWITCHED)
NO	NORMALLY OPEN
NTS	NOT TO SCALE
NP	NAMEPLATE
OD	OUTSIDE DIAMETER
OS	OCCUPANCY SENSOR
P	POLE
PB	PUSHBUTTON
PH, ø	PHASE
PNL	PANEL
+,POS	POSITIVE
RNC	RIGID NON-METALLIC CONDUIT (PVC)
RS	RAPID START
RST	REMOTE STATION TRANSMITTER
SEC	SECONDARY
SN	SHEET NOTE
SPDT	SINGLE POLE DOUBLE THROW
SPST	SINGLE POLE SINGLE THROW
SWBD	SWITCHBOARD
SWGR	SWITCHGEAR
TEL	TELEPHONE
TYP	TYPICAL
UL	UNDERWRITERS LAB
UON	UNLESS OTHERWISE NOTED
UPS	UNINTERRUPTIBLE POWER SUPPLY
V	VOLTS
VA	VOLT-AMPERES
W	WATT
W/	WITH
W/O	WITHOUT
WP	WEATHERPROOF,
XFMR	TRANSFORMER
Z	ZONE
", IN	INCHES
', FT	FEET
ø	PHASE
>	GREATER THAN
<	LESS THAN
≥	GREATER THAN OR EQUAL TO
1sc	SHORT CIRCUIT CURRENT

ELECTRICAL DRAWING LIST

E0.1	ELECTRICAL LEAD SHEET
E0.2	SINGLE LINE DIAGRAM/PANEL SCHEDULES
E0.3	TITLE 24/LIGHTING FIXTURE SCHEDULE
E0.4	TITLE 24/LIGHTING
E0.5	LIGHTING CONTROL RISER DIAGRAM & SCHEDULES
E1.0	ELECTRICAL SITE PLAN
E2.0	ELECTRICAL POWER PLAN
E2.1	ELECTRICAL POWER ROOF PLAN
E3.0	LIGHTING PLAN
E5.1	PANELBOARD SCHEDULES
E5.2	LIGHTING CONTROL DIAGRAM

PICO BRANCH LIBRARY

2201 Pico Blvd.
Santa Monica, CA 90404

PROJECT

KoningEizenbergArchitecture
1454 25th St, Santa Monica, CA 90404
310.828.6131 info@kearch.com
310.828.0719 fax www.kearch.com

ARCHITECT'S PROJECT NO.
1001

ARCHITECT

All designs, ideas, arrangements and plans indicated by these drawings are the property and copyright of the Architect and shall neither be used on any other work nor be disclosed to any other person for any use whatsoever without written permission.

Koning Eizenberg Architecture and/or its principals and employees waives any and all liability or responsibility for problems that may occur when these plans, drawings, specifications, and/or designs are followed without the professional's guidance with ambiguities, or conflicts which are alleged.

REGISTERED PROFESSIONAL ENGINEER JACOB CHAN No. E13358 Exp. 09-30-12 ELECTRICAL STATE OF CALIFORNIA

GLUMAC
617 W. 7th Street, Suite 500
Los Angeles, CA 90017
T. 213.239.8866 F. 213.239.8816
www.glumac.com
Job No.:
Contact:
engineers for a sustainable future™

CONSULTANT

City of Santa Monica
Architecture Services
1437 4TH STREET, SUITE 300
SANTA MONICA, CA 90401
TEL. (310) 458-2205
FAX. (310) 399-1541
architecture@smgov.net

DATE : ______ 20 __
SUBMITTED BY :

DATE : ______ 20 __
APPROVED BY :
Miriam Mulder,
Architecture Services Manager
CITY OF SANTA MONICA
DEPARTMENT OF PUBLIC WORKS

REVIEWED BY : DATE : ______ 20 __

REVIEWED BY : DATE : ______ 20 __

REVIEWED BY : DATE : ______ 20 __

CITY CLIENT

NO.	DATE	BY	DESCRIPTION

REVISIONS

ISSUE
65% CONSTRUCTION DOCUMENTS / BID SET

DATE
01/23/2012

DRAWING NO. **6693**

SHEET OF SHEETS

SHEET TITLE
ELECTRICAL LEAD SHEET

SHEET NO.
E0.1

SHEET NOTES

1. CONTRACTOR TO PROVIDE (N)EMON DMON DIGITAL METERING UNIT AT THE MAIN ELECTRICAL BUILDING OF BLDG "A". METERING TO BE INSTALLED AT EXISTING METER LOCATION AND METER TO MATCH EXISTING.
2. PANEL TO BE EQUIPPED WITH ISOLATED GROUND BUS BAR. GROUND BUS TO TIE DIRECTLY BACK TO MAIN BUILDING GROUND BUS.
3. CONTRACTOR TO PROVIDE DIGITAL MULTI-METER FOR LEED PURPOSES. VERIFY WITH THE CONTROLS CONTRACTOR, THAT THE METER HAS THE PROPER COMMUNICATION PROTOCOL FOR INTEGRATION INTO THE BMS.

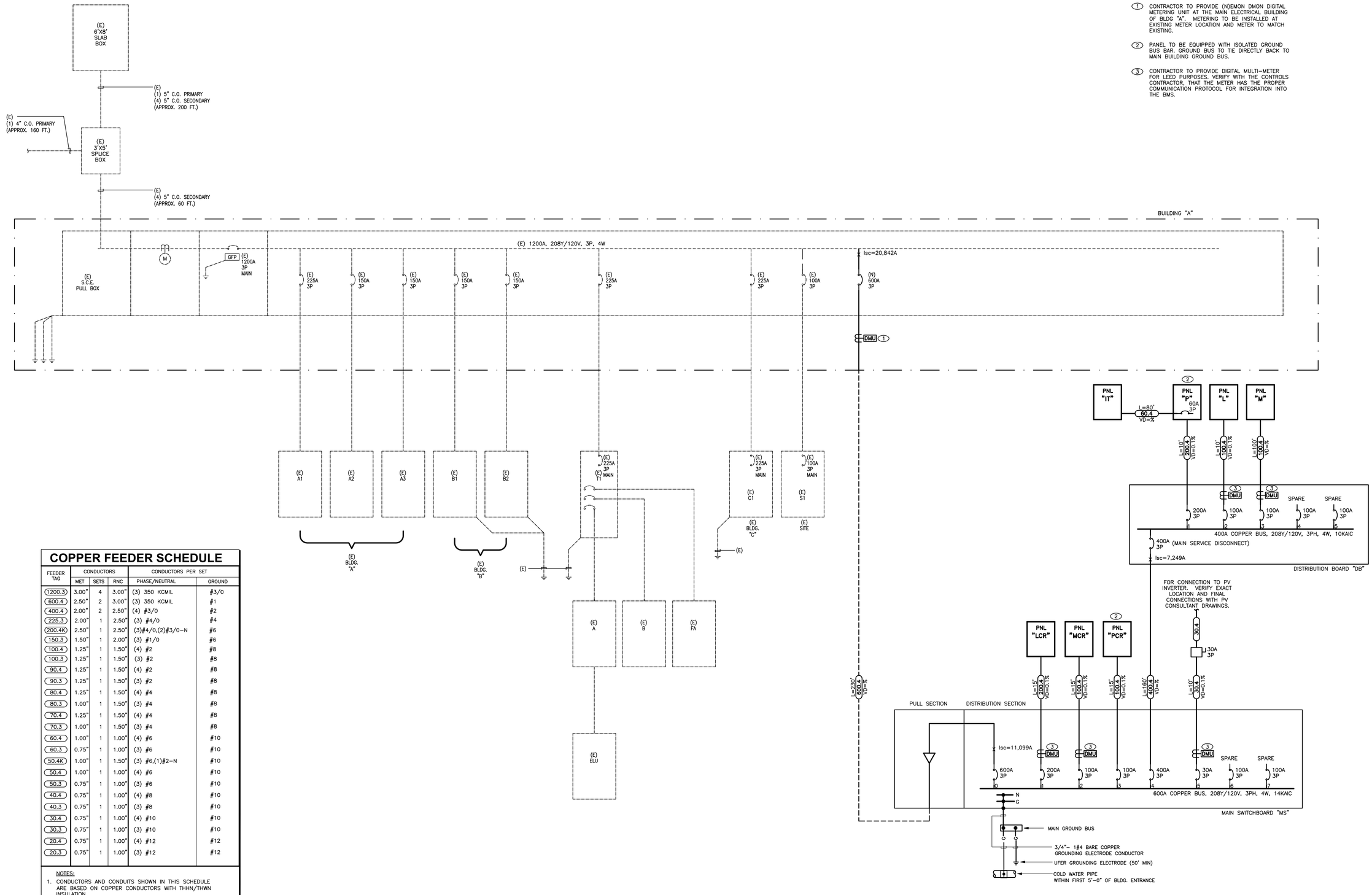

COPPER FEEDER SCHEDULE

FEEDER TAG	CONDUCTORS			CONDUCTORS PER SET	
	MET	SETS	RNC	PHASE/NEUTRAL	GROUND
1200.3	3.00"	4	3.00"	(3) 350 KCMIL	#3/0
600.4	2.50"	2	3.00"	(3) 350 KCMIL	#1
400.4	2.00"	2	2.50"	(4) #3/0	#2
225.3	2.00"	1	2.50"	(3) #4/0	#4
200.4K	2.50"	1	2.50"	(3)#4/0,(2)#3/0-N	#6
150.3	1.50"	1	2.00"	(3) #1/0	#6
100.4	1.25"	1	1.50"	(4) #2	#8
100.3	1.25"	1	1.50"	(3) #2	#8
90.4	1.25"	1	1.50"	(4) #2	#8
90.3	1.25"	1	1.50"	(3) #2	#8
80.4	1.25"	1	1.50"	(4) #4	#8
80.3	1.00"	1	1.50"	(3) #4	#8
70.4	1.25"	1	1.50"	(4) #4	#8
70.3	1.00"	1	1.50"	(3) #4	#8
60.4	1.00"	1	1.00"	(4) #6	#10
60.3	0.75"	1	1.00"	(3) #6	#10
50.4K	1.00"	1	1.50"	(3) #6,(1)#2-N	#10
50.4	1.00"	1	1.00"	(4) #6	#10
50.3	0.75"	1	1.00"	(3) #6	#10
40.4	0.75"	1	1.00"	(4) #8	#10
40.3	0.75"	1	1.00"	(3) #8	#10
30.4	0.75"	1	1.00"	(4) #10	#10
30.3	0.75"	1	1.00"	(3) #10	#10
20.4	0.75"	1	1.00"	(4) #12	#12
20.3	0.75"	1	1.00"	(3) #12	#12

NOTES:

1. CONDUCTORS AND CONDUITS SHOWN IN THIS SCHEDULE ARE BASED ON COPPER CONDUCTORS WITH THHN/THWN INSULATION.
2. THIS SCHEDULE SHALL BE USED ON ALL FEEDERS SERVING LOADS WHERE THE CIRCUIT BREAKER SIZE MATCHES THE AMPACITY OF ITS FEEDER. REFER TO EQUIPMENT SCHEDULES SHEET E00.05 FOR LOADS, SUCH AS MOTORS, PUMPS, FANS, CHILLERS, ETC, WHERE THE CIRCUIT BREAKER SIZE IS LARGER THAN THE AMPACITY OF ITS FEEDER.
3. PROVIDE GROUND WIRE NOTED ABOVE IN ALL FEEDERS AND BRANCH CIRCUITS. WHERE MULTIPLE CONDUITS ARE INDICATED PROVIDE NOTED GROUND WIRE IN EACH CONDUIT.
4. NOMINAL AMPACITIES GREATER THAN 100 AMPS ARE FOR 75°C TERMINALS.
5. MET = EMT, IMC, GRC, RAC, OR PVC COATED GRC TYPE CONDUITS. RNC = PVC 40, PVC 80 OR FIBERGLASS TYPE CONDUITS ROUTED UNDERGROUND. CONDUIT SIZES NOTED ON SINGLE LINE DIAGRAM OR ON PLANS SUPERSEDE SIZES NOTED ABOVE IF LARGER.

PICO BRANCH LIBRARY

2201 Pico Blvd.
Santa Monica, CA 90404

PROJECT

KoningEizenbergArchitecture
1454 25th St, Santa Monica, CA 90404
310.828.6131 info@kearch.com
310.828.0719 fax www.kearch.com

ARCHITECT'S PROJECT NO.
1001

ARCHITECT

All designs, ideas, arrangements and plans indicated by these drawings are the property and copyright of the Architect and shall neither be used on any other work nor be disclosed to any other person for any use whatsoever without written permission.

Koning Eizenberg Architecture and/or its principals and employees waives any and all liability or responsibility for problems that may occur when these plans, drawings, specifications, and/or designs are followed without the professional's guidance with ambiguities, or conflicts which are alleged.

REGISTERED PROFESSIONAL ENGINEER JACOB CHAN No. E13358 Exp. 09-30-12 ELECTRICAL STATE OF CALIFORNIA

GLUMAC
617 W. 7th Street, Suite 500
Los Angeles, CA 90017
T. 213.239.8866 F. 213.239.8816
www.glumac.com
Job No.:
Contact:
engineers for a sustainable future™

CONSULTANT

City of Santa Monica Architecture Services
1437 4TH STREET, SUITE 300
SANTA MONICA, CA 90401
TEL. (310) 458-2205
FAX. (310) 399-1541
architecture@smgov.net

DATE: _____ 20__
SUBMITTED BY:

DATE: _____ 20__
APPROVED BY:
Miriam Mulder,
Architecture Services Manager

CITY OF SANTA MONICA
DEPARTMENT OF PUBLIC WORKS

REVIEWED BY: DATE: _____ 20__

REVIEWED BY: DATE: _____ 20__

REVIEWED BY: DATE: _____ 20__

CITY CLIENT

NO.	DATE	BY	DESCRIPTION

REVISIONS

ISSUE
65% CONSTRUCTION DOCUMENTS / BID SET

DATE
01/23/2012

DRAWING NO. **6693**

SHEET OF SHEETS

SHEET TITLE
SINGLE LINE DIAGRAM/PANEL SCHEDULES

SHEET NO.
E0.2

SHEET OF
DWG NO. -
TITLE OF PROJECT

CERTIFICATE OF COMPLIANCE (Part 1 of 4) LTG-1C

Project Name: PICO BRANCH LIBRARY (SMALL BLDG.)
Date: February 28, 2011
Project Address: VIRGINIA AVENUE PARK, SANTA MONICA, CA 90404
Climate Zone
Building CFA
Unconditioned Floor Area

Building Type: ☐ NON RESIDENTIAL ☐ HIGH RISE RESIDENTIAL ☐ HOTEL/MOTEL GUEST ☐ RESIDENTIAL PUBLIC SCHOOLS ☐ CONDITIONED SHACKS ☐ UNCONDITIONED SHACKS ☐ SCHOOLS
Phase of Construction: ☒ NEW CONSTRUCTION ☐ ADDITION ☐ ALTERATION
Method of Compliance: ☐ COMPLETE BUILDING ☒ AREA CATEGORY ☐ TAILORED

DOCUMENTATION AUTHOR'S DECLARATION STATEMENT

* I certify that this Certificate of Compliance documentation is accurate and complete.

Name: JACOB CHAN | Signature:
Company: GLUMAC | Date: February 28, 2011
Address: 617 WEST 7TH STREET, 5TH FLOOR | BA #: | CEPE #:
City/st/Zip: LOS ANGELES, CA 90017-3830 | Phone #: (213) 239-8866

Principal Lighting Designer's Declaration Statement

* I am eligible under Division 3 of the California Business and Professions Code to accept responsibility for the lighting design.
* This Certificate of Compliance identifies the lighting features and performance specifications required foe compliance with Title 24, Parts 1 and 6 of the California Code of Regulations.
* The design features represented on this Certificate of Compliance are consistent with the information provided to document this design on the other applicable compliance forms, worksheets, calculations, plans and specifications submitted to the enforcement agency for approval with this building permit application.

Name: JACOB CHAN | Signature:
Company: GLUMAC | Phone #: (213) 239-8866
Address: 617 WEST 7TH STREET, 5TH FLOOR | License #: E13358
City/st/Zip: LOS ANGELES, CA 90017-3830 | Date: February 28, 2011

LIGHTING MANDATORY MEASURES
Indicate location on building plans of Mandatory Measures Not

LIGHTING COMPLIANCE FORMS & WORKSHEET (check box if worksheet is included)

For detailed instructions on the use of this and all Energy Efficiency Standards compliance forms, please refer to the Nonresidential Manual published by the California Energy Commission.

☐ LTG-1C Pages 1 to 4	Certificate of Compliance. All pages required on plans for all submittals
☐ LTG-2C	Lighting Controls Credit Worksheet
☐ LTG-3C	Indoor Lighting Power Allowance
☐ LTG-4C Pages 1 to 4	Tailored Method Worksheet
☐ LTG-5C Pages 1 and 2	Line Voltage Track Lighting Worksheet

CERTIFICATE OF COMPLIANCE (Part 2 of 4) (CONDITIONED) LTG-1C

Project Name: PICO BRANCH LIBRARY (SMALL BLDG.)
Date: February 28, 2011

INDOOR LIGHTING SCHEDULE and FIELD INSPECTION ENERGY CHECKLIST

Installation Certificate, LTG-1-INST (retain a copy and verify form is completed and signed) — Field Inspector ☐
Certificate of Acceptance, LTG-2A (retain a copy and verify form is completed and signed) — Field Inspector ☐

A separate Lighting Schedule Must Be Filled Out for Conditioned and Unconditioned Spaces. Installed Lighting Power Listed on this Lighting Schedule is for:
☐ CONDITIONED SPACE ☐ UNCONDITIONED SPACE

☐ The actual indoor lighting power listed below includes all installed permanent and portable lighting systems in accordance with 146(a)
☐ Only for offices: Up to the first 0.2 watts per square foot of portable lighting shall not be required to be included in the calculation of actual indoor lighting power density in accordance with the Exception to 146(a). All portable lighting in excess of 0.2 watts per square foot is totaled below.

LUMINAIRE (TYPE, LAMPS, BALLASTS)			INSTALLED WATTS						
A	B	C	D	E		F	G	H	
Name or Item Tag	Complete Luminaire Description (i.e. 3 lamp fluorescent troffer, F32T8, one dimmable electronic ballast)	Special Features	Watts per Luminaire (Watts)	How wattage was determined: CEC Default from NA8	According to 130 (d or e)	Number of Luminaires	Installed Watts (D x F)	Field Inspector (2): Pass	Fail
RZ1	RECESSED LINEAR 2 LAMP T5	☐	96	X	☐	8	768	☐	☐
SF1	SURFACE MOUNTED T-5 FLOURESCENT	☐	96	X	☐	1	96	☐	☐
RD1	RECESSED WARM LED 4"	☐	22	X	☐	5	110	☐	☐
PF1	PENDANT MOUNTED SINGLE LAMP	☐	30	X	☐	6	180	☐	☐
		☐		X	☐			☐	☐
		☐		X	☐			☐	☐
		☐		X	☐			☐	☐
		☐		X	☐			☐	☐
		☐		X	☐			☐	☐
		☐		X	☐			☐	☐
		☐		☐	☐			☐	☐
		☐		☐	☐			☐	☐

INSTALLED WATTS PAGE TOTAL: 1154
Building total number of pages:
INSTALLED WATTS BUILDING TOTAL (Sum of all pages): 1154
Enter into LTG-1C Page 4 of 4

1 Wattage shall be determined according to Section 130(d and e). Wattage shall be rating of light fixture, not rating of bulb.
2 If Fail then describe on Page 2 of the Inspection Checklist Form and take appropriate action to correct. Verify building plans if necessary.

2008 Nonresidential Compliance Forms — August 2009

CERTIFICATE OF COMPLIANCE (Part 3 of 4) LTG-1C

Project Name: PICO BRANCH LIBRARY (SMALL BLDG.)
Date: February 28, 2011

INDOOR LIGHTING SCHEDULE and FIELD INSPECTION ENERGY CHECKLIST

Fill in controls for all spaces: a) area controls, b) multi-level controls, c) manual daylighting controls for daylit areas > 250 ft2, automatic daylighting controls for daylit areas > 2,500 ft2, d) shut-off controls, e) display lighting controls, f) tailored lighting controls - general lighting controlled separately from display, ornamental and display case lighting and g) demand responsive automatic controls for retail stores > 50,000 ft2, in accordance with Section 131.

MANDATORY LIGHTING CONTROLS - FIELD INSPECTION ENERGY CHECKLIST

Type / Description	Number of Units	Location in Building	Special Features	Field Inspector: Pass	Fail
			☐	☐	☐
			☐	☐	☐
			☐	☐	☐
			☐	☐	☐
			☐	☐	☐
			☐	☐	☐
			☐	☐	☐
			☐	☐	☐
			☐	☐	☐
			☐	☐	☐

SPECIAL FEATURES INSPECTION CHECKLIST (See Page 2 of 4 of LTG-1C)

The local enforcement agency should pay special attention to the items specified in this checklist. These items require special written justification and documentation, and special verification. The local enforcement agency determines the adequacy of the justification, and may reject a building or design that otherwise complies based on the adequacy of the special justification and documentation submitted.

Field Inspector's Notes or Discrepancies:

2008 Nonresidential Compliance Forms — August 2009

CERTIFICATE OF COMPLIANCE (Part 4 of 4) LTG-1C

Project Name: PICO BRANCH LIBRARY (SMALL BLDG.)
Date: February 28, 2011

CONDITIONED AND UNCONDITIONED SPACE LIGHTING MUST NOT BE COMBINED FOR COMPLIANCE

Indoor Lighting Power Conditioned Spaces		Watts	Indoor Lighting Power Unconditioned Spaces		Watts
Installed Lighting (from Conditioned LTG-1C Page 2)		1154	Installed Lighting (from Unconditioned LTG-1C Page 2)		0
Lighting Control Credit (from Conditioned Spaces LTG-2C)	-	0	Lighting Control Credit (from Unconditioned Spaces LTG-2C)	-	0
Adjusted Installed Lighting Power	=	1,154	Adjusted Installed Lighting Power	=	0
Complies if Installed <= Allowed		YES	Complies if Installed <= Allowed		YES
Allowed Lighting Power Conditioned Spaces (from LTG-3C)		1,499	Allowed Lighting Power Unconditioned Spaces (from LTG-3C)		0

REQUIRED ACCEPTANCE TEST

Designer:
This form is to be used by the designer and attached to the plans. Listed below is the acceptance test for the Lighting system, **LTG-2A**. The designer is required to check the acceptance tests and list all controls devices serving the building or space shall be certied as meeting the Acceptance Requirements for Code Compliance. If all the lighting system or control of a certain type requires a test, list the different lighting and the number of systems. The NA7 Section in the Appendix of the Nonresidential Reference Appendices Manual describes the test. Since this form will be part of the plans, completion of this section will allow the responsible party to budget for the scope of work appropriately. **Forms can be grouped by type of Luminaire controlled.**

Enforcement Agency:
Systems Acceptance. Before Occupancy Permit is granted for a newly constructed building or space or when ever new lighting system with controls is installed in the building or space shall be certified as meeting the Acceptance Requirements. The **LTG-2A** form is not considered a complete form and is not to be accepted by the enforcement agency unless the boxes are checked and/or filled and signed. In addition, a Certificate of Acceptance forms shall be submitted to the enforcement agency that certifies plans, specifications, installation certificates, and operating and maintenance information meet the requirements of 10-103(b) of Title 24 Part 6. The field inspector must receive the properly filled out and signed forms before the building can receive final occupancy. A copy of the **LTG-2A** for each different lighting luminaire control(s) must be provided to the owner of the building for their records.

Equipment Requiring Testing	Luminaires Controlled: Description	Number of like Controls	Location	LTG-2A: Controls and Sensors and Automatic Day Lighting Controls Acceptance
				☐
				☐
				☐
				☐
				☐
				☐
				☐
				☐
				☐

2008 Nonresidential Compliance Forms — August 2009

INDOOR LIGHTING POWER ALLOWANCE LTG-3-C

Project Name: PICO BRANCH LIBRARY (SMALL BLDG.)
Date: February 28, 2011

ALLOWED LIGHTING POWER (Choose One Method)

A separate LTG-3C must be filled out for Conditioned and Unconditioned Spaces. Indoor Lighting Power Allowances listed on this page are only for: ☒ CONDITIONED Spaces ☐ UNCONDITIONED Spaces

COMPLETE BUILDING METHOD - CONDITIONED SPACES

BUILDING CATEGORY (From 146 Table 146-E)	WATTS PER SQ FT	COMPLETE BUILDING AREA	ALLOWED WATTS

AREA CATEGORY METHOD - CONDITIONED SPACES

A: AREA CATEGORY (From 146 Table 146-F)	B: WATTS PER SQ FT	C: AREA (SF)	D: ALLOWED WATTS
CONFERENCE (1)	1.4	803	1,124
KITCHEN, FOOD PREPARATION	1.6	99	158
CORRIDORS, RESTROOMS, STAIRS, & SUPPORT AREAS	0.6	272	163
ELECTRICAL, MECHANICAL, TELEPHONE ROOMS (2)	0.7	76	53
Area Category Method Page TOTALS		1,250	1,499
Sum of Additional Allowed Watts from Area Category Method - Part B (from table below)			
Total Pages for Area Category Method: Area Category Method Project TOTALS		1,250 SF Areas	1,499 WATTS

AREA CATEGORY METHOD - Part B Additional Wattage Allowance (from Table 146-F Footnotes)

A: Primary Function	B: sf	C: Additional Watts per sf Allowed	D: Wattage allowance (BxC)	E: Description(s) and Quantity of Special Luminaire (2) Types in each Primary Function Area	F: Total Design Watts	G: ALLOWED WATTS Smaller of
TOTALS - Enter into Area Category Method - Part A (table above)						WATTS

1. Additional watts available only when allowed according to the footnotes on bottom of Table 146-F for chandelier or sconce, art, craft, assembly or manufacturing specialized task work, precision commercial/industrial work; or lab specialized task work.
2. Special luminaires are light fixtures described in the Table 146-F Footnotes that are subject to an additional wattage allowance.

TAILORED METHOD

Total Allowed Watts using the Tailored Method taken from LTG-4C (Page 1 of 4) Row 3

The indoor lighting power allowance using the Tailored Method of Compliance shall be determined using the LTG-4C set of forms. A separate set of LTG-4C forms shall be filled out for CONDITIONED and UNCONDITIONED spaces

2008 Nonresidential Compliance Forms — August 2009

MANDATORY MEASURES

Project Name: PICO BRANCH LIBRARY (SMALL BLDG.)

☒	§131(d)	**BUILDING SHUT-OFF** THE BUILDING LIGHTING SHUT-OFF SYSTEM CONSISTS OF AN AUTOMATIC TIME SWITCH, WITH A ZONE FOR EACH FLOOR.
☒	§131(c)	**OVERRIDE FOR BUILDING LIGHTING SHUT-OFF** THE AUTOMATIC BUILDING SHUT-OFF SYSTEM IS PROVIDED WITH A MANUAL, ACCESSIBLE OVERRIDE SWITCH IN SIGHT OF THE LIGHTS. THE AREA OF OVERRIDE IS NOT TO EXCEED 5,000 SQ. FT.
☒	§131(c)	**AUTOMATIC CONTROL DEVICES CERTIFIED:** ALL AUTOMATIC CONTROL DEVICES SPECIFIED ARE CERTIFIED. ALL ALTERNATE EQUIPMENT SHALL BE CERTIFIED AND INSTALLED AS DIRECTED BY THE MANUFACTURER.
☒	§131(c)	**FLUORESCENT BALLAST AND LUMINARIES CERTIFIED:** ALL FLUORESCENT FIXTURES SUBJECT TO CERTIFICATION AND SPECIFIED FOR THE PROJECTS ARE CERTIFIED.
☒	§131(c)	**INDIVIDUAL ROOM/AREA CONTROLS:** EACH ROOM AND AREA IN THIS BUILDING IS EQUIPPED WITH A SEPARATE SWITCH OR OCCUPANCY SENSOR DEVICE FOR EACH AREA WITH FLOOR-TO-CEILING WALLS.
☒	§131(c)	**UNIFORM REDUCTION FOR INDIVIDUAL ROOMS:** ALL ROOMS AND AREAS GREATER THAN 100 SQUARE FEET AND MORE THAN 0.8 WATTS PER SQUARE FOOT OF LIGHTING LOAD SHALL BE CONTROLLED WITH MULTI-LEVEL SWITCHING FOR UNIFORM REDUCTION OF LIGHTING WITHIN THE ROOM.
☒	§131(c)	**DAYLIT AREA CONTROL:** ALL ROOMS THAT ARE GREATER THAN 250 SQUARE FEET AND CONTAIN WINDOWS AND SKYLIGHTS, THAT ALLOW FOR THE EFFECTIVE USE OF DAYLIGHT IN THE AREA SHALL HAVE 50% OF THE LIGHTING POWER IN EACH DAYLIT AREA CONTROLLED BY A SEPARATE SWITCH; OR
☐	§131(c)	THE EFFECTIVE USE OF DAYLIGHT CANNOT BE ACCOMPLISHED BECAUSE THE WINDOWS ARE CONTINUOUSLY SHADED BY A BUILIDING ON THE ADJACENT LOT. DIAGRAM OF SHADING DURING DIFFERENT TIMES OF THE YEAR IS INCLUDED ON PLANS.
☐	§131(e)	**DISPLAY LIGHTING:** DISPLAY LIGHTING SHALL BE SEPARATELY SWITCHED ON CIRCUITS THAT ARE 20 AMPS OR LESS.

LIGHTING FIXTURE SCHEDULE

TYPE	DESCRIPTION	LOCATION	MANUFACTURER & CATOLOG #	NUMBER OF LAMPS & TYPE	TOTAL WATTS	VOLTAGE	REMARKS
BM1	POLE MOUNTED METAL HALIDE WALKWAY FIXTURE	EXTERIOR WALKWAYS	LITHONIA AS-1-150M-SR3-RPA-SCWA-DNA-L/LP POLE: RTA-20-5C-DNA	PHILIPS (1)MHC150 /U/MP/4K MASTERCOLOR OR = BY GE	180W	–	INSTALLATION TO MATCH EXISTING POST TOPS IN THELMA TERRY PARKING LOT IN ALL RESPECTS. ROTATE OPTICS TO MATCH DIRECTION AS SHOWN IN PLANS.
DT1	TABLE LAMPS PERMANENTLY MOUNTED ON TABLES	DESKS	LOUIS POULSEN AJ-T	PHILIPS (1)A-19/IF MEDIUM	60W	–	
DT2	SURFACE MOUNTED WARM WHITE 3000K LINEAR LED SINGLE RAIL TABLE LAMP PERMANENTLY MOUNTED ON TABLES	EASTERN READING AREAS	VODE 507-RR-L07-SA-30-A	WARM WHITE LEDS INCLUDED	3.4W	–	
DT2a	SURFACE MOUNTED WARM WHITE 3000K LINEAR LED SINGLE RAIL TABLE LAMP PERMANENTLY MOUNTED ON TABLES	READING DESKS	VODE 517-RR-L28-SA-30-A	WARM WHITE LEDS INCLUDED	16.8W	–	
FF1	SURFACE MOUNTED 28 WATT LINEAR T5 FLUORESCENT 4" BY 4' RECTANGULAR WET LABELED DOWNLIGHT WITH ACRYLIC LENS	CANOPIES	AXIS LIGHTING WBS-F-4-T5-1-FINISH-VOLTS-ERS-1-SC-TF	PHILIPS (1)F28T5/ADV830 /ALTO OR EQUAL BY: GE, SYLVANIA	28W	–	
JD1	SPIKE MOUNTED WARM WHITE LD TREE UPLIGHT	LANDSCAPE	LUMIERE CAMBRIA 203 SERIES	WARM WHITE LEDS INCLUDED	ALLOW 30W	–	
JD2	SURFACE MOUNTED WET LOCATION WITH WARM WHITE LED UPLIGHTS TO HIGHLIGHT FABRIC CANOPIES	EXTERIOR FABRIC CANOPIES	LUMEPULSE LBM-VOLTS-30K-FL-BK-DIM	WARM WHITE LEDS INCLUDED	27W	–	DIMMABLE VIA 0-10VOLT CONTROL.
PC1	PENDANT MOUNTED 26 WATT COMPACT FLUORESCENT DECORATIVE CHANDELIER WITH LUTRON ECOSYSTEM DIMMABLE BALLAST	SEATING AREAS	LIGHTOLIER PM SERIES PM32MX1SA-PG01-GL01-SK01	PHILIPS (1)PL-C 26W/830/ALTO OR EQUAL BY: GE, SYLVANIA	26W	–	DIMMABLE LUTRON ECOSYSTEM AND ON PHOTOCELL CONTROL.
PF1	PENDANT MOUNTED 28 WATT LINEAR T5 FLUORESCENT STRIPLIGHT WITH CHAIN MOUNTING AND WIRE GUARD	SUPPORT SPACES	LIGHTOLIER SV-4-S-1-28-UNV-PG-SV5GXW4	PHILIPS (1)F28T5/ADV830 /ALTO OR EQUAL BY: GE, SYLVANIA	28W	–	
RD1	RECESSED 1500 LUMEN 300K WARM WHITE LED DOWNLIGHT WITH 4: ROUND APERTURE	THROUGHOUT	LIGHTOLIER FRAM-IN KIT: C6L15-N-VOLTS	WARM WHITE LED INCLUDED	27W	–	
RD2	RECESSED 400 LUMEN 3000K WARM WHITE LED DOWNLIGHT WITH SMALL 2" ROUND APERTURE AND WET LABELED DOWNLIGHT WITH PAINTED WHITE TRIM	ENTRY CEILINGS	LIGHTOILER FRAME-IN KIT: C2L04DL-30K-17-R-1 REFLECTOR: CL2-DL-WH-P	WARM WHITE LED INCLUDED	10W	–	
RD3	RECESSED 1500 LUMEN 3000K WARM WHITE LED DOWNLIGHT WITH 4" ROUND APERTURE AND GLASS TRIM	THROUGHOUT	LIGHTOLIER DECORATIVE TRIM: D6A01 FRAME-IN KIT: C6L15-N-VOLTS	WARM WHITE LED INCLUDED	27W	–	
RF2	RECESSED 28 WATT LINEAR T5 FLUORESCENT 4" BY 4' DOWNLIGHT WITH ACRYLIC LENS	IT AND BACK OF HOUSE AREAS	LIGHTOLIER CT3-F-P-A-S-4-U-VOLTS	PHILIPS (1)F28T5/ADV830 /ALTO OR EQUAL BY: GE, SYLVANIA	28W	–	
RF3	RECESSED 28 WATT LINEAR T5 FLUORESCENT 4" BY 4' WET LABEL DOWNLIGHT WITH ACRYLIC LENS	EXTERIOR SOFFIT	AXIS LIGHTING WBR-F-4-T5-1-W-VOLTS-ERS-1-TF	PHILIPS (1)F28T5/ADV830 /ALTO OR EQUAL BY: GE, SYLVANIA	28W	–	
RZ1	RECESSED (2) LAMP 28 WATT LINEAR T5 FLUORESCENT DOWNLIGHT WITH (2) ADJUSTABLE WARM WHITE LED ACCENT LIGHTS	THROUGHOUT	PINNACLE EDGE EX4	PHILIPS LINEAR FLUORESCENT: (2)F28T5/ADV830 /ALTO OR EQUAL BY: GE, SYLVANIA LED DOWNLIGHT: WARM WHITE LEDS INCLUDED	ALLOW 96W	–	DIMMABLE VIA LUTRON H SERIES ECOSYSTEM FOR FLUORESCENT LIGHTING AND ECOSYSTEM DRIVER FOR LED DOWNLIGHTS. FLUORESCENT AND DOWNLIGHT FIXTURES ON SEPARATE CIRCUITS, AND INDIVIDUALLY CONTROLLED.
RZ1o	SAME AS RZ1 BUT WITH 3' LINEAR T5 FLUORESCENT DOWNLIGHT	WORKROOM	PINNACLE EDGE EX4	PHILIPS LINEAR FLUORESCENT: (2)F28T5/ADV830 /ALTO OR EQUAL BY: GE, SYLVANIA LED DOWNLIGHT: WARM WHITE LEDS INCLUDED	ALLOW 82W	–	DIMMABLE VIA LUTRON H SERIES ECOSYSTEM FOR FLUORESCENT LIGHTING AND ECOSYSTEM DRIVER FOR LED DOWNLIGHTS. FLUORESCENT AND DOWNLIGHT FIXTURES ON SEPARATE CIRCUITS, AND INDIVIDUALLY CONTROLLED.
SD1	SURFACE MOUNTED WARM WHITE LINEAR LED STRIPLIGHT SUITABLE FOR EXTERIOR APPLICATIONS	BOOK DROP-OFF	TIVOLI LIGHTING LED STRIP: TBL-O-WWH-2-MD-12-PSU MOUNTING ACCESSORY: TPL-TUBE-C/F-B	WARM WHITE LED INCLUDED	1.15W /FT.	–	CONTRACTOR TO PROVIDE ALL NECESSARY WIRING ACCESSORIES AS NEEDED. CONTRACTOR TO VERIFY LENGTH ON SITE.
SF1	SURFACE MOUNTED LOW PROFILE T5 FLUORESCENT STRIPLIGHT WITHIN VOCE WITH LUTRON ECOSYSTEM DIMMABLE BALLAST	SKYLIGHTS	LIGHTOILER SN-4-S-1-28-HPF-VOLTS- LUTRON H-SERIES ECOSYSTEM BALLAST	PHILIPS (1)F28T5/ADV830 /ALTO OR EQUAL BY: GE, SYLVANIA	ALLOW 7W/FT.	–	DIMMABLE VIA LUTRONH-SERIES ECOSYSTEM AND ON PHOTOCELL CONTROL.
SF1o	SURFACE MOUNTED 3'-0" 21 WATT LINEAR T5 FLUORESCENT STRIPLIGHT WITHIN COVE WITH LUTRON ECOSYSTEM DIMMABLE BALLAST	GROUP STUDY ROOMS	LIGHTOILER SN-3-S-1-21-HPF-VOLTS- LUTRON H-SERIES ECOSYSTEM BALLAST	PHILIPS (1)F21T5/ADV830 /ALTO OR EQUAL BY: GE, SYLVANIA	21W	–	CONTRACTOR TO VERIFY LENGTH OF FIXTURE ON SIGHT. DIMMABLE VIA LUTRON H-SERIES ECOSYSTEM AND ON PHOTOCELL CONTROL.

LIGHTING FIXTURE SCHEDULE

TYPE	DESCRIPTION	LOCATION	MANUFACTURER & CATOLOG #	NUMBER OF LAMPS & TYPE	TOTAL WATTS	VOLTAGE	REMARKS
SF2	SURFACE MOUNTED 28 WATT T5 FLUORESCENT UNDER CABINET STRIPLIGHT	STAFF ROOM	HE WILLIAMS 1SF-4-128T5S-A12125-EB1-VOLTS	PHILIPS (1)F28T5/ADV830 /ALTO OR EQUAL BY: GE, SYLVANIA	ALLOW 7W/FT.	–	
WC1	WALL MOUNTED (2) LAMP 26 WATT COMPACT FLUORESCENT VANITY LIGHT	RESTROOM	LOUIS POULSEN AJE-17.7-2/26/CF-VOLTS-WHT-WALL	PHILIPS (2)PL-C 26W/830/ALTO OR EQUAL BY: GE, SYLVANIA	42W	–	
WD1	WALL MOUNTED WARM WHITE LED FLOODLIGHTS	COMMUNITY ROOM EXTERIOR WALL	LUMENPULSE LBM-VOLTS-30K-FL-BK-DIM	WARM WHITE LEDS INCLUDED	ALLOW 40W	–	DIMMABLE VIA 0-10VOLT CONTROL.
WD2	WALL RECESSED LED STEP LIGHT WITH 12.5" BY 2.75" RECTANGULAR APERTURE	LANDSCAPE STEPS	BEGA 2384 LED	WARM WHITE LED INCLUDED	10W	–	
WD3	WALL RECESSED 1000 LUMEN 3000K WARM WHITE LED ACCENT LIGHT WITH SPOT REFLECTOR WITH 8 1/2" BY 7 5/8" RECTANGULAR APERTURE WITH WHITE POWDER COAT 3/4" TRIM AND DOUBLE GIMBAL RING	COMMUNITY ROOM	ARCHITECTURAL LIGHTING WORKS RCST-1-XC8030-1000-H-INT-S-VOLTS-WH-SOL	WARM WHITE LEDS INCLUDED	15W	–	FIXTURE MOUNTED WITHIN THE VERTICAL WALL WITHIN THE COMMUNITY ROOM SKYLIGHT. PROVIDE WITH DIFFUSE SOLITE LENS. DIMMABLE VIA 0-10 VOLT CONTROL.
WF1	STACK MOUNTED 28 WATT LINEAR T5 FLUORESCENT 4' STACK LIGHT WITH LOW PROFILE ASYMMETRIC DISTRIBUTION WITH LUTRON ECOSYSTEM DIMMABLE BALLAST	STACKS	VODE LIGHTING WG-K1-4C-ST-24-IB-B-VOLTS-0-HE-A-1-2-LUTRON ECOSYSTEM BALLAST	PHILIPS (1)F28T5/ADV830 /ALTO OR EQUAL BY: GE, SYLVANIA	28W	–	DIMMABLE VIA LUTRON H-SERIES ECOSYSTEM AND PHOTOCELL CONTROL. FIXTURE TO BE CANTILEVERED OUT 12" INCHES FROM THE FACE OF THE STACKS.
WF1a	SA,E AS WF1 BIT WITH 3' FIXTURE LENGTH	STACKS	VODE LIGHTING WG-K1-3C-ST-24-IB-B-VOLTS-0-HE-A-1-2- LUTRON ECOSYSTEM BALLAST	PHILIPS (1)F21T5/ADV830 /ALTO OR EQUAL BY: GE, SYLVANIA	21W	–	DIMMABLE VIA LUTRON H-SERIES ECOSYSTEM AND PHOTOCELL CONTROL. FIXTURE TO BE CANTILEVERED OUT 12" INCHES FROM THE FACE OF THE STACKS.
WF2	STACK MOUNTED (2) 28 WATT LINEAR T5 FLUORESCENT 4' STACK LIGHT WITH LOW PROFILE ASYMMETRIC DISTRIBUTION WITH LUTRON ECOSYSTEM DIMMABLE BALLAST	STACKS	VODE LIGHTING WG-K2-4C-ST-24-IB-B-VOLTS-0-HE-A-1-2- LUTRON ECOSYSTEM BALLAST	PHILIPS (1)F28T5/ADV830 /ALTO OR EQUAL BY: GE, SYLVANIA	54W	–	DIMMABLE VIA LUTRON H-SERIES ECOSYSTEM AND PHOTOCELL CONTROL. FIXTURE TO BE CANTILEVERED OUT 12" INCHES FROM THE FACE OF THE STACKS.
WF2a	SAME AS WF2 BUT WITH 3' FIXTURE LENGTH	STACKS	VODE LIGHTING WG-K2-3C-ST-24-IB-B-VOLTS-0-HE3-A-1-2- LUTRON ECOSYSTEM BALLAST	PHILIPS (1)F28T5/ADV830 /ALTO OR EQUAL BY: GE, SYLVANIA	42W	–	DIMMABLE VIA LUTRON H-SERIES ECOSYSTEM AND PHOTOCELL CONTROL. FIXTURE TO BE CANTILEVERED OUT 12" INCHES FROM THE FACE OF THE STACKS.
WF3	STACK MOUNTED 28 WATT LINEAR T6 FLUORESCENT 4' STACK LIGHT WITH LOW PROFILE ASYMMETRIC DISTRIBUTION MOUNTED ON CUSTOM 15" VERTICAL STRUT SYSTEM WITH LUTRON ECOSYSTEM DIMMABLE BALLAST	LOWER STACKS	VODE LIGHTING FIXTURE: WG-K2-4C-ST-24-IB-B-VOLTS-0-HE-A-1-2- LUTRON ECOSYSTEM BALLAST STRUT: TO BE DETERMINED	PHILIPS (1)F28T5/ADV830 /ALTO OR EQUAL BY: GE, SYLVANIA	54W	–	DIMMABLE VIA LUTRON H-SERIES ECOSYSTEM AND PHOTOCELL CONTROL. FIXTURE TO BE MOUNTED ON A 15" VERTICAL STRUT SYSTEM PROVIDED BY VODE. FIXTURE TO BE CANTILEVERED OUT 12" INCHES FROM THE FACE OF THE STACKS.
WF3o	SAME AS WF3 BUT WITH 3' FIXTURE LENGTH	LOWER STACKS	VODE LIGHTING FIXTURE: WG-K2-3C-ST-24-IB-B-VOLTS-0-HE3-A-1-2- LUTRON ECOSYSTEM BALLAST STRUT: TO BE DETERMINED	PHILIPS (1)F21T5/ADV830 /ALTO OR EQUAL BY: GE, SYLVANIA	42W	–	DIMMABLE VIA LUTRON H-SERIES ECOSYSTEM AND PHOTOCELL CONTROL. FIXTURE TO BE MOUNTED ON A 15" VERTICAL STRUT SYSTEM PROVIDED BY VODE. FIXTURE TO BE CANTILEVERED OUT 12" INCHES FROM THE FACE OF THE STACKS.
CDS1	RECESSED 1500 LUMEN 3000K WARM WHITE LED DOWNLIGHT WITH 4" ROUND APERTURE AND GLASS TRIM	THROUGHOUT	LUTRON LRFX-DCRB	NA	NA	–	ALLOW FOR (8) SENSORS.
CWS1	WALL RECESSED ECOSYSTEM GRAFIK EYE ROOM CONTROLLER AND DIMMER WITH 4 SCENE PRESET AND INTEGRAL ASTRONOMICAL TIME CLOCK CONNECTED TO DAYLIGHT SENSORS.	THROUGHOUT	LUTRON GRAFIK EYE QS WITH ECOSYSTEM	NA	NA	–	QUANTITY TO BE DETERMINED BASED OF TOTAL NUMBER OF ZONES. ALLOW FOR (2) 16 ZONE GRAFIK EYES.
CWS2	WALL RECESSED 2-BUTTON WITH RAISE/LOWER SWITCH	THROUGHOUT	LUTRON 2BLR	NA	NA	–	ALLOW FOR (2) SWITCHES.

FIXTURE SCHEDULE NOTES

1. CONTRACTOR TO VERIFY FIXTURE TYPES, LAMPING, AND ADDITIONAL FIXTURE INFORMATION WITH LIGHTING DESIGNER SPECIFICATIONS.

PICO BRANCH LIBRARY

2201 Pico Blvd.
Santa Monica, CA 90404

PROJECT

KoningEizenbergArchitecture
1454 25th St, Santa Monica, CA 90404
310.828.6131 info@kearch.com
310.828.0719 fax www.kearch.com

ARCHITECT'S PROJECT NO. **1001**

ARCHITECT

All designs, ideas, arrangements and plans indicated by these drawings are the property and copyright of the Architect and shall neither be used on any other work nor be disclosed to any other person for any use whatsoever without written permission.

Koning Eizenberg Architecture and/or its principals and employees waives any and all liability or responsibility for problems that may occur when these plans, drawings, specifications, and/or designs are followed without the professional's guidance with ambiguities, or conflicts which are alleged.

REGISTERED PROFESSIONAL ENGINEER JACOB CHAN No. E13358 Exp. 09-30-12 ELECTRICAL STATE OF CALIFORNIA

GLUMAC
617 W. 7th Street, Suite 500
Los Angeles, CA 90017
T. 213.239.8866 F. 213.239.8816
www.glumac.com
Job No.:
Contact:
engineers for a sustainable future™

CONSULTANT

City of Santa Monica Architecture Services
1437 4TH STREET, SUITE 300
SANTA MONICA, CA 90401
TEL. (310) 458-2205
FAX. (310) 399-1541
architecture@smgov.net

DATE: _____ 20__
SUBMITTED BY:

DATE: _____ 20__
APPROVED BY: Miriam Mulder, Architecture Services Manager
CITY OF SANTA MONICA DEPARTMENT OF PUBLIC WORKS

REVIEWED BY: DATE: _____ 20__
REVIEWED BY: DATE: _____ 20__
REVIEWED BY: DATE: _____ 20__

CITY CLIENT

NO.	DATE	BY	DESCRIPTION

REVISIONS

ISSUE
65% CONSTRUCTION DOCUMENTS / BID SET
DATE 01/23/2012
DRAWING NO. **6693**
SHEET OF SHEETS
SHEET TITLE
TITLE24/LIGHTING FIXTURE SCHEDULE
SHEET NO.
E0.3

SHEET OF
DWG. NO. -
TITLE OF PROJECT:

CERTIFICATE OF COMPLIANCE (Part 1 of 4) LTG-1C

Project Name: PICO BRANCH LIBRARY (SMALL BLDG.)
Date: February 28, 2011
Project Address: VIRGINIA AVENUE PARK, SANTA MONICA, CA 90404
Climate Zone
Building GFA
Unconditioned Floor Area

Building Type: ☐ NON RESIDENTIAL ☐ HIGH RISE RESIDENTIAL ☐ HOTEL/MOTEL GUEST ROOMS ☐ SCHOOLS ☐ REGULAR RESIDENTIAL ☐ UNCONDITIONED SPACES ☐ UNCONDITIONED SPACES
Phase of Construction: ☒ NEW CONSTRUCTION ☐ ADDITION ☐ ALTERATION
Method of Compliance: ☐ COMPLETE BUILDING ☒ AREA CATEGORY ☐ TAILORED

DOCUMENTATION AUTHOR'S DECLARATION STATEMENT

* I certify that this Certificate of Compliance documentation is accurate and complete.

Name: JACOB CHAN | Signature:
Company: GLUMAC | Date: February 28, 2011
Address: 617 WEST 7TH STREET, 5TH FLOOR | DA # / CEPE #:
City/State/Zip: LOS ANGELES, CA 90017-3830 | Phone #: (213) 239-8866

Principal Lighting Designer's Declaration Statement

* I am eligible under Division 3 of the California Business and Professions Code to accept responsibility for the lighting design.
* This Certificate of Compliance identifies the lighting features and performance specifications required for compliance with Title 24, Parts 1 and 6 of the California Code of Regulations.
* The design features represented on this Certificate of Compliance are consistent with the information provided to document this design on the other applicable compliance forms, worksheets, calculations, plans and specifications submitted to the enforcement agency for approval with this building permit application.

Name: JACOB CHAN | Signature:
Company: GLUMAC | Phone #: (213) 239-8866
Address: 617 WEST 7TH STREET, 5TH FLOOR | License # : E13358
City/State/Zip: LOS ANGELES, CA 90017-3830 | Date: February 28, 2011

LIGHTING MANDATORY MEASURES

Indicate location on building plans of Mandatory Measures Not

LIGHTING COMPLIANCE FORMS & WORKSHEET (check box if worksheet is included)

For detailed instructions on the use of this and all Energy Efficiency Standards compliance forms, please refer to the Nonresidential Manual published by the California Energy Commission.

- ☒ LTG-1C Pages 1 to 4 — Certificate of Compliance. All pages required on plans for all submittals
- ☒ LTG-2A — Lighting Controls Credit Worksheet
- ☒ LTG-3C — Indoor Lighting Power Allowance
- ☐ LTG-4C Pages 1 to 4 — Tailored Method Worksheet
- ☐ LTG-5C Pages 1 and 2 — Line Voltage Track Lighting Worksheet

CERTIFICATE OF COMPLIANCE (Part 2 of 4) (CONDITIONED) LTG-1C

Project Name: PICO BRANCH LIBRARY (SMALL BLDG.)
Date: February 28, 2011

INDOOR LIGHTING SCHEDULE and FIELD INSPECTION ENERGY CHECKLIST

Installation Certificate, LTG-1-INST (Retain a copy and verify form is completed and signed) — Field Inspector ☐
Certificate of Acceptance, LTG-2A (Retain a copy and verify form is completed and signed) — Field Inspector ☐

A separate Lighting Schedule Must Be Filled Out for Conditioned and Unconditioned Spaces. Installed Lighting Power Listed on this Lighting Schedule is for:
☒ CONDITIONED SPACE ☐ UNCONDITIONED SPACE

☐ The actual indoor lighting power listed below includes all installed permanent and portable lighting systems in accordance with 146(a).

☐ Only for offices: Up to the first 0.2 watts per square foot of portable lighting shall not be required to be included in the calculation of actual indoor lighting power density in accordance with the Exception to 146(a). All portable lighting in excess of 0.2 watts per square foot is totaled below.

LUMINAIRE (TYPE, LAMPS, BALLASTS)			INSTALLED WATTS						
A	B	C	D	E		F	G	H	
Name or Item Tag	Complete Luminaire Description (i.e. 3 lamp fluorescent troffer, F32T8, one dimmable electronic ballast)	Special Features	Watts per Luminaire (1)	How wattage was determined: CEC Default from NA8	How wattage was determined: According to 130 (d or e)	Number of Luminaires	Installed Watts (D x F)	Field Inspector (2): Pass	Field Inspector (2): Fail
RZ1	RECESSED LINEAR 2 LAMP T5	☐	96	☒	☐	34	3264	☐	☐
SF1	SURFACE MOUNTED T-5 FLOURESCENT	☐		☒	☐			☐	☐
RD1	RECESSED WARM LED 4"	☐	22	☒	☐	13	286	☐	☐
PF1	PENDANT MOUNTED SINGLE LAMP	☐	30	☒	☐			☐	☐
WF1	RECESSED LINEAR 2 LAMP T5	☐	4	☒	☐	52	208	☐	☐
RF2	RECESSED CIRCULAR T5 4' DIAM.	☐	80	☒	☐	5	400	☐	☐
RD3	RECESSED DOWN LIGHT 4" ROUND	☐	22	☒	☐	6	132	☐	☐
DT1	TABLE LAMPS PERMANENT	☐	60	☒	☐	19	1140	☐	☐
WC1	WALL MOUNTED COMP. FLOURESCENT	☐	36	☒	☐	10	360	☐	☐
PD1	PENDANT MOUNTED SINGLE LAMP T5	☐	30	☒	☐	26	780	☐	☐
		☐		☒	☐			☐	☐
		☐		☐	☐			☐	☐
		☐		☐				☐	☐

INSTALLED WATTS PAGE TOTAL: 6570

Building total number of pages: ____

INSTALLED WATTS BUILDING TOTAL (Sum of all pages): 6570
Enter into LTG-1C Page 4 of 4

1 Wattage shall be determined according to Section 130(d and e). Wattage shall be rating of light fixture, not rating of bulb.
2 If Fail then describe on Page 2 of the Inspection Checklist Form and take appropriate action to correct. Verify building plans if necessary.

CERTIFICATE OF COMPLIANCE (Part 4 of 4) LTG-1C

Project Name: PICO BRANCH LIBRARY (SMALL BLDG.)
Date: February 28, 2011

CONDITIONED AND UNCONDITIONED SPACE LIGHTING MUST NOT BE COMBINED FOR COMPLIANCE

Indoor Lighting Power Conditioned Spaces		Watts	Indoor Lighting Power Unconditioned Spaces		Watts
Installed Lighting (from Conditioned LTG-1C Page 2)		6570	Installed Lighting (from Unconditioned LTG-1C Page 2)		0
Lighting Control Credit (from Conditioned Spaces LTG-2C)		0	Lighting Control Credit (from Unconditioned Spaces LTG-2C)		0
Adjusted Installed Lighting Power	=	6,570	Adjusted Installed Lighting Power	=	0
Complies if Installed <= Allowed		YES	Complies if Installed <= Allowed		YES
Allowed Lighting Power Conditioned Spaces (from LTG-3C)		8,184	Allowed Lighting Power Unconditioned Spaces (from LTG-3C)		0

REQUIRED ACCEPTANCE TEST

Designer:
This form is to be used by the designer and attached to the plans. Listed below is the acceptance test for the Lighting system, **LTG-2A**. The designer is required to check the acceptance tests and list all controls devices serving the building or space shall be certified as meeting the Acceptance Requirements for Code Compliance. If all the lighting system or control of a certain type requires a test, list the different lighting and the number of systems. The NA7 Section in the Appendix of the Nonresidential Reference Appendices Manual describes the test. Since this form will be part of the plans, completion of this section will allow the responsible party to budget for the scope of work appropriately. **Forms can be grouped by type of Luminaire controlled.**

Enforcement Agency:
Systems Acceptance. Before Occupancy Permit is granted for a newly constructed building or space or when ever new lighting system with controls is installed in the building or space shall be certified as meeting the Acceptance Requirements. The **LTG-2A** form is not considered a complete form and is not to be accepted by the enforcement agency unless the boxes are checked and/or filled and signed. In addition, a Certificate of Acceptance forms shall be submitted to the enforcement agency that certifies plans, specifications, installation certificates, and operating and maintenance information meet the requirements of 10-103(b) of Title 24 Part 6. The field inspector must receive the properly filled out and signed forms before the building can receive final occupancy. A copy of the **LTG-2A** for each different lighting luminaire control(s) must be provided to the owner of the building for their records.

Equipment Requiring Testing	Luminaires Controlled: Description	Luminaires Controlled: Number of like Controls	Location	LTG-2A: Controls and Sensors and Automatic Day Lighting Controls Acceptance
				☐
				☐
				☐
				☐
				☐
				☐
				☐
				☐

INDOOR LIGHTING POWER ALLOWANCE LTG-3-C

Project Name: PICO BRANCH LIBRARY (SMALL BLDG.)
Date: February 28, 2011

ALLOWED LIGHTING POWER (Choose One Method)

A separate LTG-3C must be filled out for Conditioned and Unconditioned Spaces. Indoor Lighting Power Allowances listed on this page are only for: ☒ CONDITIONED Spaces ☐ UNCONDITIONED Spaces

COMPLETE BUILDING METHOD - CONDITIONED SPACES

BUILDING CATEGORY (From 146 Table 146-E)	WATTS PER SF	COMPLETE BLDG. AREA	ALLOWED WATTS

AREA CATEGORY METHOD - CONDITIONED SPACES

A: AREA CATEGORY (From 146 Table 146-F)	B: WATTS PER SF	C: AREA (SF)	D: ALLOWED WATTS
CONFERENCE (1)	1.4	1,184	1,658
LIBRARY; STACKS	1.5	1,345	2,018
CORRIDORS, RESTROOMS, STAIRS, & SUPPORT AREAS	0.6	744	446
ELECTRICAL, MECHANICAL, TELEPHONE ROOMS (2)	0.7	106	74
LOUNGE / RECREATION	1.1	172	189
LIBRARY; READING AREAS	1.2	3,166	3,799
Area Category Method Page TOTALS		6,717	8,184
Sum of Additional Allowed Watts from Area Category Method - Part B (from table below)			
Total Pages for Area Category Method ____ Area Category Method Project TOTALS		6,717 SF Areas	8,184 WATTS

AREA CATEGORY METHOD - Part B Additional Wattage Allowance (from Table 146-F Footnotes)

A: Primary Function	B: sf	C: Additional Watts per sf Allowed	D: Wattage allowance (BxC)	E: Description(s) and Quantity of Special Luminaire (2) Types in each Primary Function Area	F: Total Design Watts	G: ALLOWED WATTS Smaller of
TOTALS - Enter into Area Category Method - Part A (table above)						WATTS

1. Additional watts available only when allowed according to the footnotes on bottom of Table 146-F for chandelier or sconce; art; craft; assembly or manufacturing specialized task work; precision commercial/industrial work; or lab specialized task work.
2. Special luminaires are light fixtures described in the Table 146-F Footnotes that are subject to an additional wattage allowance.

TAILORED METHOD

Total Allowed Watts using the Tailored Method taken from LTG-4C (Page 1 of 4) Row 3

The indoor lighting power allowance using the Tailored Method of Compliance shall be determined using the LTG-4C set of forms. A separate set of LTG-4C forms shall be filled out for CONDITIONED and UNCONDITIONED spaces

MANDATORY MEASURES

Project Name: PICO BRANCH LIBRARY (SMALL BLDG.)

- ☐ §131(d) **BUILDING SHUT-OFF**
  THE BUILDING LIGHTING SHUT-OFF SYSTEM CONSISTS OF AN AUTOMATIC TIME SWITCH, WITH A ZONE FOR EACH FLOOR.
- ☒ §131(c) **OVERRIDE FOR BUILDING LIGHTING SHUT-OFF**
  THE AUTOMATIC BUILDING SHUT-OFF SYSTEM IS PROVIDED WITH A MANUAL, ACCESSIBLE OVERRIDE SWITCH IN SIGHT OF THE LIGHTS. THE AREA OF OVERRIDE IS NOT TO EXCEED 5,000 SQ. FT.
- ☒ §131(c) **AUTOMATIC CONTROL DEVICES CERTIFIED:**
  ALL AUTOMATIC CONTROL DEVICES SPECIFIED ARE CERTIFIED.
  ALL ALTERNATE EQUIPMENT SHALL BE CERTIFIED AND INSTALLED AS DIRECTED BY THE MANUFACTURER.
- ☒ §131(c) **FLUORESCENT BALLAST AND LUMINARIES CERTIFIED:**
  ALL FLUORESCENT FIXTURES SUBJECT TO CERTIFICATION AND SPECIFIED FOR THE PROJECTS ARE CERTIFIED.
- ☒ §131(c) **INDIVIDUAL ROOM/AREA CONTROLS:**
  EACH ROOM AND AREA IN THIS BUILDING IS EQUIPPED WITH A SEPARATE SWITCH OR OCCUPANCY SENSOR DEVICE FOR EACH AREA WITH FLOOR-TO-CEILING WALLS.
- ☒ §131(e) **UNIFORM REDUCTION FOR INDIVIDUAL ROOMS:**
  ALL ROOMS AND AREAS GREATER THAN 100 SQUARE FEET AND MORE THAN 0.8 WATTS PER SQUARE FOOT OF LIGHTING LOAD SHALL BE CONTROLLED WITH MULTI-LEVEL SWITCHING FOR UNIFORM REDUCTION OF LIGHTING WITHIN THE ROOM.
- ☒ §131(c) **DAYLIT AREA CONTROL:**
  ALL ROOMS THAT ARE GREATER THAN 250 SQUARE FEET AND CONTAIN WINDOWS AND SKYLIGHTS, THAT ALLOW FOR THE EFFECTIVE USE OF DAYLIGHT IN THE AREA SHALL HAVE 50% OF THE LIGHTING POWER IN EACH DAYLIT AREA CONTROLLED BY A SEPARATE SWITCH; OR
- ☐ §131(c) THE EFFECTIVE USE OF DAYLIGHT CANNOT BE ACCOMPLISHED BECAUSE THE WINDOWS ARE CONTINUOUSLY SHADED BY A BUILIDING ON THE ADJACENT LOT. DIAGRAM OF SHADING DURING DIFFERENT TIMES OF THE YEAR IS INCLUDED ON PLANS.
- ☐ §131(e) **DISPLAY LIGHTING:**
  DISPLAY LIGHTING SHALL BE SEPARATELY SWITCHED ON CIRCUITS THAT ARE 20 AMPS OR LESS.

PICO BRANCH LIBRARY

2201 Pico Blvd.
Santa Monica, CA 90404

PROJECT

KoningEizenberg Architecture
1454 25th St, Santa Monica, CA 90404
310.828.6131 info@kearch.com
310.828.0719 fax www.kearch.com

ARCHITECT'S PROJECT NO. **1001**

ARCHITECT

All designs, ideas, arrangements and plans indicated by these drawings are the property and copyright of the Architect and shall neither be used on any other work nor be disclosed to any other person for any use whatsoever without written permission.

Koning Eizenberg Architecture and/or its principals and employees waives any and all liability or responsibility for problems that may occur when these plans, drawings, specifications, and/or designs are followed without the professional's guidance with ambiguities, or conflicts which are alleged.

REGISTERED PROFESSIONAL ENGINEER — JACOB CHAN — No. E13358 — Exp. 09-30-12 — ELECTRICAL — STATE OF CALIFORNIA

GLUMAC
617 W. 7th Street, Suite 500
Los Angeles, CA 90017
T. 213.239.8866 F. 213.239.8816
www.glumac.com
Job No.:
Contact:
engineers for a sustainable future™

CONSULTANT

City of Santa Monica Architecture Services
1437 4TH STREET, SUITE 300
SANTA MONICA, CA 90401
TEL. (310) 458-2205
FAX. (310) 399-1541
architecture@smgov.net

SUBMITTED BY: ____ DATE: ____ 20__

APPROVED BY: Miriam Mulder, Architecture Services Manager — DATE: ____ 20__

CITY OF SANTA MONICA
DEPARTMENT OF PUBLIC WORKS

REVIEWED BY: ____ DATE: ____ 20__

REVIEWED BY: ____ DATE: ____ 20__

REVIEWED BY: ____ DATE: ____ 20__

CITY CLIENT

NO.	DATE	BY	DESCRIPTION

REVISIONS

ISSUE
65% CONSTRUCTION DOCUMENTS / BID SET

DATE
01/23/2012

DRAWING NO. **6693**

SHEET ____ OF ____ SHEETS

SHEET TITLE
TITLE 24 LIGHTING

SHEET NO.
E0.4

SHEET OF
DWG. NO. -
TITLE OF PROJECT:

SHEET OF

DWG NO. -

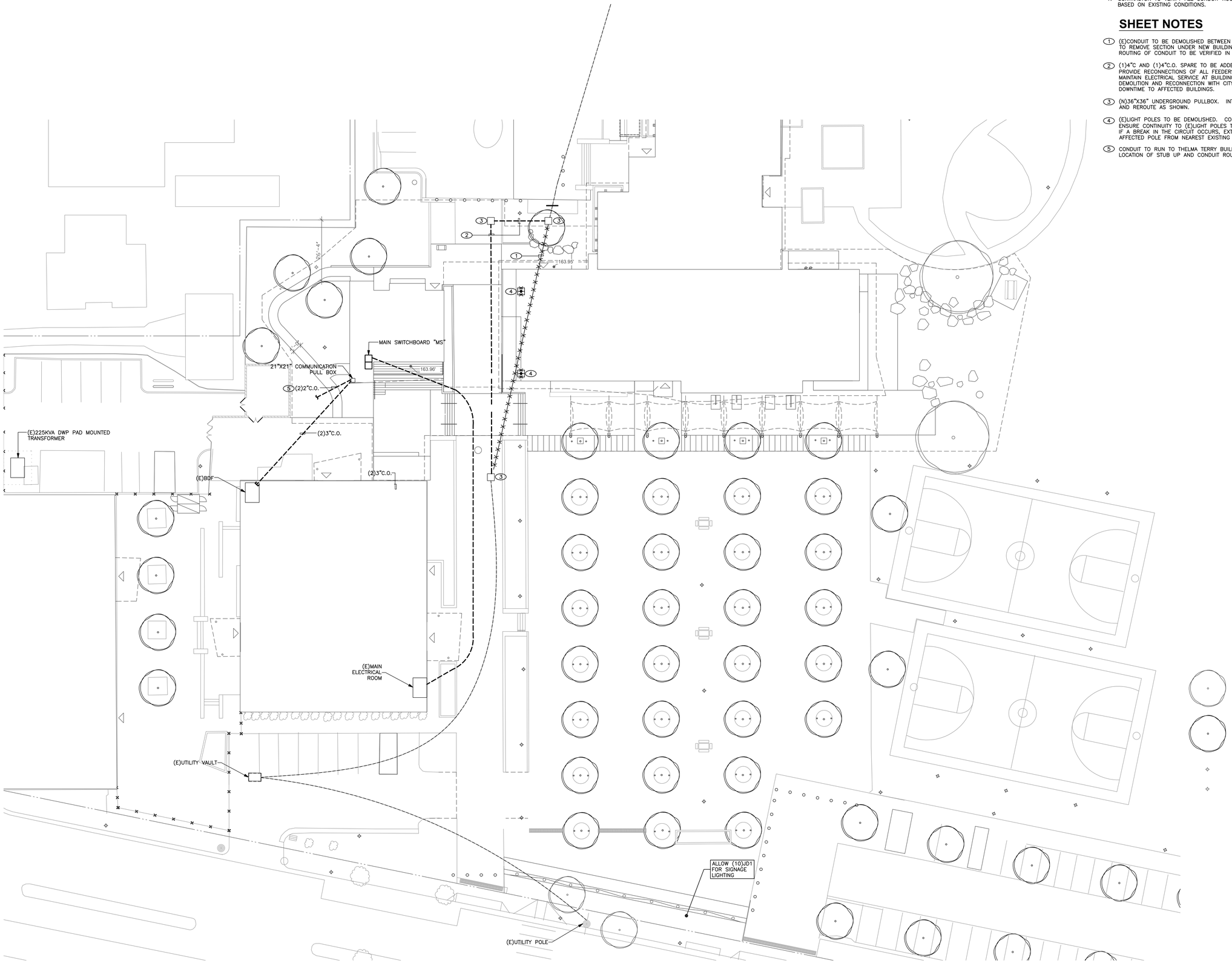

1 **ELECTRICAL SITE PLAN**
SCALE: 1/16"=1'-0"

0 8' 16' 32'

GENERAL NOTES

1. CONTRACTOR TO VERIFY ALL CONDUIT ROUTING IN FIELD BASED ON EXISTING CONDITIONS.

SHEET NOTES

1. (E)CONDUIT TO BE DEMOLISHED BETWEEN NEW PULL BOXES TO REMOVE SECTION UNDER NEW BUILDING FOOTING. EXACT ROUTING OF CONDUIT TO BE VERIFIED IN FIELD.
2. (1)4"C AND (1)4"C.O. SPARE TO BE ADDED AS SHOWN. PROVIDE RECONNECTIONS OF ALL FEEDERS AT (E)PULLBOX TO MAINTAIN ELECTRICAL SERVICE AT BUILDING. COORDINATE DEMOLITION AND RECONNECTION WITH CITY TO MINIMIZE DOWNTIME TO AFFECTED BUILDINGS.
3. (N)36"X36" UNDERGROUND PULLBOX. INTERCEPT (E)CONDUIT AND REROUTE AS SHOWN.
4. (E)LIGHT POLES TO BE DEMOLISHED. CONTRACTOR TO ENSURE CONTINUITY TO (E)LIGHT POLES THAT ARE REMAINING. IF A BREAK IN THE CIRCUIT OCCURS, EXTEND CIRCUIT TO AFFECTED POLE FROM NEAREST EXISTING POLE TO REMAIN.
5. CONDUIT TO RUN TO THELMA TERRY BUILDING. VERIFY EXACT LOCATION OF STUB UP AND CONDUIT ROUTING WITH OWNER.

PICO BRANCH LIBRARY

2201 Pico Blvd.
Santa Monica, CA 90404

PROJECT

KoningEizenbergArchitecture
1454 25th St, Santa Monica, CA 90404

310.828.6131 info@kearch.com
310.828.0719 fax www.kearch.com

ARCHITECT'S PROJECT NO.
1001

ARCHITECT

All designs, ideas, arrangements and plans indicated by these drawings are the property and copyright of the Architect and shall neither be used on any other work nor be disclosed to any other person for any use whatsoever without written permission.

Koning Eizenberg Architecture and/or its principals and employees waives any and all liability or responsibility for problems that may occur when these plans, drawings, specifications, and/or designs are followed without the professional's guidance with ambiguities, or conflicts which are alleged.

REGISTERED PROFESSIONAL ENGINEER
JACOB CHAN
No. E13358
Exp. 09-30-12
ELECTRICAL
STATE OF CALIFORNIA

GLUMAC
617 W. 7th Street, Suite 500
Los Angeles, CA 90017
T. 213.239.8866 F. 213.239.8816
www.glumac.com
Job No.:
Contact:

engineers for a sustainable future™

CONSULTANT

City of Santa Monica
Architecture Services
1437 4TH STREET, SUITE 300
SANTA MONICA, CA 90401
TEL. (310) 458-2205
FAX. (310) 399-1541
architecture@smgov.net

DATE : _____ 20 __
SUBMITTED BY :

DATE : _____ 20 __
APPROVED BY :
Miriam Mulder,
Architecture Services Manager

CITY OF SANTA MONICA
DEPARTMENT OF PUBLIC WORKS

REVIEWED BY : DATE : _____ 20 __

REVIEWED BY : DATE : _____ 20 __

REVIEWED BY : DATE : _____ 20 __

CITY CLIENT

NO.	DATE	BY	DESCRIPTION

REVISIONS

ISSUE
65% CONSTRUCTION DOCUMENTS / BID SET

DATE
01/23/2012

DRAWING NO. **6693**

SHEET OF SHEETS

SHEET TITLE
ELECTRICAL SITE PLAN

SHEET NO.
E1.0

TITLE OF PROJECT

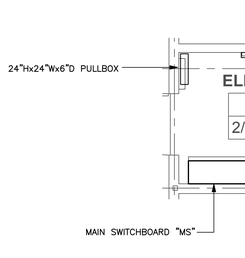

2 ENLARGED ELECTRICAL ROOM

SCALE: 1/8"=1'-0"

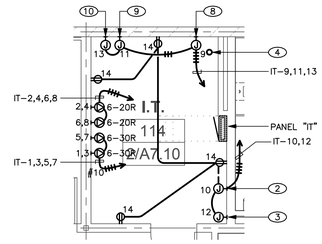

3 ENLARGED IT ROOM

SCALE: 1/8"=1'-0"

GENERAL NOTES

1. ELECTRICAL CONTRACTOR TO PROVIDE 120V CONNECTION TO ACTUATORS. LOW VOLTAGE TRANSFORMER TO BE PROVIDED BY DIV 23 CONTROLS.
2. COORDINATE WITH MECHANICAL EXACT LOCATION OF EQUIPMENT. PRE-INSTALLATION POWER & TERMINATION REQUIREMENTS.
3. THE DESIGN OF THE UNDERFLOOR AIR DISTRIBUTION SYSTEM IS BASED ON A SEALED, AIRTIGHT UNDERFLOOR PLENUM. ALL CONSTRUCTION JOINTS AT PLENUM BOUNDARIES AND PLENUM DIVIDING PARTITIONS SHALL BE SEALED AIRTIGHT. ALL PENETRATIONS FOR PIPES, CONDUIT AND OTHER SERVICES SHALL BE SEALED AIRTIGHT. PLENUMS SHALL BE TESTED FOR LEAKAGE PER THE COMMISSIONING SPECIFICATIONS. PLENUMS THAT DO NOT MEET THE LEAKAGE CRITERIA PER THE SPECIFICATIONS SHALL BE RESEALED AND RETESTED UNTIL THEY PASS. REFER TO THE ARCHITECTURAL DRAWINGS FOR CONSTRUCTION DETAILS AND ADDITIONAL INFORMATION.
4. FOR ADDITIONAL INFORMATION ON LOW VOLTAGE SYSTEMS (IT & AV) SEE LOW VOLTAGE CONSULTANT DRAWINGS.
5. ALL OTHER EQUIPMENT TO BE IN A NEMA SR WEATHERPROOF ENCLOSURE.

SHEET NOTES

1. J-BOX FOR CONNECTION TO AUTOMATIC BOOK SORTING MACHINE. VERIFY FINAL CONNECTIONS AND WIRING REQUIREMENTS WITH MANUFACTURER.
2. J-BOX FOR CONNECTION TO FACP. VERIFY EXACT LOCATION WITH IT DRAWINGS.
3. J-BOX FOR CONNECTION TO SECURITY PANEL. VERIFY EXACT LOCATION WITH IT DRAWINGS.
4. 2"C.O. TO STUB UP TO CEILING SPACE ABOVE IDF ROOM. PROVIDE CEILING MOUNTED OUTLET IN CEILING SPACE NEAR CONDUIT STUB UP.
5. POWER DISTRIBUTION UNIT TO BE TATE ZONE DISTRIBUTION BOX OR EQUAL WITH JUMPER CONNECTIONS TO ALL POWER FLOOR BOXES. INSTALL PER MANUFACTURER'S INSTALLATION INSTRUCTIONS.
6. FLOOR BOX TO BE TATE COMPATIBLE WITH JUMPER CONNECTIONS. OUTLET TYPE AS SHOWN PER SYMBOL LEGEND ON SHEET E0.1. FLOOR BOX FINISH TO MATCH THE ADJACENT FLOOR FINISH. SEE ARCHITECTURAL FINISHES DRAWINGS FOR MORE DETAILS.
7. J-BOX FOR CONNECTION TO INTEGRAL SHELVING LIGHTING. SEE ARCHITECTURAL FOR MORE DETAILS.
8. J-BOX CONNECTION TO CATV PANEL. VERIFY EXACT LOCATION WITH IT DRAWINGS.
9. J-BOX FOR CONNECTION TO TELCO PANEL. VERIFY EXACT LOCATION WITH IT DRAWINGS.
10. J-BOX FOR CONNECTION TO BET PANEL. VERIFY EXACT LOCATION WITH IT DRAWINGS.
11. CONTRACTOR TO COORDINATE OUTLET MOUNTING & FEEDS WITH ARCHITECTURAL DETAIL.
12. J-BOX CONNECTION TO LIGHTED SHELVES. PROVIDE FINAL CONNECTIONS PER MANUFACTURER;S INSTALLATION INSTRUCTIONS.
13. CEILING MOUNTED J-BOX TO BE CONNECTED TO WIRELESS ACCESS POINTS. VERIFY EXACT LOCATION WITH OWNER AND IT DRAWINGS.
14. RECEPTACLES TO BE RECESSED IN THE CONCRETE COUNTER. SEE ARCHITECTURAL DETAILS FOR MORE INFORMATION.
15. JUNCTION BOX FOR MOTORIZED OVERHEAD COILING DOOR. PROVIDE FINAL CONNECTIONS PER MANUFACTURER'S INSTALLATION INSTRUCTIONS.

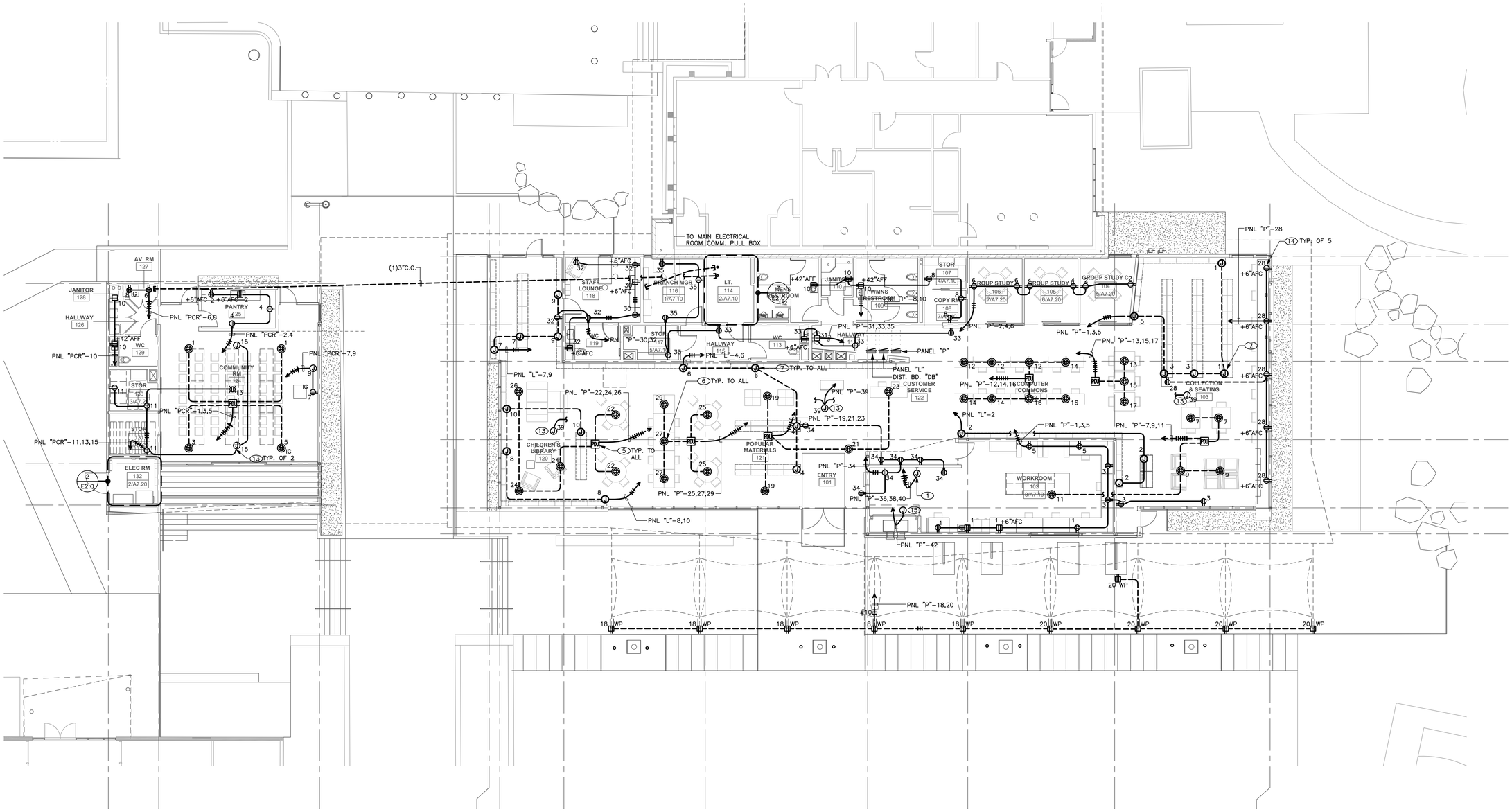

1 POWER PLAN

SCALE: 1/8"=1'-0"

0 4' 8' 16'

PICO BRANCH LIBRARY

2201 Pico Blvd.
Santa Monica, CA 90404

PROJECT

KoningEizenbergArchitecture
1454 25th St, Santa Monica, CA 90404

310.828.6131 info@kearch.com
310.828.0719 fax www.kearch.com

ARCHITECT'S PROJECT NO.
1001

ARCHITECT

All designs, ideas, arrangements and plans indicated by these drawings are the property and copyright of the Architect and shall neither be used on any other work nor be disclosed to any other person for any use whatsoever without written permission.

Koning Eizenberg Architecture and/or its principals and employees waives any and all liability or responsibility for problems that may occur when these plans, drawings, specifications, and/or designs are followed without the professional's guidance with ambiguities, or conflicts which are alleged.

REGISTERED PROFESSIONAL ENGINEER JACOB CHAN No. E13358 Exp. 09-30-12 ELECTRICAL STATE OF CALIFORNIA

GLUMAC
617 W. 7th Street, Suite 500
Los Angeles, CA 90017
T. 213.239.8866 F. 213.239.8816
www.glumac.com
Job No.:
Contact:

engineers for a sustainable future

CONSULTANT

City of Santa Monica Architecture Services
1437 4TH STREET, SUITE 300
SANTA MONICA, CA 90401
TEL. (310) 458-2205
FAX. (310) 399-1541
architecture@smgov.net

SUBMITTED BY: DATE: 20

APPROVED BY: Miriam Mulder, Architecture Services Manager DATE: 20

CITY OF SANTA MONICA
DEPARTMENT OF PUBLIC WORKS

REVIEWED BY: DATE: 20

REVIEWED BY: DATE: 20

REVIEWED BY: DATE: 20

CITY CLIENT

NO.	DATE	BY	DESCRIPTION

REVISIONS

ISSUE
65% CONSTRUCTION DOCUMENTS / BID SET

DATE
01/23/2012

DRAWING NO. **6693**

SHEET OF SHEETS

SHEET TITLE
POWER PLAN

SHEET NO.
E2.0

SHEET OF

DWG NO. -

TITLE OF PROJECT

GENERAL NOTES

1. ELECTRICAL CONTRACTOR TO PROVIDE 120V CONNECTION TO ACTUATORS. LOW VOLTAGE TRANSFORMER TO BE PROVIDED BY DIV 23 CONTROLS.
2. COORDINATE WITH MECHANICAL EXACT LOCATION OF EQUIPMENT. PRE–INSTALLATION POWER & TERMINATION REQUIREMENTS.
3. THE DESIGN OF THE UNDERFLOOR AIR DISTRIBUTION SYSTEM IS BASED ON A SEALED, AIRTIGHT UNDERFLOOR PLENUM. ALL CONSTRUCTION JOINTS AT PLENUM BOUNDARIES AND PLENUM DIVIDING PARTITIONS SHALL BE SEALED AIRTIGHT. ALL PENETRATIONS FOR PIPES, CONDUIT AND OTHER SERVICES SHALL BE SEALED AIRTIGHT. PLENUMS SHALL BE TESTED FOR LEAKAGE PER THE COMMISSIONING SPECIFICATIONS. PLENUMS THAT DO NOT MEET THE LEAKAGE CRITERIA PER THE SPECIFICATIONS SHALL BE RESEALED AND RETESTED UNTIL THEY PASS. REFER TO THE ARCHITECTURAL DRAWINGS FOR CONSTRUCTION DETAILS AND ADDITIONAL INFORMATION.
4. FOR ADDITIONAL INFORMATION ON LOW VOLTAGE SYSTEMS (IT & AV) SEE LOW VOLTAGE CONSULTANT DRAWINGS.
5. ALL OUTDOOR EQUIPMENT TO BE IN A NEMA 3R WEATHERPROOF ENCLOSURE.

SHEET NOTES

(1) CONTRACTOR TO PROVIDE (1)4"C.O. TO STUB INTO ELECTRICAL ROOM FOR PV CONNECTIONS. CONFIRM CONDUIT REQUIREMENTS WITH PV VENDOR.

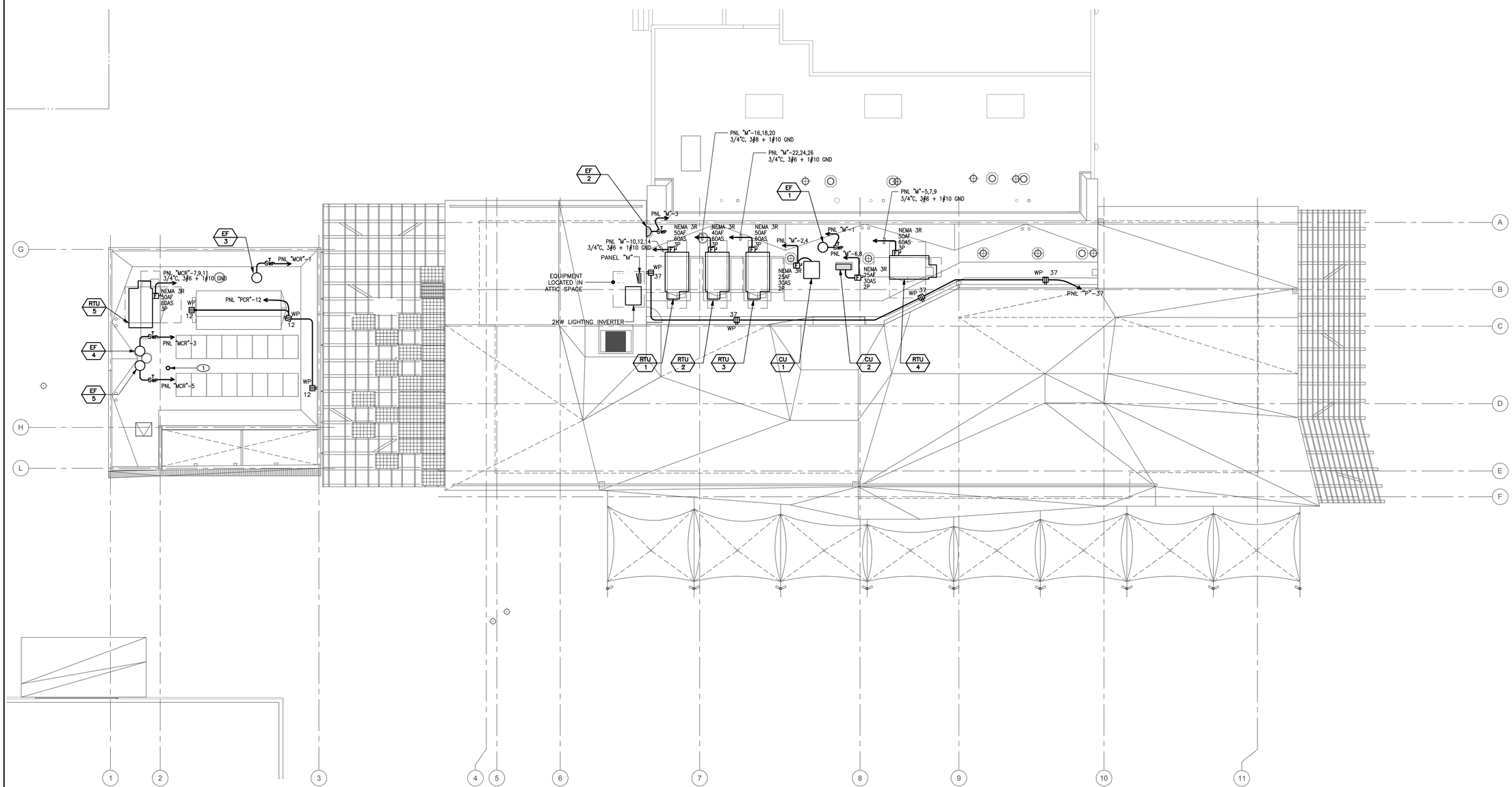

1 **POWER ROOF PLAN**
SCALE: 1/8"=1'–0"

0 4' 8' 16'

PICO BRANCH LIBRARY

2201 Pico Blvd.
Santa Monica, CA 90404

PROJECT

KoningEizenbergArchitecture
1454 25th St, Santa Monica, CA 90404

310.828.6131 info@kearch.com
310.828.0719 fax www.kearch.com

ARCHITECT'S PROJECT NO.
1001

ARCHITECT

All designs, ideas, arrangements and plans indicated by these drawings are the property and copyright of the Architect and shall neither be used on any other work nor be disclosed to any other person for any use whatsoever without written permission.

Koning Eizenberg Architecture and/or its principals and employees waives any and all liability or responsibility for problems that may occur when these plans, drawings, specifications, and/or designs are followed without the professional's guidance with ambiguities, or conflicts which are alleged.

REGISTERED PROFESSIONAL ENGINEER
JACOB CHAN
No. E13358
Exp. 09–30–12
ELECTRICAL
STATE OF CALIFORNIA

GLUMAC
617 W. 7th Street, Suite 500
Los Angeles, CA 90017
T. 213.239.8866 F. 213.239.8816
www.glumac.com
Job No.:
Contact:

engineers for a sustainable future™

CONSULTANT

City of Santa Monica
Architecture Services

1437 4TH STREET, SUITE 300
SANTA MONICA, CA 90401
TEL. (310) 458-2205
FAX. (310) 399-1541
architecture@smgov.net

DATE : _____ 20 __
SUBMITTED BY :

DATE : _____ 20 __
APPROVED BY :
Miriam Mulder,
Architecture Services Manager

CITY OF SANTA MONICA
DEPARTMENT OF PUBLIC WORKS

REVIEWED BY : DATE : _____ 20 __

REVIEWED BY : DATE : _____ 20 __

REVIEWED BY : DATE : _____ 20 __

CITY CLIENT

NO.	DATE	BY	DESCRIPTION

REVISIONS

ISSUE
65% CONSTRUCTION DOCUMENTS / BID SET

DATE
01/23/2012

DRAWING NO. **6693**

SHEET OF SHEETS

SHEET TITLE
POWER ROOF PLAN

SHEET NO.
E2.1

SHEET OF

DWG NO. -

TITLE OF PROJECT:

GENERAL NOTES

1. ELECTRICAL CONTRACTOR TO PROVIDE 120V CONNECTION TO ACTUATORS. LOW VOLTAGE TRANSFORMER TO BE PROVIDED BY DIV 23 CONTROLS.
2. COORDINATE WITH MECHANICAL EXACT LOCATION OF EQUIPMENT. PRE-INSTALLATION POWER & TERMINATION REQUIREMENTS.
3. THE DESIGN OF THE UNDERFLOOR AIR DISTRIBUTION SYSTEM IS BASED ON A SEALED, AIRTIGHT UNDERFLOOR PLENUM. ALL CONSTRUCTION JOINTS AT PLENUM BOUNDARIES AND PLENUM DIVIDING PARTITIONS SHALL BE SEALED AIRTIGHT. ALL PENETRATIONS FOR PIPES, CONDUIT AND OTHER SERVICES SHALL BE SEALED AIRTIGHT. PLENUMS SHALL BE TESTED FOR LEAKAGE PER THE COMMISSIONING SPECIFICATIONS. PLENUMS THAT DO NOT MEET THE LEAKAGE CRITERIA PER THE SPECIFICATIONS SHALL BE RESEALED AND RETESTED UNTIL THEY PASS. REFER TO THE ARCHITECTURAL DRAWINGS FOR CONSTRUCTION DETAILS AND ADDITIONAL INFORMATION.
4. FOR ADDITIONAL INFORMATION ON LOW VOLTAGE SYSTEMS (IT & AV) SEE LOW VOLTAGE CONSULTANT DRAWINGS.

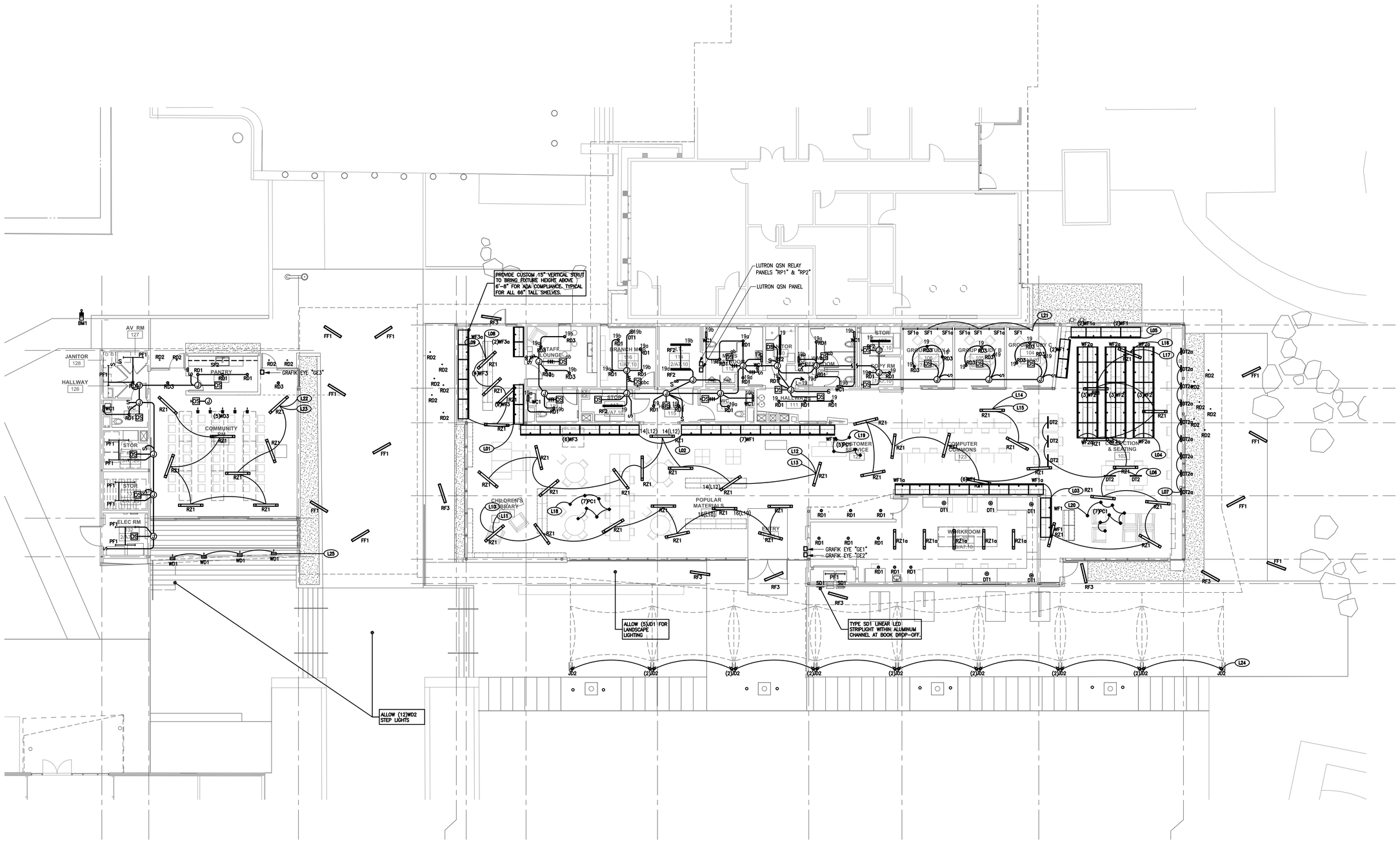

1 **LIGHTING CONTROL PLAN**
SCALE: 1/8"=1'-0"

0 4' 8' 16'

PICO BRANCH LIBRARY

2201 Pico Blvd.
Santa Monica, CA 90404

PROJECT

KoningEizenbergArchitecture
1454 25th St, Santa Monica, CA 90404

310.828.6131 info@kearch.com
310.828.0719 fax www.kearch.com

ARCHITECT'S PROJECT NO.
1001

ARCHITECT

All designs, ideas, arrangements and plans indicated by these drawings are the property and copyright of the Architect and shall neither be used on any other work nor be disclosed to any other person for any use whatsoever without written permission.

Koning Eizenberg Architecture and/or its principals and employees waives any and all liability or responsibility for problems that may occur when these plans, drawings, specifications, and/or designs are followed without the professional's guidance with ambiguities, or conflicts which are alleged.

REGISTERED PROFESSIONAL ENGINEER
JACOB CHAN
No. E13358
Exp. 09-30-12
ELECTRICAL
STATE OF CALIFORNIA

GLUMAC
617 W. 7th Street, Suite 500
Los Angeles, CA 90017
T. 213.239.8866 F. 213.239.8816
www.glumac.com
Job No.:
Contact:
engineers for a sustainable future™

CONSULTANT

City of Santa Monica
Architecture Services
1437 4TH STREET, SUITE 300
SANTA MONICA, CA 90401
TEL. (310) 458-2205
FAX. (310) 399-1541
architecture@smgov.net

SUBMITTED BY : DATE : 20

APPROVED BY : Miriam Mulder, Architecture Services Manager DATE : 20

CITY OF SANTA MONICA
DEPARTMENT OF PUBLIC WORKS

REVIEWED BY : DATE : 20

REVIEWED BY : DATE : 20

REVIEWED BY : DATE : 20

CITY CLIENT

NO.	DATE	BY	DESCRIPTION

REVISIONS

ISSUE
65% CONSTRUCTION DOCUMENTS / BID SET

DATE
01/23/2012

DRAWING NO. **6693**

SHEET OF SHEETS

SHEET TITLE
LIGHTING CONTROL PLAN

SHEET NO.
E3.0

SHEET OF

DWG NO. -

TITLE OF PROJECT

SHEET OF

DWG NO. -

DATE:	15-Dec-11	PANEL VOLTAGE:	208/120V
LOCATION:		PHASE & WIRE:	3PH, 4W
PANEL:	LCR	COPPER BUS:	100A
AIC RATING:	10,000	MAINS CB:	100A

CIRCUIT CODE: 1=(CONTINUOUS) 2=(NON-CONTINUOUS) 3=(RECEPTACLE S) 4=(KITCHEN) NO. OF EQUIP=

CKT NO.	CB CODE	CB TRIP	CB POLE	LOAD DESIGNATION DESCRIPTION	MISC	REC	LITE	LOAD VA	PHASES A	PHASES B	PHASES C	LOAD VA	LITE	REC	MISC	LOAD DESIGNATION DESCRIPTION	CB POLE	CB TRIP	CB CODE	CKT NO.
1									0											2
3										0										4
5											0									6
7									0											8
9										0										10
11											0									12
13																				14
15																				16
17											0									18
19									0											20
21										0										22
23											0									24
25									0											26
27										0										28
29											0									30
31									0											32
33										0										34
35											0									36
37									0											38
39										0										40
41											0									42
								TOTAL	0	0	0									

CONNECTED KVA	0.0
CONN.KVA (CODE 1)	0.0
CONN.KVA (CODE 2)	0.0
CONN.KVA (CODE 3)	0.0
CONN.KVA (CODE 4)	0.0
TENANT ALLOWANCE KVA	0.0
SPARE (DECIMAL)	SPARE KVA 0.0
FEEDER DEMAND KVA	0.0
FEEDER DEMAND AMPS	0.0
XFMR. KVA	0.0

DATE:	20-Jan-12	PANEL VOLTAGE:	480/277V
LOCATION:		PHASE & WIRE:	3PH, 4W
PANEL:	MCR	COPPER BUS:	125A
AIC RATING:	10000	MAINS CB:	125A

CIRCUIT CODE: 1=(CONTINUOUS) 2=(NON-CONTINUOUS) 3=(RECEPTACLES) 4=(KITCHEN) NO. OF EQUIP=

CKT NO.	CB CODE	CB TRIP	CB POLE	LOAD DESIGNATION DESCRIPTION	MISC	REC	LITE	LOAD VA	PHASES A	PHASES B	PHASES C	LOAD VA	LITE	REC	MISC	LOAD DESIGNATION DESCRIPTION	CB POLE	CB TRIP	CB CODE	CKT NO.
1	2	20	1	EF-3	1			696	696								1	20		2
3	2	20	1	EF-4	1			696		696							1	20		4
5	2	20	1	EF-5	1			696			696						1	20		6
7	1	50	3	RTU-5	1			2565	2565								1	20		8
9	1	-	-	-	1			2565		2565							1	20		10
11	1	-	-	-	1			2565			2565						1	20		12
13		20	1						0								1	20		14
15		20	1							0							1	20		16
17		20	1								0						1	20		18
19		20	1						0								1	20		20
21		20	1							0							1	20		22
23		20	1								0						1	20		24
25		20	1						0								1	20		26
27		20	1							0							1	20		28
29		20	1								0						1	20		30
31		20	1						0								1	20		32
33		20	1							0							1	20		34
35		20	1								0						1	20		36
37		20	1						0								1	20		38
39		20	1							0							1	20		40
41		20	1								0						1	20		42
								TOTAL	3261	3261	3261									

CONNECTED KVA	9.8
CONN.KVA (CODE 1)	7.7
CONN.KVA (CODE 2)	2.1
CONN.KVA (CODE 3)	0.0
CONN.KVA (CODE 4)	0.0
TENANT ALLOWANCE KVA	0.0
SPARE (DECIMAL)	SPARE KVA 0.0
FEEDER DEMAND KVA	11.7
FEEDER DEMAND AMPS	14.1

DATE:	20-Jan-12	PANEL VOLTAGE:	208/120V
LOCATION:		PHASE & WIRE:	3PH, 4W
PANEL:	PCR	COPPER BUS:	225A
AIC RATING:	10000	MAINS CB:	200A

CIRCUIT CODE: 1=(CONTINUOUS) 2=(NON-CONTINUOUS) 3=(RECEPTACLES) 4=(KITCHEN) NO. OF EQUIP=

CKT NO.	CB CODE	CB TRIP	CB POLE	LOAD DESIGNATION DESCRIPTION	MISC	REC	LITE	LOAD VA	PHASES A	PHASES B	PHASES C	LOAD VA	LITE	REC	MISC	LOAD DESIGNATION DESCRIPTION	CB POLE	CB TRIP	CB CODE	CKT NO.
1	3	20	1	COMM RM 124 FLOOR OUTLETS				720	1080			360				PANTRY RM 125 RECEPTS	1	20	3	2
3	3	20	1	COMM RM 124 FLOOR OUTLETS				360		720		360				PANTRY RM 125 RECEPTS	1	20	3	4
5	3	20	1	COMM RM 124 FLOOR OUTLETS				360			720	360				HALLWAY RM 126 RECEPTS	1	20	3	6
7	3	20	1	COMM RM 124 RECEPTS				360	720			360				HALLWAY RM 126 RECEPTS	1	20	3	8
9	3	20	1	COMM RM 124 PROJ. SCREEN				360		720		360				RM 128, 129 RECEPTS	1	20	3	10
11	3	20	1	STOR. RM 130,131 RECEPTS				360			1080	720				ROOF RECEPTS	1	20	3	12
13	3	20	1	STOR. RM 130 QUAD RECEPT				360	360											14
15	2	20	1	COMM RM 124 WAP				400		400										16
17											0									18
19									0											20
21										0										22
23											0									24
25									0											26
27										0										28
29											0									30
31									0											32
33										0										34
35											0									36
37									0											38
39										0										40
41											0									42
								TOTAL	2160	1840	1800									

CONNECTED KVA	6.5
CONN.KVA (CODE 1)	0.0
CONN.KVA (CODE 2)	0.4
CONN.KVA (CODE 3)	5.4
CONN.KVA (CODE 4)	0.0
TENANT ALLOWANCE KVA	0.0
SPARE (DECIMAL)	SPARE KVA 0.0
FEEDER DEMAND KVA	5.8
FEEDER DEMAND AMPS	16.1
XFMR. KVA	5.8

DATE:	20-Jan-12	PANEL VOLTAGE:	208/120V
LOCATION:		PHASE & WIRE:	3PH, 4W
PANEL:	L	COPPER BUS:	100A
AIC RATING:	10000	MAINS CB:	100A

CIRCUIT CODE: 1=(CONTINUOUS) 2=(NON-CONTINUOUS) 3=(RECEPTACLES) 4=(KITCHEN) NO. OF EQUIP=

CKT NO.	CB CODE	CB TRIP	CB POLE	LOAD DESIGNATION DESCRIPTION	MISC	REC	LITE	LOAD VA	PHASES A	PHASES B	PHASES C	LOAD VA	LITE	REC	MISC	LOAD DESIGNATION DESCRIPTION	CB POLE	CB TRIP	CB CODE	CKT NO.
1	1	20	1	RM 103 SHELVE LIGHTING				720	1620			900				RM 103, 123 SHELVE LIGHTING	1	20	1	2
3	1	20	1	RM 103 SHELVE LIGHTING				720		1440		720				RM 121 SHELVE LIGHTING	1	20	1	4
5	1	20	1	RM 103 SHELVE LIGHTING				360			1080	720				RM 121 SHELVE LIGHTING	1	20	1	6
7	1	20	1	RM 120 SHELVE LIGHTING				720	1440			720				RM 120 SHELVE LIGHTING	1	20	1	8
9	1	20	1	RM 120 SHELVE LIGHTING				720		1440		720				RM 120 SHELVE LIGHTING	1	20	1	10
11											0									12
13									0											14
15										0										16
17											0									18
19									0											20
21										0										22
23											0									24
25									0											26
27										0										28
29											0									30
31									0											32
33										0										34
35											0									36
37									0											38
39										0										40
41											0									42
								TOTAL	3060	2880	1080									

CONNECTED KVA	9.2
CONN.KVA (CODE 1)	7.0
CONN.KVA (CODE 2)	0.0
CONN.KVA (CODE 3)	0.0
CONN.KVA (CODE 4)	0.0
TENANT ALLOWANCE KVA	0.0
SPARE (DECIMAL)	SPARE KVA 0.0
FEEDER DEMAND KVA	8.8
FEEDER DEMAND AMPS	24.4
XFMR. KVA	7.0

DATE:	20-Jan-12	PANEL VOLTAGE:	208/120V
LOCATION:		PHASE & WIRE:	3PH, 4W
PANEL:	M	COPPER BUS:	225A
AIC RATING:	10000	MAINS CB:	200A

CIRCUIT CODE: 1=(CONTINUOUS) 2=(NON-CONTINUOUS) 3=(RECEPTACLES) 4=(KITCHEN) NO. OF EQUIP=

CKT NO.	CB CODE	CB TRIP	CB POLE	LOAD DESIGNATION DESCRIPTION	MISC	REC	LITE	LOAD VA	PHASES A	PHASES B	PHASES C	LOAD VA	LITE	REC	MISC	LOAD DESIGNATION DESCRIPTION	CB POLE	CB TRIP	CB CODE	CKT NO.
1	2	20	1	EF-1	1			528	5416			4888			1	CU-1	2	30	2	2
3	2	20	1	EF-2	1			528		2972		2444			1	-	-	-	2	4
5	2	50	3	RTU-4	1			2565			5061	2496			1	CU-2	2	40	2	6
7	2	-	-	-	1			2565	5061			2496			1	-	-	-	2	8
9	2	-	-	-	1			2565		5477		2912			1	RTU-1	3	50	1	10
11		20	1								2912	2912			1	-	-	-	1	12
13		20	1						2912			2912			1	-	-	-	1	14
15		20	1							2080		2080			1	RTU-2	3	40	2	16
17		20	1								2080	2080			1	-	-	-	2	18
19		20	1						2080			2080			1	-	-	-	2	20
21		20	1							0		2565			1	RTU-3	3	50	2	22
23		20	1								2565	2565			1	-	-	-	2	24
25		20	1						2565			2565			1	-	-	-	2	26
27		20	1							0							1	20		28
29		20	1								0						1	20		30
31		20	1						0								1	20		32
33		20	1							0							1	20		34
35		20	1								0						1	20		36
37		20	1						0								1	20		38
39		20	1							0							1	20		40
41											0									42
								TOTAL	18034	10529	12618									

CONNECTED KVA	54.1
CONN.KVA (CODE 1)	8.7
CONN.KVA (CODE 2)	35.0
CONN.KVA (CODE 3)	0.0
CONN.KVA (CODE 4)	0.0
TENANT ALLOWANCE KVA	0.0
SPARE (DECIMAL)	SPARE KVA 0.0
FEEDER DEMAND KVA	45.9
FEEDER DEMAND AMPS	127.5
XFMR. KVA	43.7

DATE:	20-Jan-12	PANEL VOLTAGE:	208/120V
LOCATION:		PHASE & WIRE:	3PH, 4W
PANEL:	P	COPPER BUS:	225A
AIC RATING:	10000	MAINS CB:	200A

CIRCUIT CODE: 1=(CONTINUOUS) 2=(NON-CONTINUOUS) 3=(RECEPTACLES) 4=(KITCHEN) NO. OF EQUIP=

CKT NO.	CB CODE	CB TRIP	CB POLE	LOAD DESIGNATION DESCRIPTION	MISC	REC	LITE	LOAD VA	PHASES A	PHASES B	PHASES C	LOAD VA	LITE	REC	MISC	LOAD DESIGNATION DESCRIPTION	CB POLE	CB TRIP	CB CODE	CKT NO.
1	3	20	1	WORKROOM 102 RECEPTS				720	1080			360				GROUP STUDY RM 104 RECEPT	1	20	3	2
3	3	20	1	WORKROOM 102 RECEPTS				360		720		360				GROUP STUDY RM 105 RECEPT	1	20	3	4
5	3	20	1	WORKROOM 102 RECEPTS				720			1080	360				GROUP STUDY RM 106 RECEPT	1	20	3	6
7	3	20	1	RM 103 FLOOR OUTLETS				720	1440			720				RM 108 RECEPTS	1	20	3	8
9	3	20	1	RM 103 FLOOR OUTLETS				720		1260		540				RM 109, 110, 112 RECEPTS	1	20	3	10
11	3	20	1	RM 102 FLOOR OUTLETS				360			1080	720				RM 123 FLOOR OUTLETS	1	20	3	12
13	3	20	1	RM 103 FLOOR OUTLETS				360	1080			720				RM 123 FLOOR OUTLETS	1	20	3	14
15	3	20	1	RM 103 FLOOR OUTLETS				360		1080		720				RM 123 FLOOR OUTLETS	1	20	3	16
17	3	20	1	RM 103 FLOOR OUTLETS				360			1260	900				OUTDOOR RECEPTS	1	20	3	18
19	3	20	1	RM 121 FLOOR OUTLETS				720	1620			900				OUTDOOR RECEPTS	1	20	3	20
21	3	20	1	RM 121 FLOOR OUTLETS				360		0		720				RM 120 FLOOR OUTLETS	1	20	3	22
23	3	20	1	RM 122 FLOOR OUTLETS				360			1080	720				RM 120 FLOOR OUTLETS	1	20	3	24
25	3	20	1	RM 121 FLOOR OUTLETS				720	1080			360				RM 120 FLOOR OUTLETS	1	20	3	26
27	3	20	1	RM 121 FLOOR OUTLETS				720		1620		900				RM 103 RECEPTS	1	20	3	28
29	3	20	1	RM 121 FLOOR OUTLETS				360			2280	1920				LOUNGE RM 118 RECEPTS	1	20	3	30
31	2	20	1	HALLWAY 111 EWC				360	1260			900				RM 116, 118, 119 RECEPTS	1	20	3	32
33	3	20	1	RM 115,117 RECEPTS				720		1980		1260				WORK RM 102 RECEPTS	1	20	3	34
35	3	20	1	RM 116 RECEPTS				720			4318	3598				AUTOMATIC SORTING MACHINE	3	40	2	36
37	3	20	1	ROOF RECEPTS				720	4318			3598				-	-	-	2	38
39	2	20	1	WIRELESS ACCESS POINTS				600		4198		3598				-	-	-	2	40
41				SPACE							600	600				MOTORIZED COILING DOOR	1	20	2	42
								TOTAL	11878	10858	11698									

CONNECTED KVA	35.7
CONN.KVA (CODE 1)	0.0
CONN.KVA (CODE 2)	12.4
CONN.KVA (CODE 3)	23.2
CONN.KVA (CODE 4)	0.0
TENANT ALLOWANCE KVA	0.0
SPARE (DECIMAL)	SPARE KVA 0.0
FEEDER DEMAND KVA	28.9
FEEDER DEMAND AMPS	80.3
XFMR. KVA	28.9

DATE:	20-Jan-12	PANEL VOLTAGE:	208/120V
LOCATION:		PHASE & WIRE:	3PH, 4W
PANEL:	IT	COPPER BUS:	100
AIC RATING:	10000	MAINS CB:	60

CIRCUIT CODE: 1=(CONTINUOUS) 2=(NON-CONTINUOUS) 3=(RECEPTACLES) 4=(KITCHEN) NO. OF EQUIP=

CKT NO.	CB CODE	CB TRIP	CB POLE	LOAD DESIGNATION DESCRIPTION	MISC	REC	LITE	LOAD VA	PHASES A	PHASES B	PHASES C	LOAD VA	LITE	REC	MISC	LOAD DESIGNATION DESCRIPTION	CB POLE	CB TRIP	CB CODE	CKT NO.
1	3	30	2	I.T. RM 114 RACK OUTLETS		1	1800		1800			1800		1		I.T. RM 114 RACK OUTLETS	2	20	3	2
3	3	-	-	I.T. RM 114 RACK OUTLETS		-	1800			1800		1800		-		I.T. RM 114 RACK OUTLETS	-	-	3	4
5	3	30	2	I.T. RM 114 RACK OUTLETS		1	1800				1800	1800		1		I.T. RM 114 RACK OUTLETS	2	20	3	6
7	3	-	-	I.T. RM 114 RACK OUTLETS		-	1800		1800			1800		-		I.T. RM 114 RACK OUTLETS	-	-	3	8
9	2	20	1	I.T. RM 114 CATV	1					800		800			1	I.T. RM 114 "FACP	1	20	2	10
11	2	20	1	I.T. RM 114 TELCO	1						800	800			1	I.T. RM 114 SECURITY	1	20	2	12
13	2	20	1	I.T. RM 114 BET	1			720				720		4		IT ROOM GEN USE RECEPT	1	20	3	14
15		20	1	SPARE					0							SPARE	1	20		16
17		20	1	SPARE						0						SPARE	1	20		18
19		20	1	SPARE				0								SPARE	1	20		20
21		20	1	SPARE					0							SPARE	1	20		22
23		20	1	SPARE						0						SPARE	1	20		24
25		20	1	SPARE				0								SPARE	1	20		26
27		20	1	SPARE					0							SPARE	1	20		28
29		20	1	SPACE						0						SPACE	1	20		30
31		20	1	SPACE				0								SPACE	1	20		32
33		20	1	SPACE					0							SPACE	1	20		34
35		20	1	SPACE						0						SPACE	1	20		36
37		20	1	SPACE				0								SPACE	1	20		38
39		20	1	SPACE					0							SPACE	1	20		40
41		20	1	SPACE							0					SPACE	1	20		42
								TOTAL	4320	2600	2600									

CONNECTED KVA	13.0
CONN.KVA (CODE 1)	0.0
CONN.KVA (CODE 2)	1.6
CONN.KVA (CODE 3)	7.9
CONN.KVA (CODE 4)	0.0
TENANT ALLOWANCE KVA	0.0
SPARE (DECIMAL)	SPARE KVA 0.0
FEEDER DEMAND KVA	9.5
FEEDER DEMAND AMPS	26.4
XFMR. KVA	9.5

* = CONTRACTOR TO PROVIDE LOCK-ON DEVICE.

LEGEND

LCR	MCR	PCR
L	M	P
		IT

TITLE OF PROJECT:

PICO BRANCH LIBRARY

2201 Pico Blvd.
Santa Monica, CA 90404

PROJECT

KoningEizenberg Architecture
1454 25th St, Santa Monica, CA 90404
310.828.6131 info@kearch.com
310.828.0719 fax www.kearch.com

ARCHITECT'S PROJECT NO.
1001

ARCHITECT

All designs, ideas, arrangements and plans indicated by these drawings are the property and copyright of the Architect and shall neither be used on any other work nor be disclosed to any other person for any use whatsoever without written permission.

Koning Eizenberg Architecture and/or its principals and employees waives any and all liability or responsibility for problems that may occur when these plans, drawings, specifications, and/or designs are followed without the professional's guidance with ambiguities, or conflicts which are alleged.

REGISTERED PROFESSIONAL ENGINEER JACOB CHIN No. E13358 Exp. 09-30-12 ELECTRICAL STATE OF CALIFORNIA

GLUMAC
617 W. 7th Street, Suite 500
Los Angeles, CA 90017
T. 213.239.8866 F. 213.239.8816
www.glumac.com
Job No.:
Contact:
engineers for a sustainable future™

CONSULTANT

City of Santa Monica Architecture Services
1437 4TH STREET, SUITE 300
SANTA MONICA, CA 90401
TEL. (310) 458-2205
FAX. (310) 399-1541
architecture@smgov.net

DATE: _____ 20__
SUBMITTED BY :

DATE: _____ 20__
APPROVED BY :
Miriam Mulder,
Architecture Services Manager

CITY OF SANTA MONICA
DEPARTMENT OF PUBLIC WORKS

REVIEWED BY : DATE : _____ 20__

REVIEWED BY : DATE : _____ 20__

REVIEWED BY : DATE : _____ 20__

CITY CLIENT

NO.	DATE	BY	DESCRIPTION

REVISIONS

ISSUE
65% CONSTRUCTION DOCUMENTS / BID SET

DATE
01/23/2012

DRAWING NO. **6693**

SHEET OF SHEETS

SHEET TITLE
PANELBOARD SCHEDULES

SHEET NO.
E5.1

WIRING LEGEND:

△ \ ▽ QS CONTROL LINK (*SEE BELOW)

▲ \ ▼ QS CONTROL LINK (*SEE BELOW)
(CONNECT WIRES 1, 3 AND 4. DO NOT CONNECT WIRE # 2)

QS WIRING AS REQUIRED BY CONTROL LINK LENGTH:

Control Link Length	Wire Gauge	Available from Lutron in one cable:
Less than 500ft (153m) use △ or ▲	Power (terminals 1&2): 1 pair 18 AWG (1.0mm²)	GRX-CBL-346S or GRX-PCBL-346S
	Data (terminals 3&4): 1 pair 22 AWG (0.5mm²), twisted and shielded*	
500ft (153m) to 2000ft (610m)** use ▽ or ▼	Power (terminals 1&2): 1 pair 12 AWG (1.0mm²)	GRX-CBL-46L or GRX-PCBL-46L
	Data (terminals 3&4): 1 pair 22 AWG (0.5mm²), twisted and shielded*	

*ALTERNATE DATA-ONLY CABLE: USE APPROVED DATA LINK CABLE (22 AWG [0.5MM²] TWISTED/SHIELDED) FROM BELDEN (MODEL # 9461).

**TOTAL LENGTH OF THE QS LINK MUST NOT EXCEED 2000FT (610M).

***QS LINK CAN HAVE A MAXIMUM OF 99 DEVICES, 100 ZONES, AND 512 SWITCH LEGS.

□ NORMAL INPUT POWER

◪ NORAML/EMERGENCY INPUT POWER

● 2 #12AWG

◇ ECOSYSTEM BUS:
LUTRON CABLE C-CBL-216-GR-1 (2 #16 CONDUCTOR NON-PLENUM) OR C-PCBL-216-CL-1 (2 #16 CONDUCTOR PLENUM RATED). OTHERWISE USE 2 #16 AWG BY OTHERS.

⚠ CAT5E OR BETTER CABLE FOR DEDICATED LUTRON NETWORK TERMINATED WITH RJ45 CONNECTORS (TO BE PROVIDED BY OTHERS). 328 FEET (100M) MAXIMUM RUN.

◆ 0-10V SIGNAL 2 #18

WIRING NOTES:

QS CONTROL LINK

THE QS CONTROL LINK HAS A FREE WIRING TOPOLOGY (DAISY CHAIN, T-TAP, ETC.) FOR ILLUSTRATION PURPOSES THE QS CONTROL LINK IS SHOWN WIRED IN THE DAISY CHAIN FASHION. ADDITIONALLY, CONTROLS HAVE BEEN LAID OUT TO ENSURE APPROPRIATE POWER TO EACH DEVICE. CHECK POWER REQUIREMENTS BEFORE MODIFYING DEVICE WIRING ORDER. USE LUTRON CABLE GRX-CBL-346S (4 CONDUCTOR NON-PLENUM) OR GRX-PCBL-346S (4 CONDUCTOR PLENUM). OTHERWISE USE 2 #18 AWG (1.0 MM SQ) AND 1 BELDEN #9461. USE GRX-CBL-46L OR GRX-PCBL-46L (4 CONDUCTOR PLENUM) FOR LINKS RUNNING LONGER THAN 500 FT.

ECOSYSTEM BUS

THE ECOSYSTEM BUS HAS A FREE WIRING TOPOLOGY (DAISY CHAIN, T-TAP, HOME-RUN ETC.) FOR ILLUSTRATION PURPOSES THE ECOSYSTEM BUS IS SHOWN WIRED IN DAISY CHAIN FASHION. ECOSYSTEM BUS REQUIRES LUTRON CABLE C-CBL-216-GR-1 (2 #16 CONDUCTOR NON-PLENUM) OR C-PCBL-216-CL-1 (2 #16 CONDUCTOR PLENUM RATED). OTHERWISE USE 2 #16 AWG BY OTHERS. ECOSYSTEM BUS (E1 AND E2) ARE POLARITY INSENSITIVE.

BUS LENGTH IS LIMITED BY THE WIRE GAUGE USED FOR E1 AND E2 AS FOLLOWS:

WIRE GAUGE	MAX LOOP LENGTH
#18 AWG (1.02MM)	550' (167M)
#16 AWG (1.29MM)	900' (274M)
#14 AWG (1.63MM)	1,400' (426M)
#12 AWG (2.05MM)	2,200' (670M)

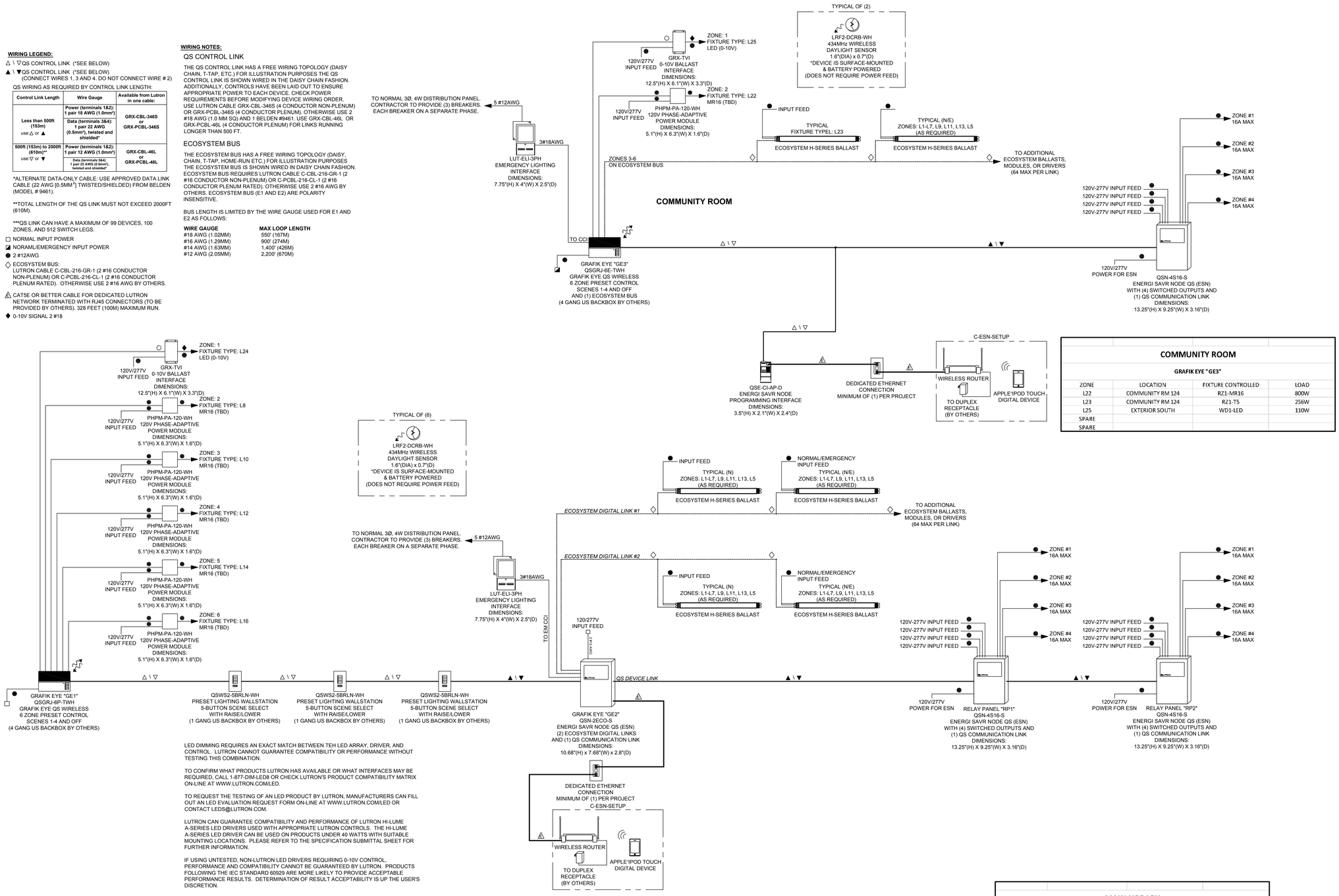

LED DIMMING REQUIRES AN EXACT MATCH BETWEEN TEH LED ARRAY, DRIVER, AND CONTROL. LUTRON CANNOT GUARANTEE COMPATIBILITY OR PERFORMANCE WITHOUT TESTING THIS COMBINATION.

TO CONFIRM WHAT PRODUCTS LUTRON HAS AVAILABLE OR WHAT INTERFACES MAY BE REQUIRED, CALL 1-877-DIM-LED8 OR CHECK LUTRON'S PRODUCT COMPATIBILITY MATRIX ON-LINE AT WWW.LUTRON.COM/LED.

TO REQUEST THE TESTING OF AN LED PRODUCT BY LUTRON, MANUFACTURERS CAN FILL OUT AN LED EVALUATION REQUEST FORM ON-LINE AT WWW.LUTRON.COM/LED OR CONTACT LEDS@LUTRON.COM.

LUTRON CAN GUARANTEE COMPATIBILITY AND PERFORMANCE OF LUTRON HI-LUME A-SERIES LED DRIVERS USED WITH APPROPRIATE LUTRON CONTROLS. THE HI-LUME A-SERIES LED DRIVER CAN BE USED ON PRODUCTS UNDER 40 WATTS WITH SUITABLE MOUNTING LOCATIONS. PLEASE REFER TO THE SPECIFICATION SUBMITTAL SHEET FOR FURTHER INFORMATION.

IF USING UNTESTED, NON-LUTRON LED DRIVERS REQUIRING 0-10V CONTROL, PERFORMANCE AND COMPATIBILITY CANNOT BE GUARANTEED BY LUTRON. PRODUCTS FOLLOWING THE IEC STANDARD 60929 ARE MORE LIKELY TO PROVIDE ACCEPTABLE PERFORMANCE RESULTS. DETERMINATION OF RESULT ACCEPTABILITY IS UP THE USER'S DISCRETION.

IS USING UNTESTED, NON-LUTRON LED DRIVERS REQUIRING PHASE CONTROL, PERFORMANCE AND COMPATIBILITY CANNOT BE GUARANTEED BY LUTRON. A-SERIES OR ELV PRODUCTS PROVIDING HIGH END AND LOW END TRIM ADJUSTMENTS ARE MORE LIKELY TO PROVIDE ACCEPTABLE PERFORMANCE RESULTS. DETERMINATION OF RESULT ACCEPTABILITY IS UP TO THE USER'S DISCRETION.

COMMUNITY ROOM

GRAFIK EYE "GE3"

ZONE	LOCATION	FIXTURE CONTROLLED	LOAD
L22	COMMUNITY RM 124	RZ1-MR16	800W
L23	COMMUNITY RM 124	RZ1-T5	256W
L25	EXTERIOR SOUTH	WD1-LED	110W
SPARE			
SPARE			

LUTRON QSN RELAY PANEL "RP-1"

RELAY	LOCATION	FIXTURE CONTROLLED	LOAD
1	WORK ROOM 102	RZ1A-MR16	500W
2	WORK ROOM 102	RZ1A-T5	150W
3	WORK ROOM 102	RD1-CF2	192W
4	WORK ROOM 102	DT1-CF2	300W

LUTRON QSN RELAY PANEL "RP-2"

RELAY	LOCATION	FIXTURE CONTROLLED	LOAD
1	EXTERIOR SOUTH	RF3-T5	160W
2	EXTERIOR EAST	FF1-T5	112W
3	EXTERIOR WEST	RD2-LED/RF3-T5	200W
4	EXTERIOR WEST CANOPY	FF1-T5	192W

MAIN LIBRARY

GRAFIK EYE "GE1"

ZONE	LOCATION	FIXTURE CONTROLLED	LOAD
L24	EXTERIOR LIGHTING	JD2-LED	2240W
L8	CHILDRENS LIB. 120/	RZ1-MR16	400W
-	POPULAR MATERIALS 121	-	-
L10	CHILDRENS LIB. 120/	RZ1-MR16	800W
-	POPULAR MATERIALS 121	-	-
L12	CHILDRENS LIB. 120/	RZ1-MR16	900W
-	POPULAR MATERIALS 121	-	-
L14	COMPUTER	RZ1-MR16	800W
L16	COLLECTION AND SEATING	RZ1-MR16	900W
-	103	-	

MAIN LIBRARY

GRAFIK EYE "GE2"

ZONE	LOCATION	FIXTURE CONTROLLED	LOAD
L9	CHILDRENS LIB. 120	RZ1-T5	128W
L11	CHILDRENS LIB. 120	RZ1-T5	256W
L13	CHILDRENS LIB. 120/ POPULAR MATERIALS 121	RZ1-T5	288W
L15	COMPUTER COMMONS	RZ1-T5	256W
L17	COLLECTION AND SEATING 103	RZ1-T5	288W
L18	CHILDRENS LIB. 120	PC1-CF2	210W
L19	CUSTOMER SERVICE 122	PC1-CF2	150W
L20	COLLECTION AND SEATING 103	PC1-CF2	210W
L21	GROUP STUDY ROOMS	SF1/SF1a-T5	196W
L1	CHILDRENS LIB. 120	WF3/WF3a-T5	378W
L2	POPULAR MATERIALS 121	WF3/WF1-T5	230W
L3	COMPUTER COMMONS 123	WF1-T5	240W
L4	COLLECTION AND SEATING 103	WF2a-T5	420W
L5	COLLECTION AND SEATING 103	WF1-T5	252W
L6	COMPUTER COMMONS 123	DT2-LED	17W
L7	COLLECTION AND SEATING 103	DT2a-LED	152W

PICO BRANCH LIBRARY

2201 Pico Blvd.
Santa Monica, CA 90404

PROJECT

KoningEizenberg Architecture
1454 25th St, Santa Monica, CA 90404
310.828.6131 info@kearch.com
310.828.0719 fax www.kearch.com

ARCHITECT'S PROJECT NO.
1001

ARCHITECT

All designs, ideas, arrangements and plans indicated by these drawings are the property and copyright of the Architect and shall neither be used on any other work nor be disclosed to any other person for any use whatsoever without written permission.

Koning Eizenberg Architecture and/or its principals and employees waives any and all liability or responsibility for problems that may occur when these plans, drawings, specifications, and/or designs are followed without the professional's guidance with ambiguities, or conflicts which are alleged.

REGISTERED PROFESSIONAL ENGINEER JACOB CHAN No. E13358 Exp. 09-30-12 ELECTRICAL STATE OF CALIFORNIA

GLUMAC
617 W. 7th Street, Suite 500
Los Angeles, CA 90017
T. 213.239.8866 F. 213.239.8816
www.glumac.com
Job No.:
Contact:
engineers for a sustainable future™

CONSULTANT

City of Santa Monica Architecture Services
1437 4TH STREET, SUITE 300
SANTA MONICA, CA 90401
TEL. (310) 458-2205
FAX. (310) 399-1541
architecture@smgov.net

DATE : _____ 20 __
SUBMITTED BY :

DATE : _____ 20 __
APPROVED BY :
Miriam Mulder,
Architecture Services Manager

CITY OF SANTA MONICA
DEPARTMENT OF PUBLIC WORKS

REVIEWED BY : DATE : _____ 20 __

REVIEWED BY : DATE : _____ 20 __

REVIEWED BY : DATE : _____ 20 __

CITY CLIENT

NO.	DATE	BY	DESCRIPTION

REVISIONS

ISSUE
65% CONSTRUCTION DOCUMENTS / BID SET

DATE
01/23/2012

DRAWING NO. **6693**

SHEET OF SHEETS

SHEET TITLE
LIGHTING CONTROL DIAGRAM

SHEET NO.
E5.2

SHEET OF

DWG NO. -

TITLE OF PROJECT

PICO BRANCH LIBRARY

SANTA MONICA, CA

GENERAL NOTES

REFER TO AUDIO VISUAL SPECIFICATION SECTION FOR COMPLETE REQUIREMENTS

1. ELECTRICAL

A. All conduits, junction boxes, back boxes, pull string and power outlets by Division 26 contractor as required.
B. All power to AV equipment to originate from dedicated audio video load center in accordance with the latest local and national codes referencing "technical power systems", NEC Article 640.
C. Branch circuits feeding audio–visual equipment must not originate from load centers connected to inductive loads.
D. Provide all AV circuits with isolated ground, dedicated neutral.

2. COORDINATE

A. Coordinate with the work of all sections. Coordinate the location of blocking and backing required by this section. Make reasonable minor adjustments to preserve architectural symmetry and alignment with adjacent features at no claim for additional cost or time. Present conflicts in timely manner for resolution.
B. Relocation, revision or correction caused by failure of the contractor to coordinate the work shall not be subject to claim for additional cost or time.
C. Power receptacles shown on the AV drawings outside of equipment racks are shown for coordination information only. Refer to Division 26 documents for construction.
D. These drawings show scope. The exact location & elevations of loudspeakers, receptacles and devices must be coordinated with the architectural drawings.
E. Conduit, back boxes and pull boxes supplied and installed by electrical contractor under supervision of AV contractor.
F. General contractor shall coordinate the conduit, devices, pathways and junction boxes for the AV system with other trade to avoid any conflicts.

3. LOCATIONS AND DIMENSIONS

A. Locations and dimensions shown on architectural drawings take precedence over these AV drawings. In case of apparent conflict or ambiguity, submit to the Architect in timely manner for resolution.
B. Dimensions take precedence over scale. Large scale drawings take precedence over small. Report all conflicts before installation.
C. Unless otherwise noted, dimensions are shown height x width x depth.
D. Verify all dimensions, locations and conditions in the field prior to starting work. Notify Architect of any apparent discrepancies.

4. SUPPORT

Provide all blocking, bridging, ties, fasteners and related support provisions for all work of this section. Comply with applicable code requirements for means of support of electrical equipment of the same weight under the same mounting conditions. Do not apply any load to building structure without first obtaining written approval of the project Structural Engineer. Obtain per project procedures. Supports for raceway system by Division 26 contractor.

5. BOX, PANEL AND ENCLOSURE INSTALLATION

A. Coordinate the location of all boxes, panels, enclosures and related raceway with the work of other sections.
B. Verify access to boxes, panels and enclosures comply with applicable code.
C. Coordinate and correct all conditions of occlusion of all loudspeaker assemblies. Where more than one (1) flush mounted ceiling loudspeaker has been scheduled, none shall be located closer to any fixed wall than one–half (1/2) of the adjacent clear height, except at ceiling discontinuities, or where specifically shown on the drawings.
D. Install boxes, panels and enclosures square and plumb. Set flush mounted units so that the face of the cover, Bezel or Escutcheon, is in the same plane as the surrounding finished surface. Mount boxes, panels and trim so that there are no gaps, cracks or obvious lines between the trim and the adjacent finished surface.
E. Unless otherwise need, provide steel boxes, panels and enclosures. Comply with Division 26 requirements and applicable code.
F. Unless otherwise noted, boxes and enclosures shall be not less than 2–1/8 inches deep. Provide the larger of the size required by applicable code or as shown on drawings. Coordinate wire and cable bend radius with box and enclosure size.
G. Pull boxes: Provide as required by the most restrictive of applicable code or the provisions of Division 26. Coordinate with wire and cable bend radius.

6. RACEWAY

A. For all work of this section, raceway above ground shall be EMT, raceway below ground shall be PVC.
B. Raceway shall be ¾ inch diameter trade size unless otherwise noted.
C. All conduit runs over 100 ft. must have large radius bends.
D. A maximum of two 90 degree elbows in each conduit run.
E. Conduit with fiber optic cable installed, must conform to the minimum bend radius as specified by the manufacturer of the cable. Division 26 contractor is to apply radius bends where needed. Fiber bend radius shall be a minimum long–term low–stress radius not less than 20 times the cable diameter.
F. Keep a minimum of 12" clear between electrical conduit and low voltage conduit.

7. GROUNDING AND BONDING

Comply with all applicable codes and ordinances. Refer to National Electrical Code Section 250.

A. Bond raceway and related boxes, panels, enclosures and cabinets as required by applicable code and Division 26.
B. Make raceway connections to equipment racks and similar equipment enclosures containing powered equipment with isolated fittings.
C. Ground and bond equipment racks and similar equipment enclosures containing powered equipment exclusively via the isolated equipment grounding conductors provided under Division 26. Size such conductors according to applicable code. For each technical branch circuit, the isolated equipment grounding conductor shall be copper of the same gauge as supply and neutral conductors. Main isolated equipment grounding conductor to each ensemble of equipment racks shall be copper, sized as required by applicable code.
D. D.C. resistance between the isolated equipment grounding bus at equipment room technical power panels and the main project ground field shall not exceed 0.15 OHMS.
E. For community antenna television and master antenna television systems and related provisions, comply with Article 800, National Electrical Code.

8. CABLE AND WIRE

A. All low voltage cable and wire by Audio–Visual Contractor.
B. Use plenum rated wire where required by code.
C. All wire distribution to equipment rack to be plenum rated.

9. GENERAL

A. In the event that these plans, notes or details or any part or portion thereof are used by any third–party without the express authorized permission of VENEKLASEN ASSOCIATES, the unauthorized user and anyone benefiting therefrom, shall defend, indemnify and hold harmless VENEKLASEN ASSOCIATES and its Agents, Principals, Employees and Consultants from and against any and all claims, including attorneys' fees arising out of said unauthorized use.
B. Furthermore, the unauthorized use of these plans, notes, details or any part or portion therefore is expressly prohibited and VENEKLASEN ASSOCIATES retains a copyright over any and all documents prepared by VENEKLASEN ASSOCIATES.
C. In the event that the installer deviates from the plans and specifications prepared by VENEKLASEN ASSOCIATES which results in damage to persons or property of any kind, Installer hereby agrees to defend, indemnify and hold harmless VENEKLASEN ASSOCIATES, its Agents, Principals, Employees and Consultants from and against any and all claims, including attorneys' fees caused by such failure to follow the plans and specifications prepared by VENEKLASEN ASSOCIATES, excepting only the damages to persons or property which are caused by the sole negligence or willful misconduct of VENEKLASEN ASSOCIATES.
D. Drawings are diagrammatic and are intended to convey Scope of Work and to indicate general arrangement. There are not intended to show every detail including offset or fitting or every structural difficulty that may be encountered during the work. Except as otherwise indicated, locations of items are approximate only. Exact locations necessary to secure proper conditions and results must be determined at project site and must be approved by the Owner's representative.
E. Except as otherwise indicated, make reasonable modifications in layout as needed to prevent conflict with other work or proper execution of work.
F. Include work not usually shown or specified, but necessary for proper installation and operation of a system or piece of equipment in work.

BOX SCHEDULE

NUMBER	DESCRIPTION	BOX TYPE	SIZE	INSTALL METHOD	ELEVATION
ALA	ASSISTIVE LISTENING ANTENNA BOX	5 SQ. BOX W/ SGMR	4-11/16 x 4-1/16 x 2-1/8	ABOVE CEILING	
AV1	AV INPUT PANEL	4 GANG BOX DEEP W/ 4GMR	10-7/16 x 4-1/2 x 2-1/2	WALL	PSRH
AVD1	AUDIO VIDEO DISTRIBUTION BOX	HOFFMAN ASG12X12X6NK	12 x 12 x 6	WALL	48" AFF.
CT1	CONTROL STATION	CRESTRON BB-8X-DSW	10.79 x 13.79 x 3.25	WALL	PSCH
FB1	FLOOR BOX	FSR INC FL-540P W/ COVER	10 x 12 x 6	FLOOR	
LP1	LECTERN PANEL	4 GANG BOX DEEP W/ 4GMR	10-7/16 x 4-1/2 x 2-1/2	IN LECTERN	
PSC	PROJECTION SCREEN CONTROL BOX	5 SQ. BOX W/ SGMR	4-11/16 x 4-1/16 x 2-1/8	ABOVE CEILING	
SC1	CEILING SPEAKER	QSC AD-CI52ST MUDRING OR TILEBRIDGE		CEILING	
SIW1	IN-WALL SPEAKER	BG RADIA SA-500 BACKBOX WALL		WALL	5'-8" AFF.
SIW2	IN-WALL SPEAKER	TANNOY 8000 5140 BACKCAN FOR IW4 DC		WALL	SEE PLANS
SUB	SUBWOOFER JUNCTION BOX	TANNOY 8000 4240 BACKCAN FOR IW62 TS		WALL	2'-0" AFF.
VPJL	VIDEO PROJECTOR LIFT	DRAPER SL6		CEILING	
WMA	WIRELESS MIC ANTENNA BOX	4 GANG BOX DEEP W/ 4GMR	10-7/16 x 4-1/2 x 2-1/2	ABOVE CEILING	

SHEET INDEX

Sheet Index

Sheet Number	Sheet Title	DESIGN DEVELOPMENT 10/25/11	COORDINATION SET 11/28/11	50% CONSTRUCTION DOCUMENTS 12/22/11	65% CONSTRUCTION DOCS / BID SET 01/23/12
AV0.01	GENERAL NOTES BOX SCHEDULE AND SHEET INDEX	X	X	X	X
AV0.02	ABBREVIATIONS NOTES AND SYMBOLS			X	X
AV1.01A	COMMUNITY ROOM EQUIPMENT PLAN	X	X	X	X
AV1.01B	COMMUNITY ROOM INFRASTRUCTURE PLAN			X	X
AV1.02A	LIBRARY EQUIPMENT PLAN	X	X	X	X
AV1.02B	LIBRARY INFRASTRUCTURE PLAN			X	X
AV2.51	SECTIONS AND ELEVATIONS	X	X	X	X
AV3.00	WIRING SCHEME AND SYMBOL KEY			X	X
AV3.01	SCHEMATIC DIAGRAM			X	X
AV4.51	TYPICAL EQUIPMENT ROOM LAYOUT			X	X
AV6.01	AV DETAILS			X	X
AV6.02	AV DETAILS			X	X
AV6.03	AV DETAILS			X	X

SHEET OF

DWG. NO. : -

TITLE OF PROJECT :

PICO BRANCH LIBRARY
2201 Pico Blvd.
Santa Monica, CA 90404

PROJECT

KoningEizenberg Architecture
1454 25th St, Santa Monica, CA 90404
310.828.6131 info@kearch.com
310.828.0719 fax www.kearch.com

ARCHITECT'S PROJECT NO.
1001

ARCHITECT

All designs, ideas, arrangements and plans indicated by these drawings are the property and copyright of the Architect and shall neither be used on any other work nor be disclosed to any other person for any use whatsoever without written permission.

Koning Eizenberg Architecture and/or its principals and employees waives any and all liability or responsibility for problems that may occur when these plans, drawings, specifications, and/or designs are followed without the professional's guidance with ambiguities, or conflicts which are alleged.

Veneklasen Associates
Consultants In Acoustics | AV | IT | Environmental Noise
1711 Sixteenth Street
Santa Monica, CA 90404
(310) 450-1153
www.veneklasen.com

CONSULTANT

City of Santa Monica
Architecture Services
1437 4TH STREET, SUITE 300
SANTA MONICA, CA 90401
TEL. (310) 459-2205
FAX. (310) 399-1541
architecture@smgov.net

DATE : 20
SUBMITTED BY :

DATE : 20
APPROVED BY :
Miriam Mulder,
Architecture Services Manager
CITY OF SANTA MONICA
DEPARTMENT OF PUBLIC WORKS

REVIEWED BY : DATE : 20

REVIEWED BY : DATE : 20

REVIEWED BY : DATE : 20

CITY CLIENT

NO.	DATE	BY	DESCRIPTION

REVISIONS

ISSUE
65% CONSTRUCTION DOCUMENTS / BID SET

DATE
01/23/2012

DRAWING NO. **6693**

SHEET OF SHEETS

SHEET TITLE
GENERAL NOTES
BOX SCHEDULE
AND SHEET INDEX

SHEET NO.
AV0.01

SHEET OF

DWG. NO. - -

TITLE OF PROJECT

DEVICE / BOX ID

1GMR	1 Gang Mud Ring	DAO	Digital to Analog Output	IRT	IR Transmitter	PJL	Projector Lift	SVHS	S-Video Cassette Recorder
2GMR	2 Gang Mud Ring	DAS	Digital Audio Source	ISDN	Integrated Service Digital Network	PJS	Projection Screen	SVMS	S-Video Matrix Switcher
3GMR	3 Gang Mud Ring	DAT	Digital Audio Tape Unit	ITR	Isolation Transformer	PM	Paging Microphone	SVS	S-Video Switcher
4GMR	4 Gang Mud Ring	DC	Document Camera			PMP	Podium Microphone Panel	SVSS	S-Video Separator Switcher
		DCA	Digital Controlled Amplifier	J	Junction Box	PNWS	Power Network Switch	SW	Wall Mounted Speaker
A	Audio	DCC	Data Control Card			POD	Podium	SWH	Sound Web Hub
ABA	Audio Buffer Amplifier	DCM	Digital Cart Machine	KB	Keyboard	PP	Podium Panel	SYSW	System Switcher
AC	Audio Combiner	DCN	Divider Combiner Network	KM	Keyboard & Mouse	PPS	Phantom Power Supply		
ACN	Audio Control Network	DCPU	Digital Central Processing Unit	KMI	Keyboard & Mouse Interface	PRE	Pre Amplifier	TAM	Telephone Access Module
ACR	Audio Control Relay	DD	Dimmer Doubler	KMK	Keyboard & Mouse Kit	PRK	Portable Rack	TB	Terminal Box
ACS	Audio Conferencing System	DDC	Digital Document Camera	KVM	Keyboard, Video & Mouse	PSB	Powered Subwoofer	TBC	Time Base Corrector
ADA	Audio Distribution Amplifier	DDL	Digital Delay	KVME	Keyboard, Video & Mouse Extender	PSC	Projection Screen Control	TCR	Transcoder
ADB	Audio Distribution Box	DEC	Decoder			PSD	Paging Station Desk Mount	TCS	Teleconferencing System
ADP	Adaptor	DEQ	Dynamic Equalizer	LAN	Local Area Network	PSLR	Program Select & Level Remote	TEL	Telephone Output
ADI	Analog to Digital Input	DJCC	Digital Joystick Camera Control	LC	Lighting Console	PSP	Powered Speaker	TI	Telephone Interface
ADK	Audio Ducker	DIM	Dimmer Module	LD	Line Doubler	PSR	Paging Station Rack Mount	TJB	Transformer Junction Box
AE	Audio Extractor	DIU	Digital Interface Unit	LDP	Laser Disc Player	PSW	Paging Station Wall Mount	TM	Table Microphone
AFT	AM/FM Tuner	DM	Digital Mixer	LDR	Line Driver	PTC	Programmable Time Clock	TMB	Table Microphone Box
AIP	Audio Input Panel	DMR	Dimmer Rack	LEC	Lectern	PVM	Preview Video Monitor	TP	Twisted Pair
AIU	Analog Interface Unit	DMX	DMX	LED	Light Emitting Panel	PWS	Power Strip	TPC	Touch Panel Control
AL	Audio Left	DMXC	DMX Control Cable	LFS	Low Frequency Speaker	PXS	Proximity Switch	TPM	Telepromptor
ALA	Assistive Listening Antenna	DMXN	DMX Node	LI	Lighting Interface	PZM	Pressure Zone Microphone	TPR	Twisted Pair Receiver
ALR	Assistive Listening Receiver	DPB	Disc Publisher	LM	Line Module			TPT	Twisted Pair Transmitter
ALT	Assistive Listening Transmitter	DRC	Door Control	LP	Lectern Panel	RAS	RGB Auto Switcher	TS	Touch Screen
AM	Audio Monitor	DREC	Digital Recorder	LPT	Laptop	RC	Remote Control	TT	Turn Table
AMS	Audio Monitor Speaker	DSD	Data Stroage Device	LTF	Line Transformer	RDA	RGB Distribution Amp	TTP	Table Top Panel
AMX	Auto Mixer	DSP	Digital Signal Processor	LTP	LCD Touch Panel	REC	Recorded	TV	Television
ANT	Antenna	DSS	Digital Satellite System	LVR	Line Voltage Regulator	REV	Reverb	TVP	TV Panel
AOB	Analog Output Bridge	DVD	Digital Versatile Device			RF	Radio Frequency	TVT	TV/RF Tuner
AOP	Audio Output Panel	DVHS	Digital Cassette Recorder	M	Microphone	RFA	RF Amplifier		
APB	Audio Patch Bay	DVP	Digital Video Processor	MA	Mixer Amplifier	RFAS	RF Antenna Splitter	UBC	Unbalance to Balance Converter
APD	Antenna Power Distribution	DVR	Digital Video Recorder	MAL	Media Archive Library	RFDA	RF Distribution Amplifier	UC	Up Converter
APM	Audio Program Monitor	DVS	Digital Video Scaler	MATV	Master Antenna Television	RFS	RF Splitter	UP	Usher Panel
AR	Audio Right	DWR	Drawer	MCS	Main Control System	RFT	RF Transmitter	UPS	Uninterruptible Power Supply
ASP	Antenna Splitter			MCT	Main Cabler Tray	RFTA	RF Transmitting Antenna	USB	Univeral Serial Bus
ASV	Audio Server	EBF	Expanded Beam Fiber Connector	MCV	Media Converter	RGB	RGBHV	USBX	Univeral Serial Bus Extender
ASW	Audio Switcher	EDB	Electrical Distribution Box	MD	Mini Disc	RIP	Rack Input Panel		
AT	Audio Tie Line	EFX	Effects Processor	MDCF	Matrix Digital Card Frame	RIS	Remote Intercom Station	V	Video
ATI	Audio Teleconference Interface	ELTC	Emergency Lighting Transfer Cabinet	MDR	Motion Detector	RK	Rack Lights	VC/SS	Volume Control / Selector Switch
ATN	Attenuator	EN	Ethernet	MFP	Microphone Facility Panel	RM	Relay Module	VCA	Voltage Controlled Amplifier
AV	Audio Video	ENC	Encoder	MFS	Mid Frequency Speaker	RMS	RGB Matrix Switcher	VCC	Video Conference Camera
AVC	Audio Video Controller	ENG	Electronic News Gathering	MI	Midi Interface	RPN	Rack Panel	VCR	Video Cassette Recorder
AVD	Audio Video Distribution	EQ	Equalizer	MIDI	MIDI	RPT	Repeater	VCU	Video Conferencing Unit
AVI	Audio Video Interface	ERK	Equipment Rack	MIS	Main Intercom Station	RSC	RGB System Controller	VD	Video Display
AVN	Audio Video Network	EXG	Expander/Gate	MIX	Mixer	RSI	RGB Switching Interface	VDA	Video Distribution Amplifier
AVP	Audio Video Panel	EXT	Extender	MKB	Monitor Keyboard Sliding Shelf	RSRS	Rotating Sliding Rail System	VE	Video Encoder
AVR	Audio Video Router			MM	Microphone Module	RSW	RGB Switcher	VEH	Video Encoder Hub
AXF	Auto Transformer	F	Fiber	MMC	Media Matrix Computer			VFX	Video Effects Processor
		FB	Floor Box	MMP	Monitor Mix Panel	S	Speaker Level	VIC	Visual Concert
BC	Battery Charge	FBS	Feed Back Suppresser	MMPA	Measurement Mix Pre Amplifier	SAT	Satellite	VIP	Video Input Panel
BDP	Blu-Ray Disc Player	FLM	Floor Monitor	MOD	Modulator	SB	Bass Speaker	VL	Voice Lift
BOB	Break Out Box	FMA	FM Antenna	MON	Monitor	SC	Ceiling Speaker	VLCF	Voice Lift Card Cage Frame
BP	Belt Pack	FMR	FM Receiver	MOU	Mouse	SCB	Cinema Speaker Bass	VM	Video Monitor
		FMT	FM Tuner	MP	Media Panel	SCD	Speaker Control Distribution	VMS	Video Matrix Switcher
C	Conduit	FMTA	FM Transmitting Antenna	MPA	Microphone Pre-Amplifier	SCF	SC Fiber Connector	VOL	Volume Control
CAM	Video Camera	FMTR	FM Transmitter	MPN	Monitor Panel	SCN	Cinema Speaker	VOP	Voice Over Paging Module
CAS	Cassette Deck	FOH	Front Of House	MPS	Motorized Projection Screen	SCP	System Control Pad	VPB	Video Patch Bay
CASR	Cassette Deck Recorder	FP	Facility Panel	MR	Message Repeater	SDB	Speaker Distribution Box	VPJ	Video Projector
CATV	Community Antenna Television	FPL	Floor Panel	MRP	MD Recorder Player	SER	Serial	VPM	Video Program Monitor
CBT	Cable Tray	FREC	Fiber Receiver	MSC	Main System Controller	SFF	Front Fill Speaker	VPJRM	Video Projector Rotating Mount
CC	Contact Closure	FT	Fiber Tie Line	MSF	Master Fader	SG	Grade Speaker	VS	Video System Switcher
CCC	Contact Closure Card	FTP	Fiber Tie Panel	MSP	Microphone Splitter	SGP	Signal Processor	VSC	Video Scan Converter
CCD	CD/Cassette Deck	FTMT	Fiber Transmitter	MSR	Microphone Splitter Rack	SH	Horn Speaker	VSL	Video Scaler
CCF	Card Cage Frame	FW	Firewire	MSV	Media Server	SHF	Shelf	VSP	Video Signal Processor
CCU	Camera Control Unit			MSW	Matrix Switcher	SIS	Set Integrated Speaker	VSPC	Video Screen Panel Control
CDB	Crestron Distribution Block	GEQ	Graphic Equalizer	MXP	Mixer Pre-Amplifier	SIW	In-Wall Speaker	VSV	Video Server
CDC	Compact Disc Changer	GEN	Sync Generator			SJB	Speaker Junction Box	VSW	Video Switcher
CDP	Compact Disc Player	GNM	Gooseneck Microphone	NADU	Network Audio Distribution Amp	SLA	Speaker Line Array	VT	Video Tie Line
CEM	Control Module			NET	Network Outlet	SMP	Stage Manager Panel		
CG	Character Generator	HS	Headset	NHB	Network Hub	SMR	Stage Manager Rack	WAD	Wireless Antenna Distribution
CIM	Control Interface Module	HPR	Headphone Remote Station	NI	Network Interface	SMS	Scaling Matrix Switcher	WB	White Board
CIU	Computer Interface Unit	HDTV	High Definition Television	NMCPU	Network Manager CPU	SMSW	Satellite Multiswitch	WBC	Window Blind Control
CM	Card Module	HDW	Hardware	NSG	Noise Gate	SMX	Splitter Mixer	WBP	Wireless Belt Pack
CME	Control Module Extended	HFS	High Frequency Speaker	NSS	Network Source Switch	SNI	Sensor Network Interface	WER	Wireless Ethernet Router
CMIC	Ceiling Microphone	HHM	Hand Held Microphone	NT	Network Terminator	SP	Speaker	WFM	Wafeorm Monitor
CN	CobraNet	HRB	Headset Remote Box	NWS	Network Switch	SPCL	Speaker Cluster	WGA	Wireless Gateway Antenna
CNT	Control	HTS	Home Theater System			SPG	Program Speaker	WGW	Wireless Gateway
CON	Converter			OPJ	Optical Projector	SPJ	Slide Projector	WLM	Wireless Microphone
COD	Codec Unit	IAA	Integrated Audio Amplifier			SPN	Stage Panel	WLU	Wireless Unit
CP	Conduit Pocket	IBP	Intercom Belt Pack	P	Power	SPP	Speaker Patch Panel	WM	Wireless Mouse
CPIS	Control Plug In Station	IC	Intercom	PA	Power Amplifier	SPR	Speaker Processor	WMA	Wireless Mic Antenna
CPL	Compressor/Limiter	IFC	Interface Card	PAD	Pad	SPT	Speaker Portable	WMAP	Wireless Mic Antenna Panel
CPP	Central Paging Processor	ICS	Intercom Station	PB	Push Button	SRA	Stereo Receiver Amp	WMG	Wire Manager
CPU	Central Processing Unit	ID	Interactive Display	PBR	Play Back Rack	SS	Surround Sound Speaker	WMKA	Wireless Mic Keyboard Antenna
CRK	Control Rack	IH	Intercom Handset	PC	Personal Computer	SSA	Solid State Audio Source	WMKS	Wireless Mouse Keyboard Antenna
CSF	Call Signal Flasher	IHS	Intercom Head Set	PCC	Personal Computer Control	SSF	Sliding Shelf	WMR	Wireless Mic Receiver
CT	Control	IMS	Intercom Main Station	PCD	Power Conditioner	SSV	Streaming Server	WP	Wall Plate
CTN	Cable Tuner	IOP	Input/Output Panel	PCLD	Projector Controller With Line Doubler	SSW	Serve Switch	WPN	Wall Panel
CTS	Computer Training System	IR	Infrared	PD	Plasma Display	STU	Satellite Tuner	WSI	Work Station Interface
CVM	Computer Video Monitor	IRB	IR Broadcast	PDL	Plasma Display Lift	SUM	Summing Amplifier	WTA	Wireless Touch Panel Adapter
		IRE	IR Emitter	PEQ	Parametric Equalizer	SV	S-Video	WTP	Wireless Touch Panel
DA	Distribution Amp	IRM	IR Modulator	PGM	Program Monitor	SVC	Slide to Video Converter	WTPR	Wireless Touch Panel Receiver
DAB	Digital Audio Bus	IRR	IR Radiator	PI	Power Injector	SVDA	S-Video Distribution Amp	WTR	Wireless Transmitter Receiver

ABBREVIATIONS

A 0	Above Zero Floor Level			GC	General Contractor	OC	On Center	SHP	Shielded Pair
ACT	Above Counter Top	DIA	Diameter			OD	Outer Diameter	SIM	Similar
AFB	Above Floor Below	DR	Door	HR	Home Run	OFCI	Owner Furnished Contractor Installed	SM	Stage Manager
AFC	Above Finished Ceiling					OFE	Owner Furnished Equipment	STD	Standard
AFF	Above Finished Floor	(E)###	Existing	IW	In Wall	OFOI	Owner Furnished Owner Installed		
AH	Above Header	E.C.	Empty Conduit					TST	Test Set
AS	Above Slab	EC	Electrical Contractor	LP	Lightning Protector	PF	Press Feed	TYP	Typical
		EL	Elevation	LRR	Lightning Room Rack	P/O	Part Of		
BFC	Below Finished Ceiling	ELEC	Electrical	LTG	Lighting	POC	Point of Connection	UBC	Uniform Building Code
BGM	Background Music	EOL	End Of Line			PRG	Program	UON	Unless Otherwise Noted
BOH	Back Of House	EQUIP	Equipment	MISC	Miscellaneous	PROJ	Project		
BTU	British Thermal Units			MOM	Momentary	PS	Pull String	VIF	Verify In Field
		FAN	Fan Panel	MTD	Mounted	PSCH	Project Standard Control Height		
CAB	Cabinet	FBO	Furnished By Owner	MTL	Metal	PSRH	Project Standard Receptacle Height	WP	Weather Proof
CATV	Cable TV	FCA	Finished Ceiling Above			PSSH	Project Standard Switch Height		
CBC	California Building Code	FIN	Finished	NC	Normally Closed	PWR	Power		
CL	Center Line	FOH	Front Of House	NIC	Not In Contract				
CLG	Ceiling	FSF	Folding Shelf	NO	Normally Open	RCP	Reflected Ceiling Plan		
CM	Construction Manager	(F)	Future	NTS	Not To Scale				
CO	Conduit Only					SECT	Section		

FACILITY INPUT SYMBOL SCHEDULE AND DESCRIPTIONS

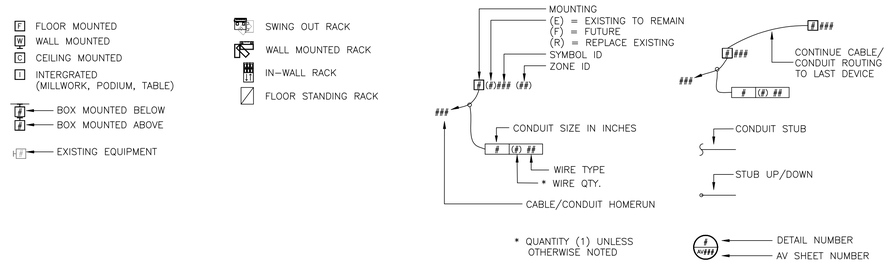

WIRE SCHEDULE

NOTE: CONTRACTOR TO USE PLENUM RATED CABLE WHERE REQUIRED BY CODE.

TYPE	APPLICATION	DESCRIPTION (FIXED INSTALL CABLE)	O.D.	MANUF.	PART NO.
A1	AUDIO ANALOG/DIGITAL CABLE	ANALOG/DIGITAL AUDIO CABLE, MICROPHONE AND LINE LEVEL WIRING, LESS THAN +24 dBu, FROM 20Hz TO 20kHz, 24 AWG, IMPEDANCE 110Ω ±20%, CAPACITANCE 26pF/FT, 100% SHIELDED, STRANDED TWISTED PAIR	0.177	BELDEN	1800B
C1	CRESTRON CONTROL CABLE	SYSTEM CONTROL CABLE, AMX-CRESTRON / (DATA) - 22 AWG,1PR SHIELDED, CAPACITANCE 12.5 pf/FT, STRANDED / (PWR) - 12 AWG, 2 CONDUCTOR STRANDED	0.330	CRESTRON	CRESTNET-HP
C2	CONTROL/PWR SUPPLY	CONTROL CABLE AC/DC, 22 AWG, 2 PAIR, TWISTED, TINNED COPPER	0.233	BELDEN	9744
C3	CONTROL/PWR SUPPLY	CONTROL CABLE AC/DC, 24AWG, 4 PAIR, TWISTED, TINNED COPPER	0.281	BELDEN	9746.000000
D1	DATA SERIAL CABLE RS232-485	SERIAL DATA CABLE, 28 AWG, TINNED COPPER, 100% FOIL, 65% TC BRAID SHIELD, TWISTED 2 PAIR	0.220	BELDEN	8132.000000
D3	CAT 6 DATA NETWORK CABLE	CATEGORY 6 DATA CABLE, 23 AWG, UNBONDED PAIR CABLES, SOLID BARE COPPER, MAX. ATTENUATION 28.3dB/100m @ 200MHz, MAX DELAY SKEW 45ns/100 m , NOM MUTUAL CAPACITANCE @ 1KHz 15pF/FT, MAX DC RESISTANCE 8.2Ω/100m	0.220	BELDEN	2412.000000
M8	A/V STP CABLE	FOUR TWISTED PAIR, POLYESTER TAPE, DRAIN, SHIELD, BRAID, RIPCORD AND OVERALL PVC JACKET, CAPACITANCE 330 pF/ft, DELAY SKEW 45nS/100m	0.244	CRESTRON	DM-CBL-8G
R1	LOW LOSS 50Ω WIRELESS	RG58C/U, 20 AWG, 50Ω, 95% BRAIDED SHIELD, NOM ATTN -21.5dB/100ft @ 1GHz	0.195	BELDEN	8262.000000
R2	LOW LOSS 50Ω WIRELESS	RG8X/U, 16 AWG, 50Ω, 95% BRAIDED SHIELD, NOM ATTN -11.2dB/100ft @ 1GHz	0.242	BELDEN	9258.000000
S2	SPEAKER	LOUDSPEAKER LEVEL OR CIRCUIT WIRING GREATER THAN +24dBu, FROM 20Hz TO 20kHz, 14 AWG, STRANDED, TWISTED PAIR WITH PVC JACKET.	0.260	BELDEN	5100UP
S3	SPEAKER	LOUDSPEAKER LEVEL OR CIRCUIT WIRING GREATER THAN +24dBu, FROM 20Hz TO 20kHz, 12 AWG, STRANDED, TWISTED PAIR WITH PVC JACKET.	0.302	BELDEN	5000UP
S4	SPEAKER	LOUDSPEAKER LEVEL OR CIRCUIT WIRING GREATER THAN +24dBu, FROM 20Hz TO 20kHz, 10 AWG, STRANDED, TWISTED PAIR WITH PVC JACKET.	0.356	BELDEN	5T00UP
V10	HDMI CABLE	HDMI CABLE, 100Ω, 24AWG	0.750	EXTRON	HDMI PRO SERIES

PICO BRANCH LIBRARY

2201 Pico Blvd.
Santa Monica, CA 90404

PROJECT

KoningEizenberg Architecture
1454 25th St, Santa Monica, CA 90404
310.828.6131 info@kearch.com
310.828.0719 fax www.kearch.com

ARCHITECT'S PROJECT NO.
1001

ARCHITECT

All designs, ideas, arrangements and plans indicated by these drawings are the property and copyright of the Architect and shall neither be used on any other work nor be disclosed to any other person for any use whatsoever without written permission.

Koning Eizenberg Architecture and/or its principals and employees waives any and all liability or responsibility for problems that may occur when these plans, drawings, specifications, and/or designs are followed without the professional's guidance with ambiguities, or conflicts which are alleged.

Veneklasen Associates
Consultants In Acoustics | AV | IT | Environmental Noise
1711 Sixteenth Street
Santa Monica, CA 90404
(310) 450-1733
www.veneklasen.com

CONSULTANT

City of Santa Monica
Architecture Services
1437 4TH STREET, SUITE 300
SANTA MONICA, CA 90401
TEL. (310) 458-2205
FAX. (310) 399-1541
architecture@smgov.net

DATE : 20
SUBMITTED BY :

DATE : 20
APPROVED BY :
Miriam Mulder,
Architecture Services Manager

CITY OF SANTA MONICA
DEPARTMENT OF PUBLIC WORKS

REVIEWED BY : DATE : 20

REVIEWED BY : DATE : 20

REVIEWED BY : DATE : 20

CITY CLIENT

NO.	DATE	BY	DESCRIPTION

REVISIONS

ISSUE
65% CONSTRUCTION DOCUMENTS / BID SET

DATE
01/23/2012

DRAWING NO. **6693**

SHEET OF SHEETS

SHEET TITLE
ABBREVIATIONS NOTES AND SYMBOLS

SHEET NO.
AV0.02

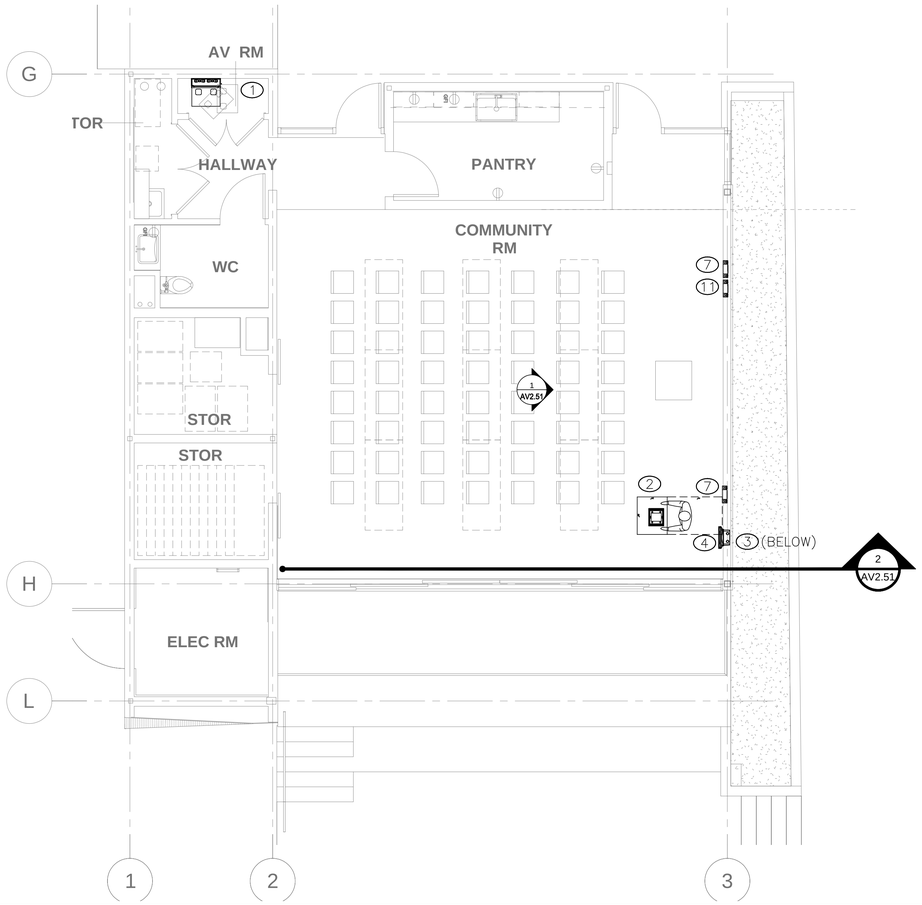

COMMUNITY ROOM FLOOR PLAN

SCALE: 1/4" = 1'-0\ 1

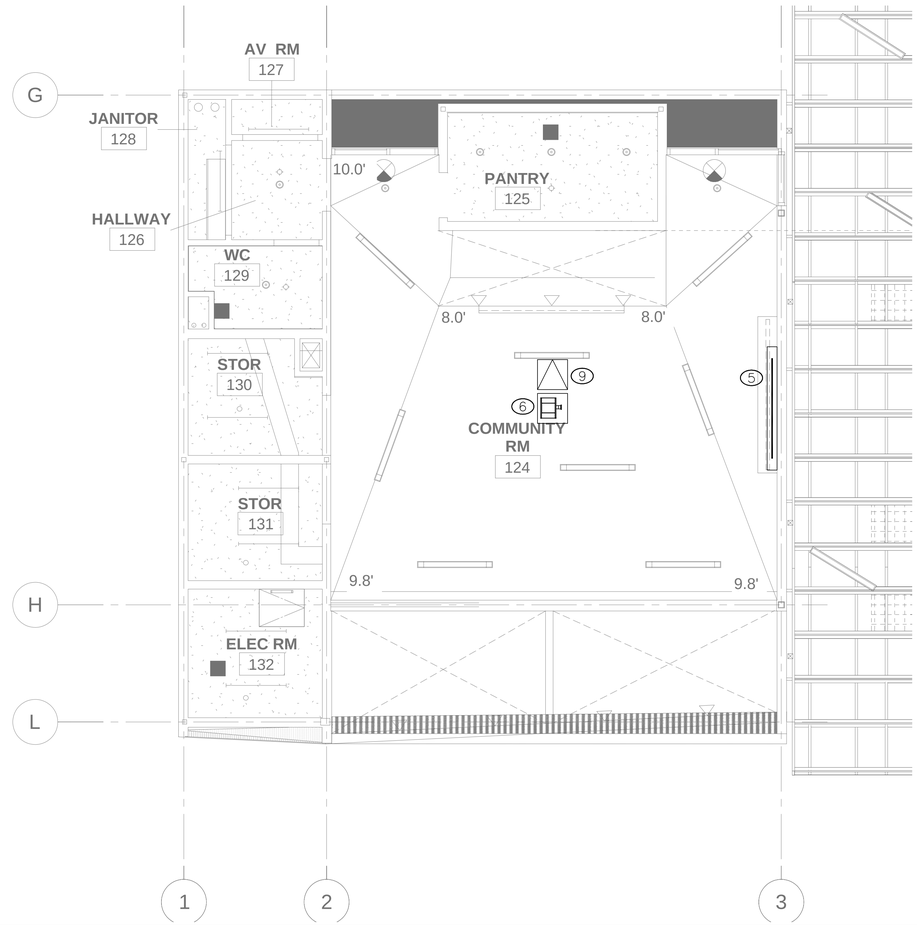

COMMUNITY ROOM REFLECTED CEILING PLAN

SCALE: 1/4" = 1'-0\ 2

AV EQUIPMENT NOTES:

1. EQUIPMENT RACK
   - *PRESENTATION SWITCHER
   - *POWER AMPLIFIER
   - *BLU-RAY/DVD PLAYER WITH TUNER
   - *CONTROL SYSTEM
   - *ASSISTIVE LISTENING SYSTEM
   - *WIRELESS MICROPHONE SYSTEM
2. LECTERN
   - *GOOSENECK MICROPHONE
   - *AV INPUT PANEL
3. AV WALL BOX
   - *(4) MIC INPUTS
   - *(1) LINE OUTPUT
   - *(1) DIGITAL AND ANALOG VIDEO INPUT
4. DOCKABLE TOUCH PANEL
5. 16:10 94" DIAG. RECESSED PROJECTION SCREEN
6. WXGA VIDEO PROJECTOR ON A PROJECTOR LIFT (ALTERNATE TO BE A POLE-MOUNTED PROJECTOR)
7. IN-WALL SPEAKER FOR SOUND REINFORCEMENT AND PAGING SYSTEMS
8. IN-WALL PAGING SPEAKER
9. ACCESS PANEL (2' x 2')
10. RECESSED CEILING SPEAKER FOR PAGING
11. IN-WALL SUBWOOFER

PICO BRANCH LIBRARY

2201 Pico Blvd.
Santa Monica, CA 90404

PROJECT

KoningEizenberg Architecture
1454 25th St, Santa Monica, CA 90404

310.828.6131 info@keearch.com
310.828.0719 fax www.keearch.com

ARCHITECT'S PROJECT NO.
1001

ARCHITECT

All designs, ideas, arrangements and plans indicated by these drawings are the property and copyright of the Architect and shall neither be used on any other work nor be disclosed to any other person for any use whatsoever without written permission.

Koning Eizenberg Architecture and/or its principals and employees waives any and all liability or responsibility for problems that may occur when these plans, drawings, specifications, and/or designs are followed without the professional's guidance with ambiguities, or conflicts which are alleged.

Veneklasen Associates
Consultants in Acoustics | AV | IT | Environmental Noise
1711 Sixteenth Street
Santa Monica, CA 90404
(310) 450-1733
www.veneklasen.com

CONSULTANT

City of Santa Monica
Architecture Services

1437 4TH STREET, SUITE 300
SANTA MONICA, CA 90401
TEL. (310) 458-2205
FAX. (310) 399-1541
architecture@smgov.net

SUBMITTED BY : DATE : 20

APPROVED BY : DATE : 20
Miriam Mulder,
Architecture Services Manager

CITY OF SANTA MONICA
DEPARTMENT OF PUBLIC WORKS

REVIEWED BY : DATE : 20

REVIEWED BY : DATE : 20

REVIEWED BY : DATE : 20

CITY CLIENT

NO.	DATE	BY	DESCRIPTION

REVISIONS

ISSUE
65% CONSTRUCTION DOCUMENTS / BID SET

DATE
01/23/2012

DRAWING NO. **6693**

SHEET OF SHEETS

SHEET TITLE
COMMUNITY ROOM EQUIPMENT PLAN

SHEET NO.
AV1.01A

SHEET OF

DWG. NO. - -

TITLE OF PROJECT :

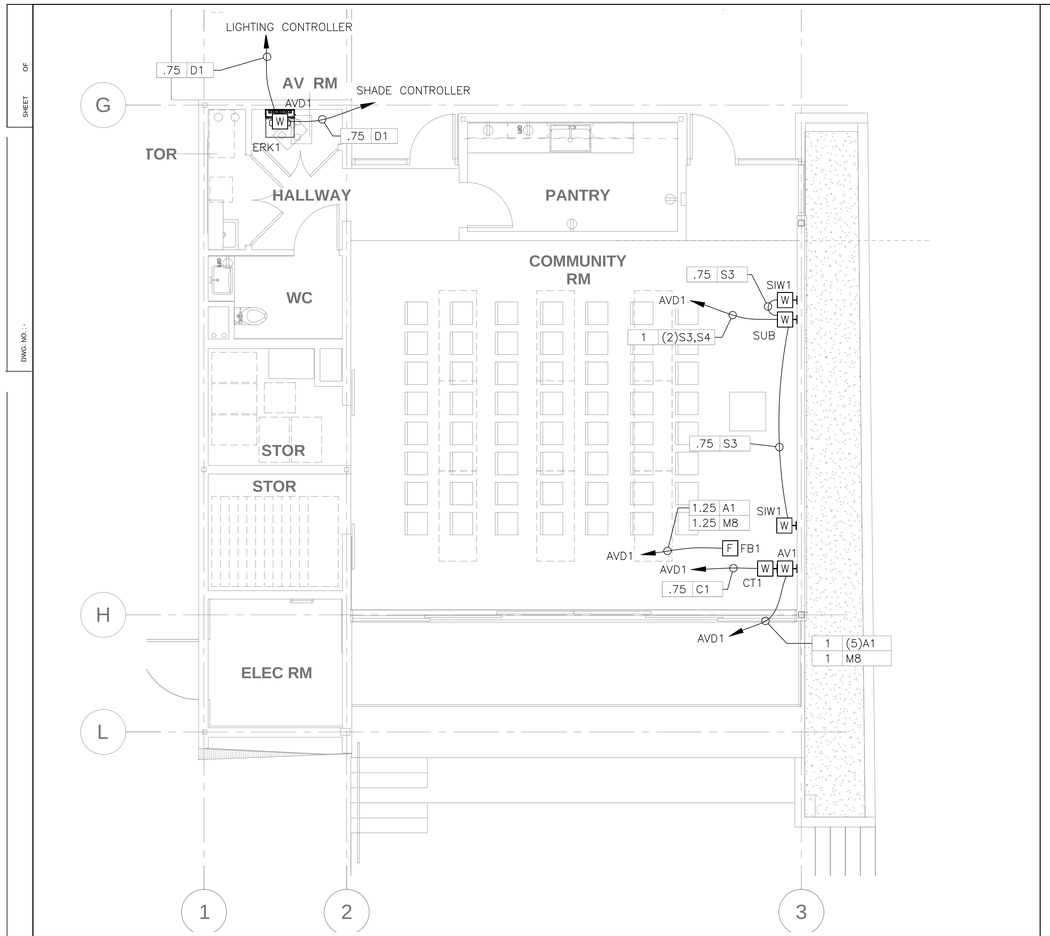

COMMUNITY ROOM FLOOR PLAN | SCALE: 1/4" = 1'-0\ | 1

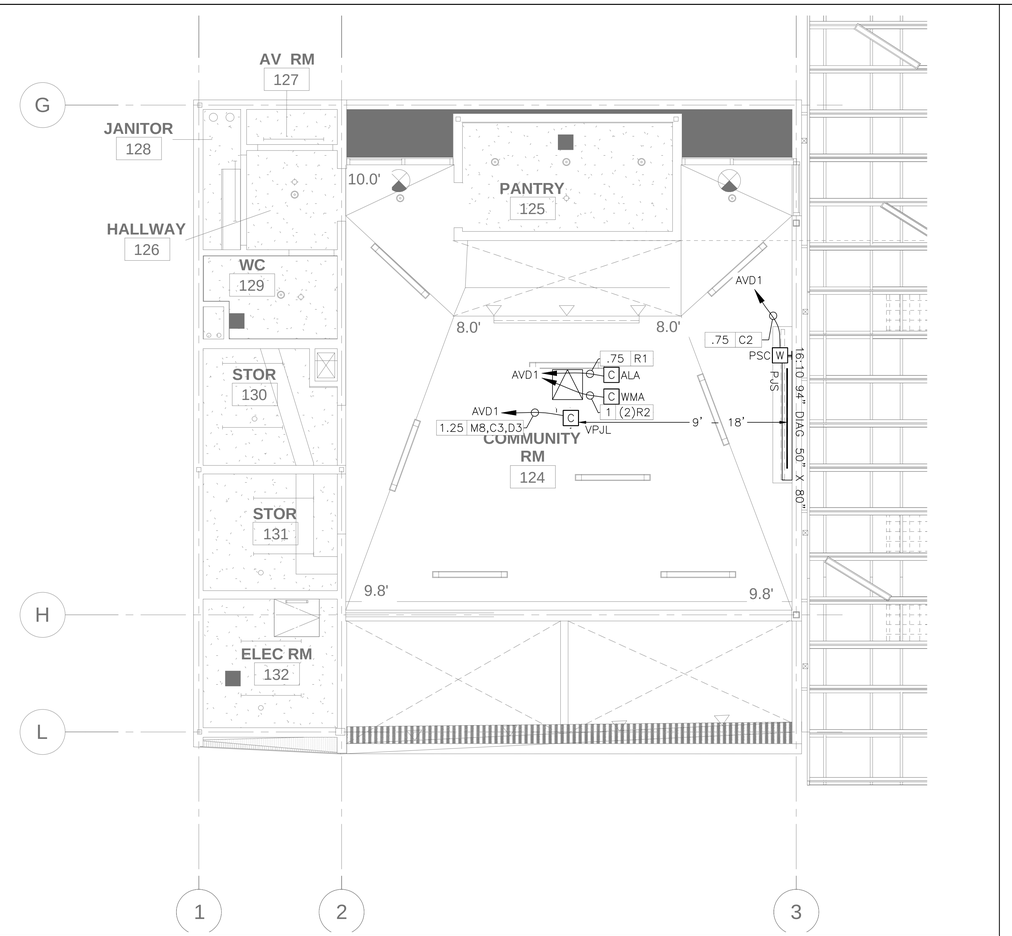

COMMUNITY ROOM REFLECTED CEILING PLAN | SCALE: 1/4" = 1'-0\ | 2

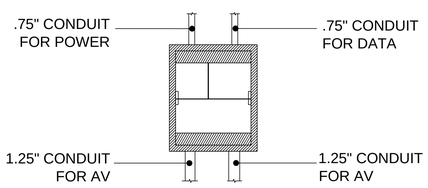

FLOOR BOX "FB1" CONDUIT LAYOUT | SCALE: NTS | A

PICO BRANCH LIBRARY

2201 Pico Blvd.
Santa Monica, CA 90404

PROJECT

KoningEizenberg Architecture
1454 25th St, Santa Monica, CA 90404

310.828.6131 info@kearch.com
310.828.0719 fax www.kearch.com

ARCHITECT'S PROJECT NO.
1001

ARCHITECT

All designs, ideas, arrangements and plans indicated by these drawings are the property and copyright of the Architect and shall neither be used on any other work nor be disclosed to any other person for any use whatsoever without written permission.

Koning Eizenberg Architecture and/or its principals and employees waives any and all liability or responsibility for problems that may occur when these plans, drawings, specifications, and/or designs are followed without the professional's guidance with ambiguities, or conflicts which are alleged.

Veneklasen Associates
Consultants in Acoustics | AV | IT | Environmental Noise
1711 Sixteenth Street
Santa Monica, CA 90404
(310) 450-1733
www.veneklasen.com

CONSULTANT

City of Santa Monica
Architecture Services
1437 4TH STREET, SUITE 300
SANTA MONICA, CA 90401
TEL. (310) 458-2205
FAX. (310) 399-1541
architecture@smgov.net

SUBMITTED BY : _____ DATE : _____ 20 __

APPROVED BY : _____ DATE : _____ 20 __
Miriam Mulder,
Architecture Services Manager
CITY OF SANTA MONICA
DEPARTMENT OF PUBLIC WORKS

REVIEWED BY : _____ DATE : _____ 20 __

REVIEWED BY : _____ DATE : _____ 20 __

REVIEWED BY : _____ DATE : _____ 20 __

CITY CLIENT

NO.	DATE	BY	DESCRIPTION

REVISIONS

ISSUE
65% CONSTRUCTION DOCUMENTS / BID SET

DATE
01/23/2012

DRAWING NO. **6693**

SHEET OF SHEETS

SHEET TITLE
COMMUNITY ROOM INFRASTRUCTURE PLAN

SHEET NO.
AV1.01B

SHEET OF

DWG. NO. : -

TITLE OF PROJECT :

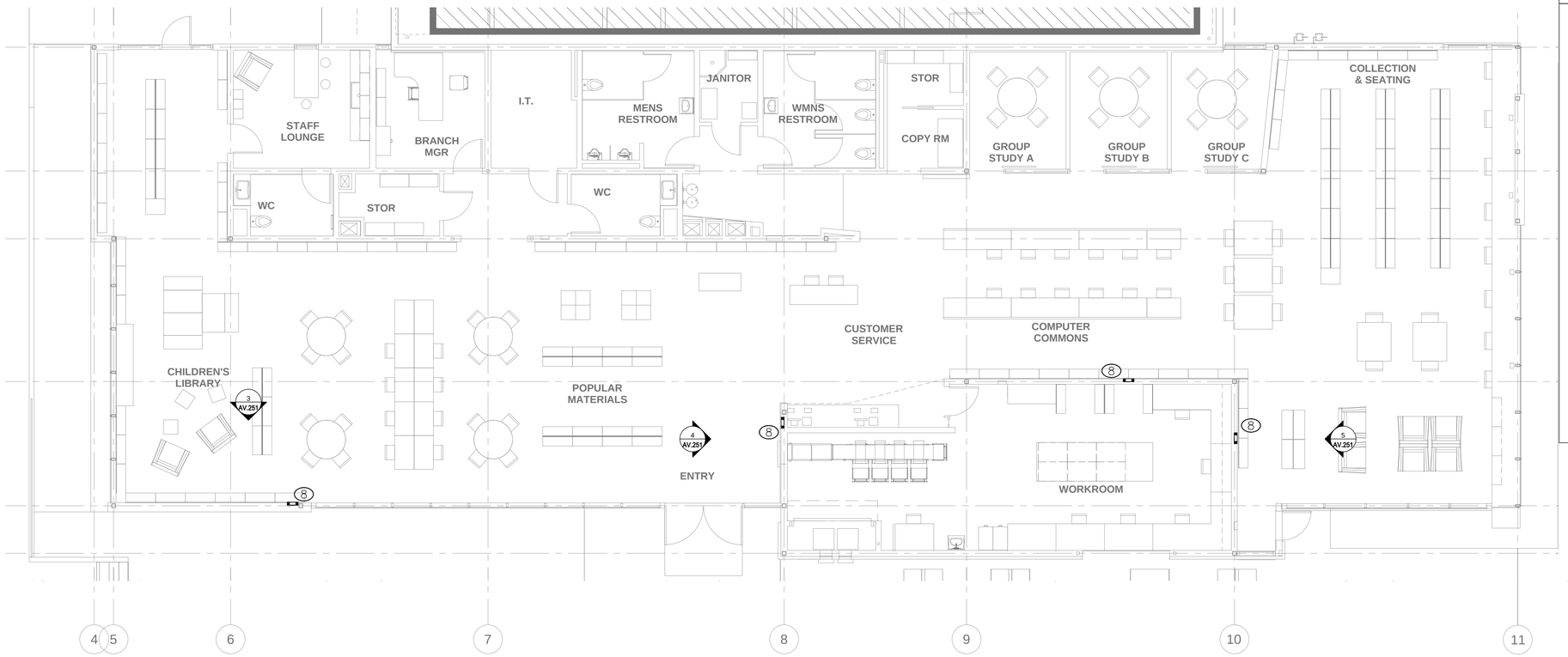

AV EQUIPMENT NOTES:

1. EQUIPMENT RACK
   - *PRESENTATION SWITCHER
   - *POWER AMPLIFIER
   - *BLU-RAY/DVD PLAYER WITH TUNER
   - *CONTROL SYSTEM
   - *ASSISTIVE LISTENING SYSTEM
   - *WIRELESS MICROPHONE SYSTEM
2. LECTERN
   - *GOOSENECK MICROPHONE
   - *AV INPUT PANEL
3. AV WALL BOX
   - *(4) MIC INPUTS
   - *(1) LINE OUTPUT
   - *(1) DIGITAL AND ANALOG VIDEO INPUT
4. DOCKABLE TOUCH PANEL
5. 16:10 94" DIAG. RECESSED PROJECTION SCREEN
6. WXGA VIDEO PROJECTOR ON A PROJECTOR LIFT (ALTERNATE TO BE A POLE-MOUNTED PROJECTOR)
7. IN-WALL SPEAKER FOR SOUND REINFORCEMENT AND PAGING SYSTEMS
8. IN-WALL PAGING SPEAKER
9. ACCESS PANEL (2' x 2')
10. RECESSED CEILING SPEAKER FOR PAGING
11. IN-WALL SUBWOOFER

LIBRARY FLOOR PLAN

SCALE: 3/16" = 1'

1

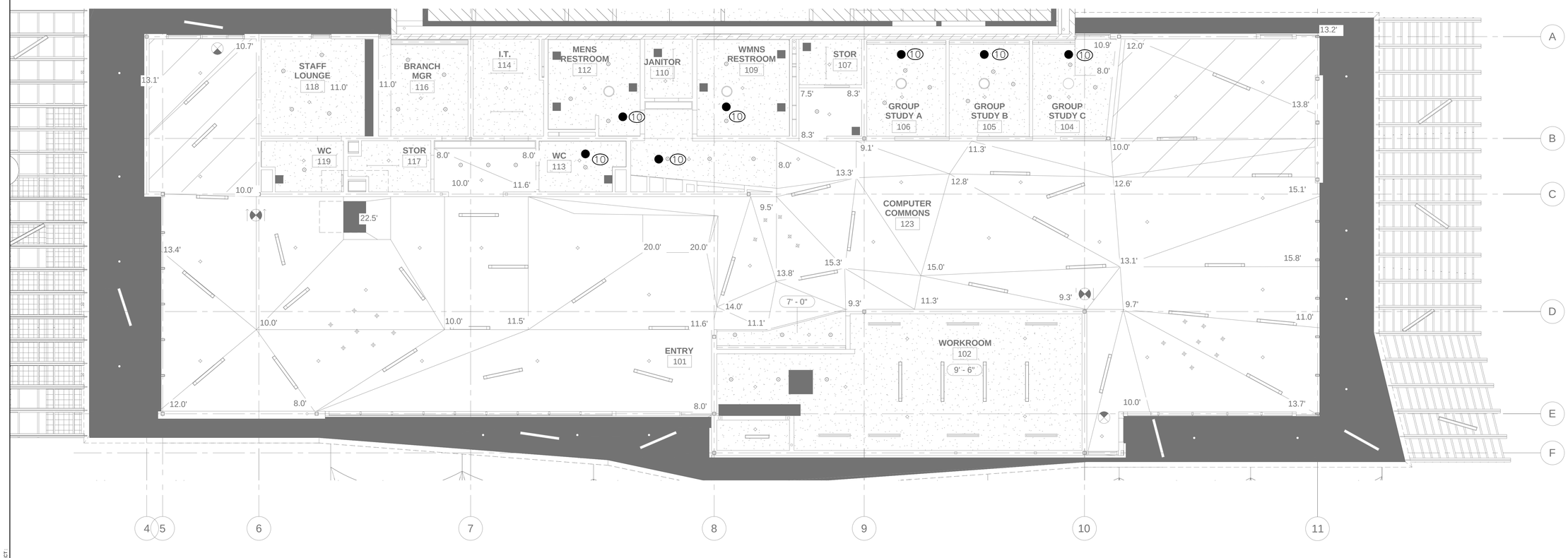

LIBRARY REFLECTED CEILING PLAN

SCALE: 3/16" = 1'

2

PICO BRANCH LIBRARY

2201 Pico Blvd.
Santa Monica, CA 90404

PROJECT

KoningEizenberg Architecture
1454 25th St, Santa Monica, CA 90404
310.828.6131 info@kearch.com
310.828.0719 fax www.kearch.com

ARCHITECT'S PROJECT NO.
1001

ARCHITECT

All designs, ideas, arrangements and plans indicated by these drawings are the property and copyright of the Architect and shall neither be used on any other work nor be disclosed to any other person for any use whatsoever without written permission.

Koning Eizenberg Architecture and/or its principals and employees waives any and all liability or responsibility for problems that may occur when these plans, drawings, specifications, and/or designs are followed without the professional's guidance with ambiguities, or conflicts which are alleged.

Veneklasen Associates
Consultants in Acoustics | AV | IT | Environmental Noise
1711 Sixteenth Street
Santa Monica, CA 90404
(310) 450-1733
www.veneklasen.com

CONSULTANT

City of Santa Monica
Architecture Services
1437 4TH STREET, SUITE 300
SANTA MONICA, CA 90401
TEL. (310) 458-2205
FAX. (310) 399-1541
architecture@smgov.net

DATE : 20
SUBMITTED BY :

DATE : 20
APPROVED BY :
Miriam Mulder,
Architecture Services Manager
CITY OF SANTA MONICA
DEPARTMENT OF PUBLIC WORKS

REVIEWED BY : DATE : 20

REVIEWED BY : DATE : 20

REVIEWED BY : DATE : 20

CITY CLIENT

NO.	DATE	BY	DESCRIPTION

REVISIONS

ISSUE
65% CONSTRUCTION DOCUMENTS / BID SET

DATE
01/23/2012

DRAWING NO. **6693**

SHEET OF SHEETS

SHEET TITLE
LIBRARY
EQUIPMENT PLAN

SHEET NO.
AV1.02A

SHEET OF

DWG. NO. -

TITLE OF PROJECT

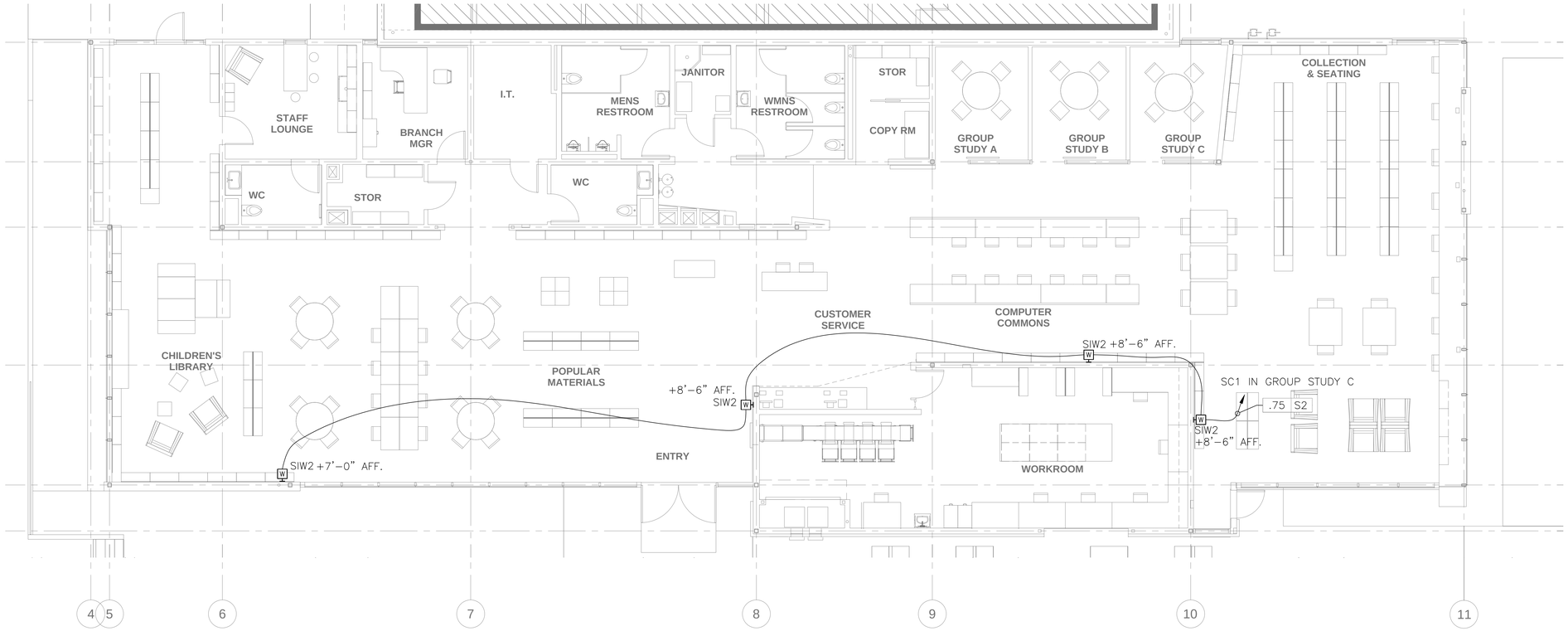

LIBRARY FLOOR PLAN

SCALE: 3/16" = 1'

1

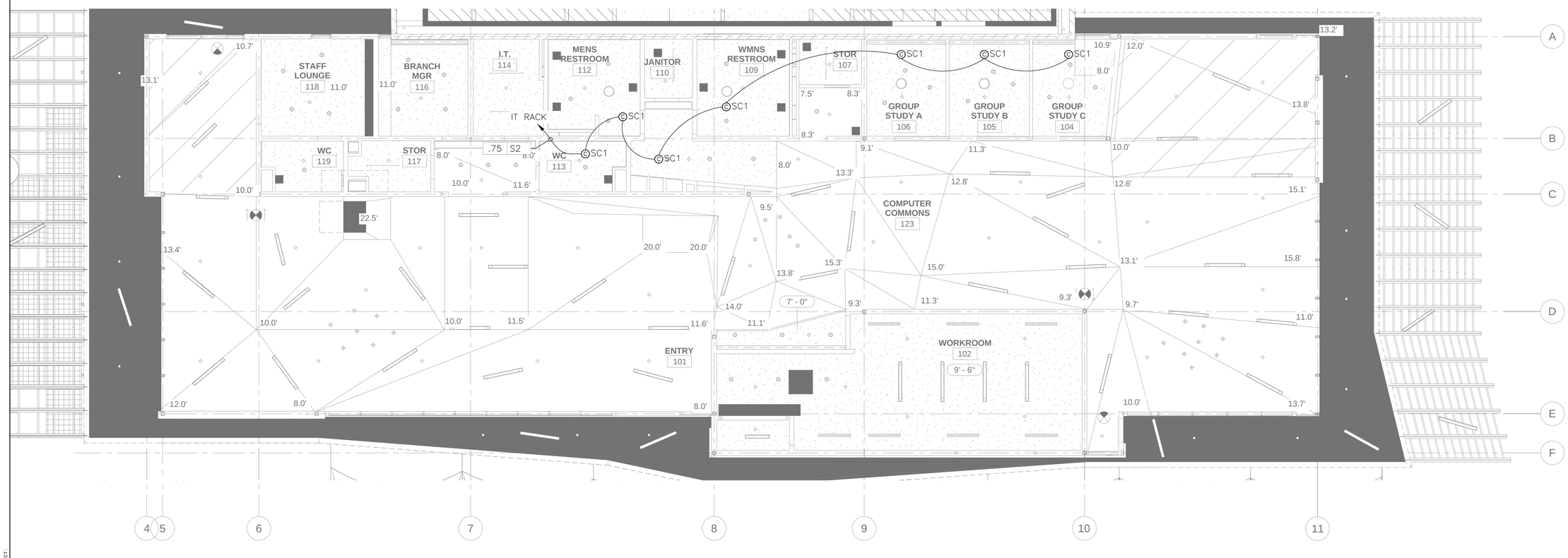

LIBRARY REFLECTED CEILING PLAN

SCALE: 3/16" = 1'

2

PICO BRANCH LIBRARY

2201 Pico Blvd.
Santa Monica, CA 90404

PROJECT

KoningEizenberg Architecture
1454 25th St, Santa Monica, CA 90404

310.828.6131 info@kearch.com
310.828.0719 fax www.kearch.com

ARCHITECT'S PROJECT NO.
1001

ARCHITECT

All designs, ideas, arrangements and plans indicated by these drawings are the property and copyright of the Architect and shall neither be used on any other work nor be disclosed to any other person for any use whatsoever without written permission.

Koning Eizenberg Architecture and/or its principals and employees waives any and all liability or responsibility for problems that may occur when these plans, drawings, specifications, and/or designs are followed without the professional's guidance with ambiguities, or conflicts which are alleged.

Veneklasen Associates
Consultants in Acoustics | AV | IT | Environmental Noise
1711 Sixteenth Street
Santa Monica, CA 90404
(310) 450-1733
www.veneklasen.com

CONSULTANT

City of Santa Monica
Architecture Services

1437 4TH STREET, SUITE 300
SANTA MONICA, CA 90401
TEL. (310) 458-2205
FAX. (310) 399-1541
architecture@smgov.net

SUBMITTED BY : DATE : 20

APPROVED BY : DATE : 20
Miriam Mulder,
Architecture Services Manager
CITY OF SANTA MONICA
DEPARTMENT OF PUBLIC WORKS

REVIEWED BY : DATE : 20

REVIEWED BY : DATE : 20

REVIEWED BY : DATE : 20

CITY CLIENT

NO.	DATE	BY	DESCRIPTION

REVISIONS

ISSUE
65% CONSTRUCTION DOCUMENTS / BID SET

DATE
01/23/2012

DRAWING NO. **6693**

SHEET OF SHEETS

SHEET TITLE
LIBRARY INFRASTRUCTURE PLAN

SHEET NO.
AV1.02B

SHEET OF

DWG. NO. -

TITLE OF PROJECT

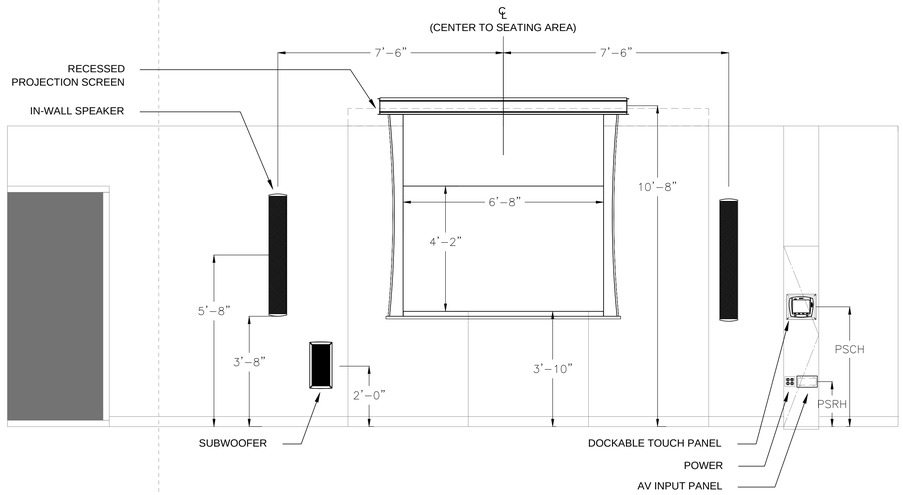

COMMUNITY ROOM ELEVATION | SCALE: 1/2" = 1' | 1

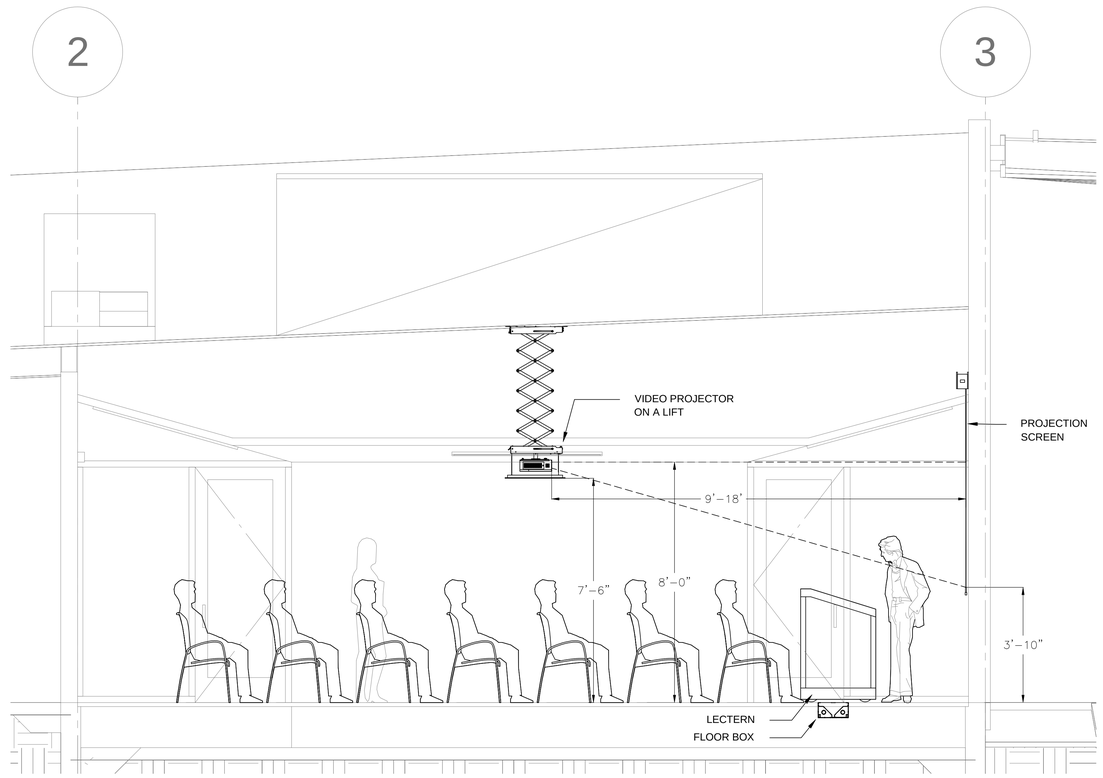

COMMUNITY ROOM SECTION | SCALE: 1/2" = 1' | 2

LIBRARY ELEVATION | SCALE: 1/2" = 1' | 3

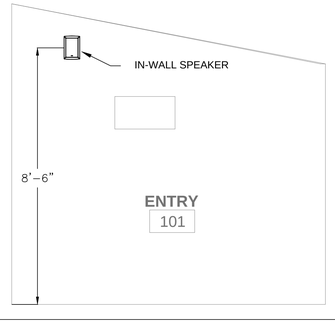

LIBRARY ELEVATION | SCALE: 1/2" = 1' | 4

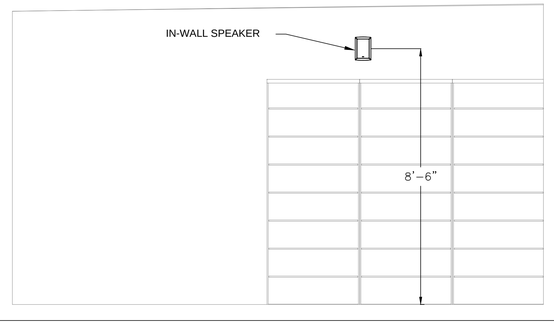

LIBRARY ELEVATION | SCALE: 1/2" = 1' | 5

PICO BRANCH LIBRARY

2201 Pico Blvd.
Santa Monica, CA 90404

PROJECT

KoningEizenberg Architecture
1454 25th St, Santa Monica, CA 90404

310.828.6131 info@kearch.com
310.828.0719 fax www.kearch.com

ARCHITECT'S PROJECT NO.
1001

ARCHITECT

All designs, ideas, arrangements and plans indicated by these drawings are the property and copyright of the Architect and shall neither be used on any other work nor be disclosed to any other person for any use whatsoever without written permission.

Koning Eizenberg Architecture and/or its principals and employees waives any and all liability or responsibility for problems that may occur when these plans, drawings, specifications, and/or designs are followed without the professional's guidance with ambiguities, or conflicts which are alleged.

Veneklasen Associates
Consultants in Acoustics | AV | IT | Environmental Noise
1711 Sixteenth Street
Santa Monica, CA 90404
(310) 450-1733
www.veneklasen.com

CONSULTANT

City of Santa Monica
Architecture Services

1437 4TH STREET, SUITE 300
SANTA MONICA, CA 90401
TEL. (310) 458-2205
FAX. (310) 399-1541
architecture@smgov.net

DATE : _____ 20 __
SUBMITTED BY :

DATE : _____ 20 __
APPROVED BY :
Miriam Mulder,
Architecture Services Manager
CITY OF SANTA MONICA
DEPARTMENT OF PUBLIC WORKS

REVIEWED BY : DATE : _____ 20 __

REVIEWED BY : DATE : _____ 20 __

REVIEWED BY : DATE : _____ 20 __

CITY CLIENT

NO.	DATE	BY	DESCRIPTION

REVISIONS

ISSUE
65% CONSTRUCTION DOCUMENTS / BID SET

DATE
01/23/2012

DRAWING NO. **6693**

SHEET OF SHEETS

SHEET TITLE
SECTIONS AND ELEVATIONS

SHEET NO.
AV2.51

SHEET OF

DWG. NO. :

TITLE OF PROJECT :

SPEAKERS

CEILING SPEAKER | CEILING SPEAKER W/TRANSFORMER | MONITOR SPEAKER | HORN

MID & LOW SPEAKER | 2 WAY SPEAKER | 3 WAY SPEAKER | HORN W/TRANSFORMER

SINGLE SUB WOOFER | DUAL SUB WOOFER | QUAD SUBWOOFER | SELF POWERED SPEAKER

3-WAY POWERED SPEAKER | 3-WAY SPEAKER?? | IN-WALL SPEAKER | PLASMA SPEAKER

POWERED LINE ARRAY SPEAKER | LINE ARRAY SPEAKER | UNDERWATER SPEAKER | PLANTER SPEAKER

AMPLIFIERS

SINGLE CHANNEL | DUAL CHANNEL | 3 CHANNEL | 4 CHANNEL

BRIDGE | TOP HALF | MIDDLE HALF | BOTTOM HALF

VIDEO

VIDEO PROJECTOR | PAN AND TILT CAMERA | VIDEO CAMERA

TELEVISION | VIDEO MONITOR | VIDEO DISPLAY | PROJECTION SCREEN

SATELLITE | DOCUMENT CAMERA

DEVICES

DEVICE | TOP HALF | BOTTOM HALF

JUNCTION BOXES

J-BOX

MISCELLANEOUS SYMBOLS

COMPUTER | KEYBOARD | MOUSE | WIRELESS MOUSE

LAPTOP PC | WIRELESS TOUCH PANEL | TOUCH PANEL | DOCK ABLE TOUCH PANEL

TABLE TOP MICROPHONE | HAND HELD MICROPHONE | WIRELESS HAND HELD MICROPHONE | LAVALIERE MICROPHONE

CEILING MICROPHONE | GOOSENECK MICROPHONE | PAGING MICRHOPHONE | BELT PACK

HEADSET BELTPACK | HEADSET PLUGIN | ANTENNA | INFRA RED EMITTER

ATTENUATOR | TRANSFORMER | 10K POT | LIGHTING PROTECTION

SYMBOL KEY — SCALE: NTS — 1

LINE CONVENTIONS

AUDIO LINE
CONTROL LINE
VIDEO LINE
RACK
INTERCOM
MULTI
SPEAKER
RF
AREA
WIRE BUSS
'Y' CONNECTION

DRAWING AND SIGNAL NAVIGATION

TO DEVICE — PAGE TO ID NUMBER — PAGE TO
PAGE FROM ID NUMBER — FROM DEVICE — PAGE FROM
FROM EXTERNAL SYSTEM
TO EXTERNAL SYSTEM

AUDIO PATCH POINTS

HALF NORMAL BRIDGING
HALF NORMAL
FULL NORMAL
IN
OUT

I/O CONNECTIONS

SCREW TERMINAL
TERMINAL — DEVICE INPUT
TERMINAL — DEVICE OUTPUT
CONNECTOR/CONNECTION POINT

WIRING KEY — SCALE: NTS — 2

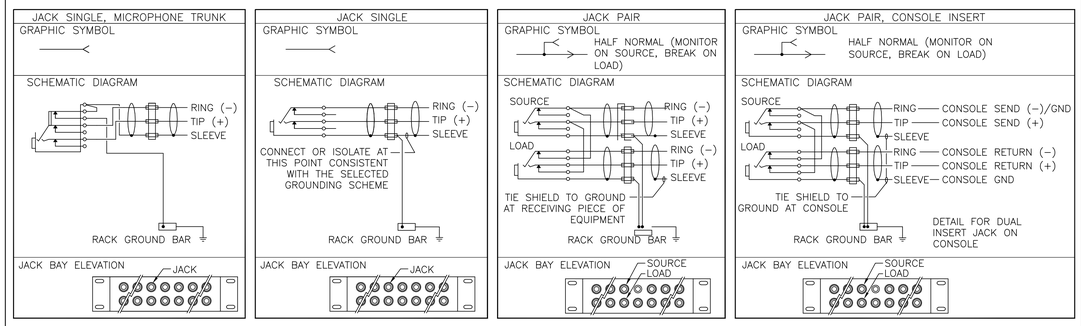

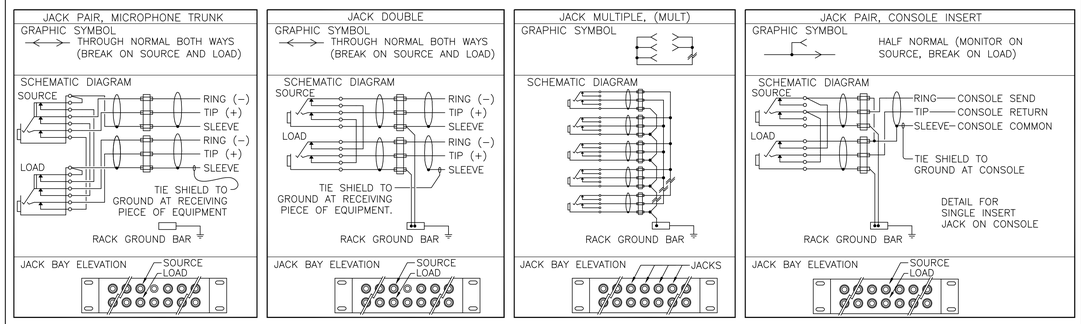

GROUNDING DIAGRAM SCHEMES — SCALE: — 3

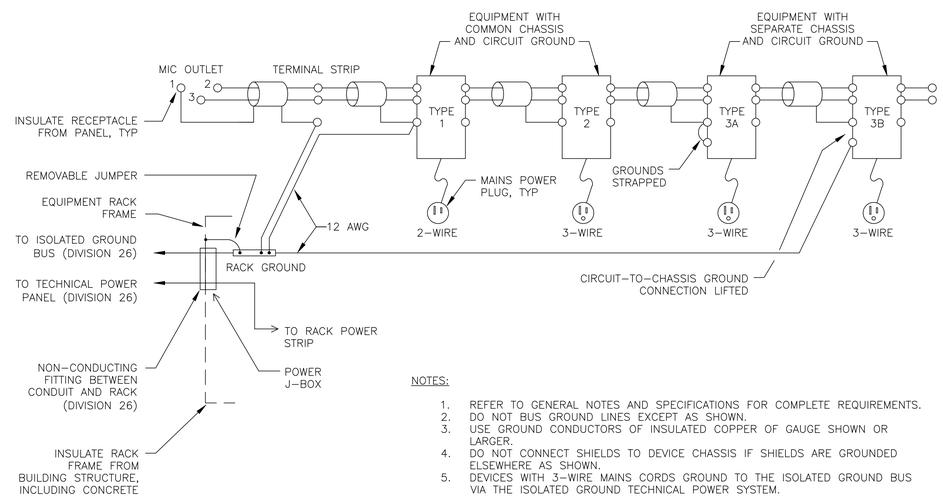

NOTES:

1. REFER TO GENERAL NOTES AND SPECIFICATIONS FOR COMPLETE REQUIREMENTS.
2. DO NOT BUS GROUND LINES EXCEPT AS SHOWN.
3. USE GROUND CONDUCTORS OF INSULATED COPPER OF GAUGE SHOWN OR LARGER.
4. DO NOT CONNECT SHIELDS TO DEVICE CHASSIS IF SHIELDS ARE GROUNDED ELSEWHERE AS SHOWN.
5. DEVICES WITH 3-WIRE MAINS CORDS GROUND TO THE ISOLATED GROUND BUS VIA THE ISOLATED GROUND TECHNICAL POWER SYSTEM.

GROUNDING DETAIL — SCALE: NTS — 4

PICO BRANCH LIBRARY

2201 Pico Blvd.
Santa Monica, CA 90404

PROJECT

KoningEizenberg Architecture
1454 25th St, Santa Monica, CA 90404
310.828.6131 info@kearch.com
310.828.0719 fax www.kearch.com

ARCHITECT'S PROJECT NO. **1001**

ARCHITECT

All designs, ideas, arrangements and plans indicated by these drawings are the property and copyright of the Architect and shall neither be used on any other work nor be disclosed to any other person for any use whatsoever without written permission.

Koning Eizenberg Architecture and/or its principals and employees waives any and all liability or responsibility for problems that may occur when these plans, drawings, specifications, and/or designs are followed without the professional's guidance with ambiguities, or conflicts which are alleged.

Veneklasen Associates
Consultants in Acoustics | AV | IT | Environmental Noise
1711 Sixteenth Street
Santa Monica, CA 90404
(310) 450-1703
www.veneklasen.com

CONSULTANT

City of Santa Monica
Architecture Services
1437 4TH STREET, SUITE 300
SANTA MONICA, CA 90401
TEL. (310) 458-2205
FAX. (310) 399-1541
architecture@smgov.net

SUBMITTED BY : DATE : 20

APPROVED BY : Miriam Mulder, Architecture Services Manager — DATE : 20

CITY OF SANTA MONICA
DEPARTMENT OF PUBLIC WORKS

REVIEWED BY : DATE : 20

REVIEWED BY : DATE : 20

REVIEWED BY : DATE : 20

CITY CLIENT

NO.	DATE	BY	DESCRIPTION

REVISIONS

ISSUE
65% CONSTRUCTION DOCUMENTS / BID SET

DATE
01/23/2012

DRAWING NO. **6693**

SHEET OF SHEETS

SHEET TITLE
WIRING SCHEME AND SYMBOL KEY

SHEET NO.
AV3.00

SHEET OF

DWG. NO. -

TITLE OF PROJECT

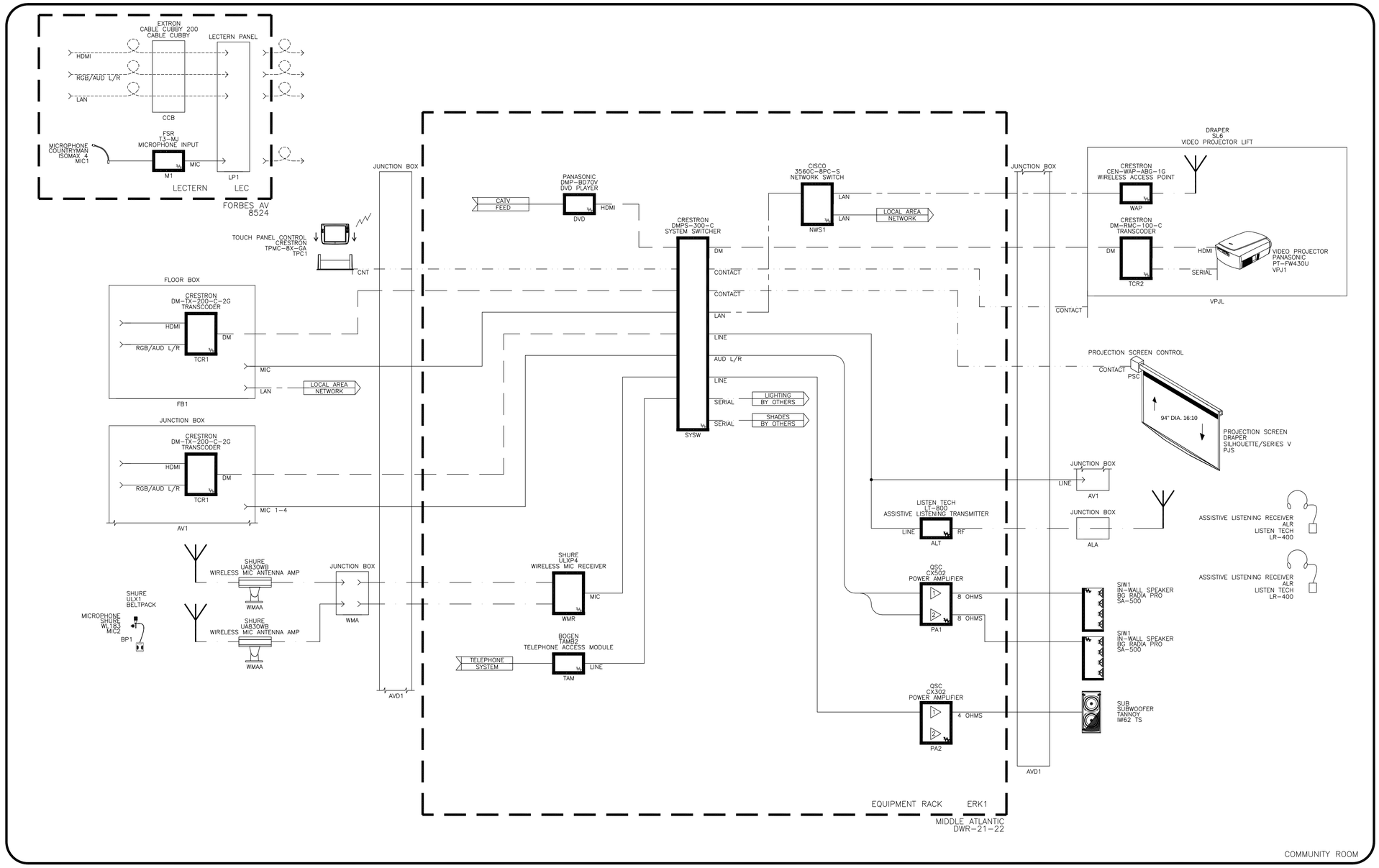

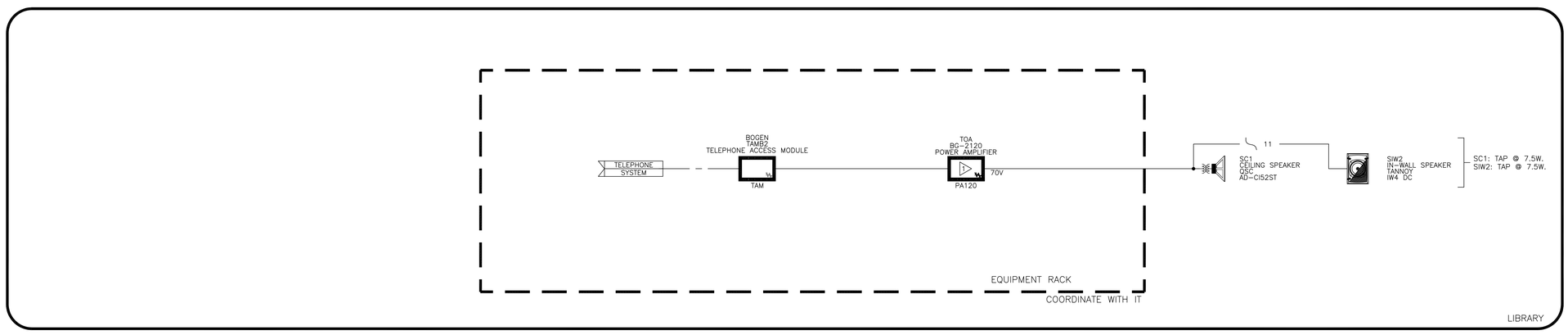

PICO BRANCH LIBRARY

2201 Pico Blvd.
Santa Monica, CA 90404

PROJECT

KoningEizenberg Architecture
1454 25th St, Santa Monica, CA 90404

310.828.6131 info@kearch.com
310.828.0719 fax www.kearch.com

ARCHITECT'S PROJECT NO.
1001

ARCHITECT

All designs, ideas, arrangements and plans indicated by these drawings are the property and copyright of the Architect and shall neither be used on any other work nor be disclosed to any other person for any use whatsoever without written permission.

Koning Eizenberg Architecture and/or its principals and employees waives any and all liability or responsibility for problems that may occur when these plans, drawings, specifications, and/or designs are followed without the professional's guidance with ambiguities, or conflicts which are alleged.

Veneklasen Associates
Consultants In Acoustics | AV | IT | Environmental Noise
1711 Sixteenth Street
Santa Monica, CA 90404
(310) 450-1733
www.veneklasen.com

CONSULTANT

City of Santa Monica
Architecture Services

1437 4TH STREET, SUITE 300
SANTA MONICA, CA 90401
TEL. (310) 458-2205
FAX. (310) 399-1541
architecture@smgov.net

SUBMITTED BY : _____ DATE : _____ 20 __

APPROVED BY : _____ DATE : _____ 20 __
Miriam Mulder,
Architecture Services Manager

CITY OF SANTA MONICA
DEPARTMENT OF PUBLIC WORKS

REVIEWED BY : _____ DATE : _____ 20 __

REVIEWED BY : _____ DATE : _____ 20 __

REVIEWED BY : _____ DATE : _____ 20 __

CITY CLIENT

NO.	DATE	BY	DESCRIPTION

REVISIONS

ISSUE
65% CONSTRUCTION DOCUMENTS / BID SET

DATE
01/23/2012

DRAWING NO. **6693**

SHEET OF SHEETS

SHEET TITLE
SCHEMATIC DIAGRAM

SHEET NO.
AV3.01

SHEET OF

DWG. NO. -

TITLE OF PROJECT :

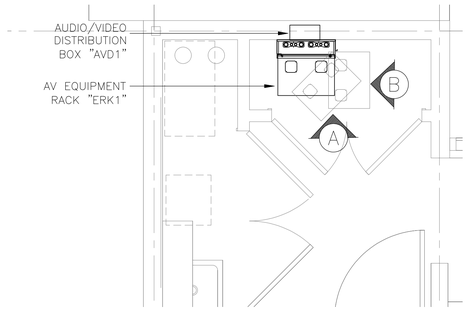

EQUIPMENT ROOM LAYOUT - PLAN | SCALE: 1/2" = 1'-0\ | 1

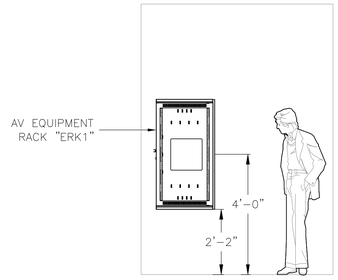

EQUIPMENT ROOM - ELEVATION | SCALE: 1/2" = 1'-0\ | A

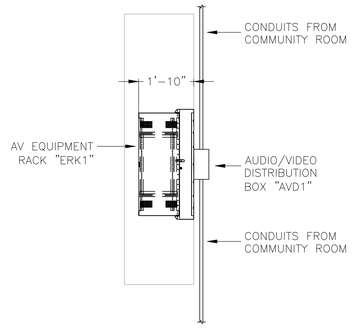

EQUIPMENT ROOM - ELEVATION | SCALE: 1/2" = 1'-0" | B

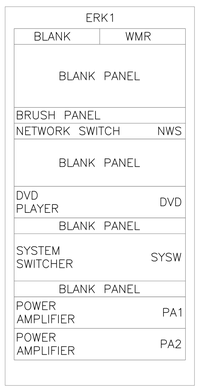

EQUIPMENT RACK "ERK1" ELEVATION | SCALE: NTS | 2

PICO BRANCH LIBRARY

2201 Pico Blvd.
Santa Monica, CA 90404

PROJECT

KoningEizenberg Architecture
1454 25th St, Santa Monica, CA 90404

310.828.6131 info@kearch.com
310.828.0719 fax www.kearch.com

ARCHITECT'S PROJECT NO.
1001

ARCHITECT

All designs, ideas, arrangements and plans indicated by these drawings are the property and copyright of the Architect and shall neither be used on any other work nor be disclosed to any other person for any use whatsoever without written permission.

Koning Eizenberg Architecture and/or its principals and employees waives any and all liability or responsibility for problems that may occur when these plans, drawings, specifications, and/or designs are followed without the professional's guidance with ambiguities, or conflicts which are alleged.

Veneklasen Associates
Consultants in Acoustics | AV | IT | Environmental Noise
1711 Sixteenth Street
Santa Monica, CA 90404
(310) 450-1733
www.veneklasen.com

CONSULTANT

City of
Santa Monica
Architecture Services

1437 4TH STREET, SUITE 300
SANTA MONICA, CA 90401
TEL. (310) 458-2205
FAX. (310) 399-1541
architecture@smgov.net

_____ DATE : _____ 20 __
SUBMITTED BY :

_____ DATE : _____ 20 __
APPROVED BY :
Miriam Mulder,
Architecture Services Manager

CITY OF SANTA MONICA
DEPARTMENT OF PUBLIC WORKS

REVIEWED BY : DATE : _____ 20 __

REVIEWED BY : DATE : _____ 20 __

REVIEWED BY : DATE : _____ 20 __

CITY CLIENT

NO.	DATE	BY	DESCRIPTION

REVISIONS

ISSUE
65% CONSTRUCTION DOCUMENTS / BID SET

DATE
01/23/2012

DRAWING NO. **6693**

SHEET OF SHEETS

SHEET TITLE
TYPICAL EQUIPMENT ROOM LAYOUT

SHEET NO.
AV4.51

SHEET OF

DWG. NO. : -

TITLE OF PROJECT :

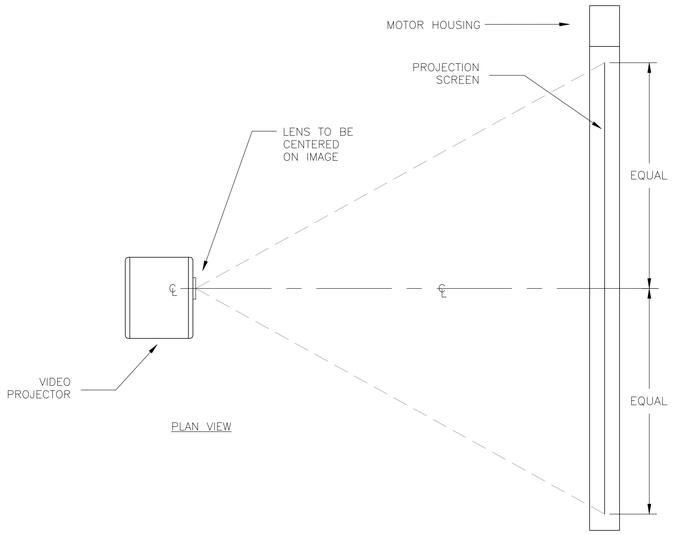

PLAN VIEW

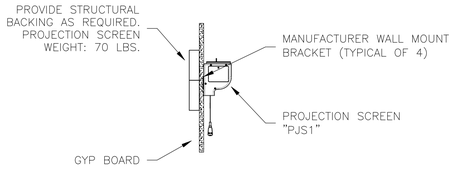

NOTE:
REFER TO STRUCTURAL DRAWINGS FOR LOADING LIMITATIONS TO STRUCTURE, GENERIC DETAILS, AND ANCHOR REQUIREMENTS. ALSO, REFER TO STRUCTURAL DRAWINGS FOR MINIMUM SEISMIC REQUIREMENTS FOR CONFORMANCE WITH THE CODE, TYP.

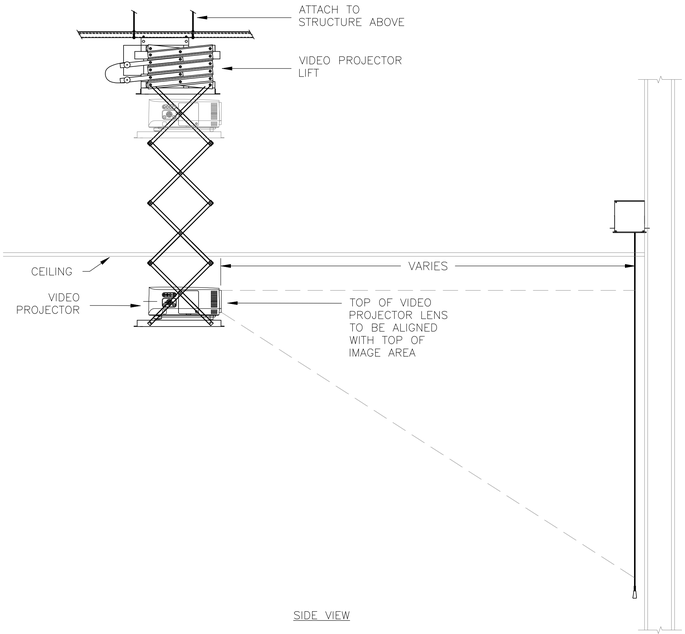

SIDE VIEW

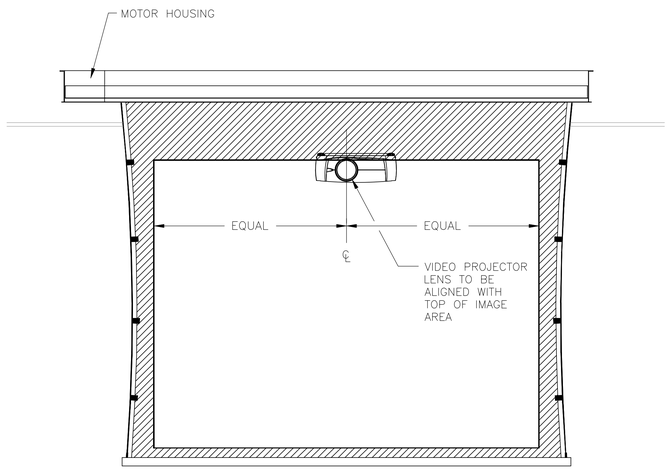

FRONT VIEW

TYPICAL PROJECTION SCREEN AND VIDEO PROJECTOR DETAIL | SCALE: NTS | 1

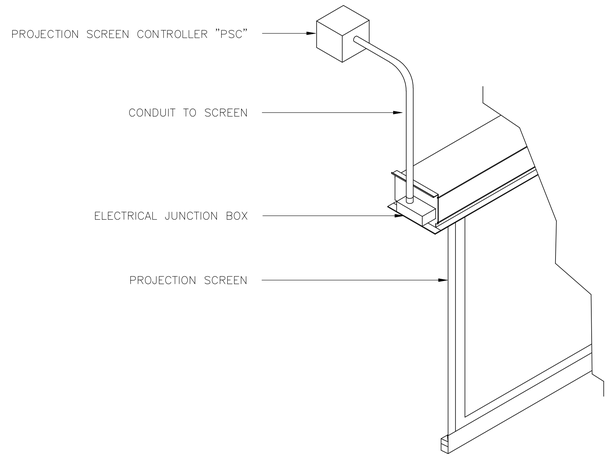

TYPICAL PROJECTION SCREEN DETAIL | SCALE: NTS | 2

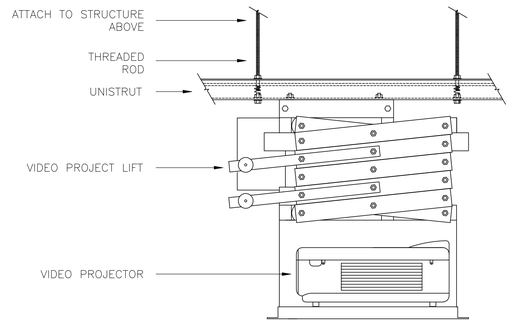

SIDE VIEW

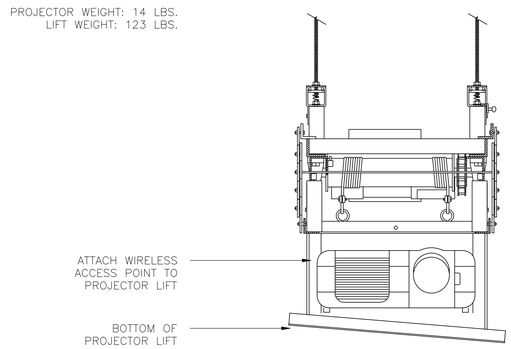

FRONT VIEW

TYPICAL VIDEO PROJECTOR LIFT DETAIL | SCALE: NTS | 3

PICO BRANCH LIBRARY

2201 Pico Blvd.
Santa Monica, CA 90404

PROJECT

KoningEizenberg Architecture
1454 25th St, Santa Monica, CA 90404

310.828.6131 info@kearch.com
310.828.0719 fax www.kearch.com

ARCHITECT'S PROJECT NO.
1001

ARCHITECT

All designs, ideas, arrangements and plans indicated by these drawings are the property and copyright of the Architect and shall neither be used on any other work nor be disclosed to any other person for any use whatsoever without written permission.

Koning Eizenberg Architecture and/or its principals and employees waives any and all liability or responsibility for problems that may occur when these plans, drawings, specifications, and/or designs are followed without the professional's guidance with ambiguities, or conflicts which are alleged.

Veneklasen Associates
Consultants in Acoustics | AV | IT | Environmental Noise
1711 Sixteenth Street
Santa Monica, CA 90404
(310) 450-1733
www.veneklasen.com

CONSULTANT

City of Santa Monica
Architecture Services

1437 4TH STREET, SUITE 300
SANTA MONICA, CA 90401
TEL. (310) 458-2205
FAX. (310) 399-1541
architecture@smgov.net

SUBMITTED BY : DATE : 20

APPROVED BY : DATE : 20
Miriam Mulder,
Architecture Services Manager

CITY OF SANTA MONICA
DEPARTMENT OF PUBLIC WORKS

REVIEWED BY : DATE : 20

REVIEWED BY : DATE : 20

REVIEWED BY : DATE : 20

CITY CLIENT

NO.	DATE	BY	DESCRIPTION

REVISIONS

ISSUE
65% CONSTRUCTION DOCUMENTS / BID SET

DATE
01/23/2012

DRAWING NO. **6693**

SHEET OF SHEETS

SHEET TITLE
AV DETAILS

SHEET NO.
AV6.01

SHEET OF

DWG. NO. -

TITLE OF PROJECT :

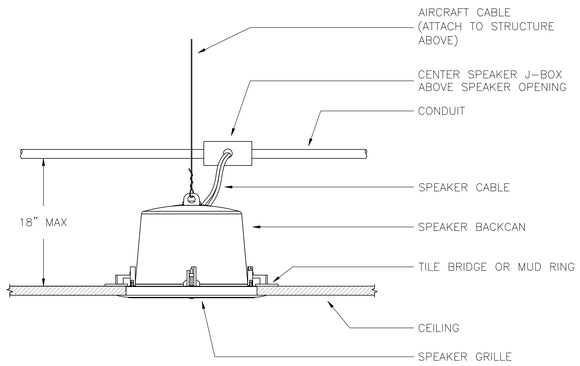

NOTE:
-SPEAKER & SPEAKER GRILLE BY AV CONTRACTOR
-CONDUIT BY E.C.

TYPICAL CEILING SPEAKER DETAIL | SCALE: NTS | 1

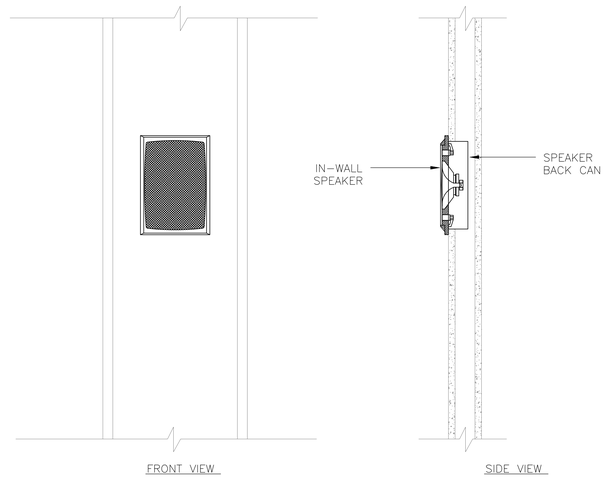

TYPICAL IN-WALL SPEAKER DETAIL | SCALE: NTS | 2

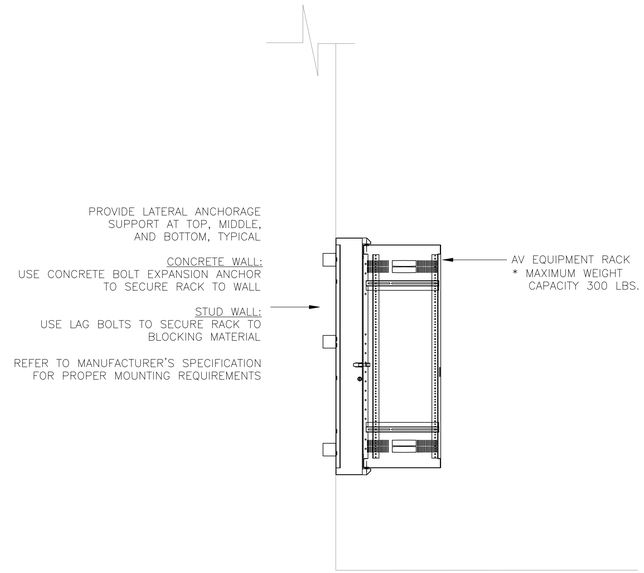

NOTE:

THESE PLANS ARE CONCEPTUAL ONLY. THEY MUST BE FULLY ENGINEERED BY A LICENSED STRUCTURAL ENGINEER.

TYPICAL WALL MOUNTED EQUIPMENT RACK DETAIL | SCALE: NTS | 3

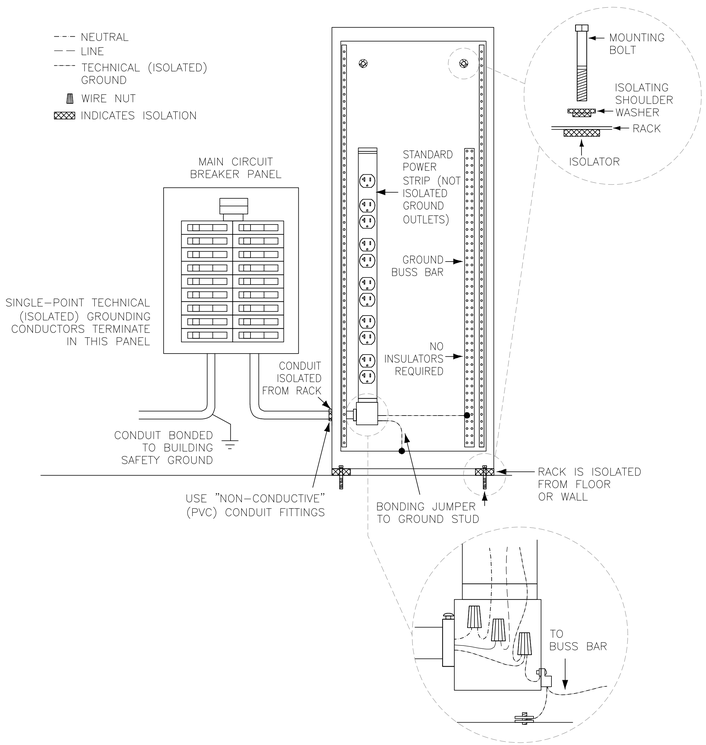

TYPICAL GROUNDING DETAIL | SCALE: NTS | 4

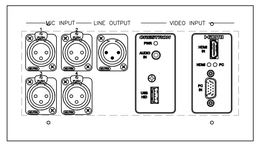

"AV1" PANEL LAYOUT | SCALE: 6"=1' | 5

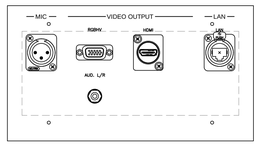

LECTERN PANEL "LP1" PANEL LAYOUT | SCALE: 6"=1' | 7

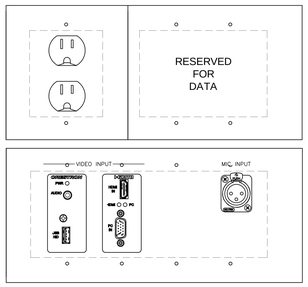

FLOOR BOX "FB1" PANEL LAYOUT | SCALE: 6"=1' | 6

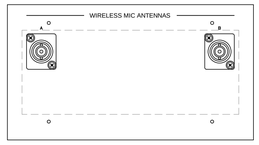

WIRELESS MIC ANTENNA "WMA" PANEL LAYOUT | SCALE: 6"=1' | 8

PICO BRANCH LIBRARY

2201 Pico Blvd.
Santa Monica, CA 90404

PROJECT

KoningEizenberg Architecture
1454 25th St, Santa Monica, CA 90404

310.828.6131 info@kearch.com
310.828.0719 fax www.kearch.com

ARCHITECT'S PROJECT NO.
1001

ARCHITECT

All designs, ideas, arrangements and plans indicated by these drawings are the property and copyright of the Architect and shall neither be used on any other work nor be disclosed to any other person for any use whatsoever without written permission.

Koning Eizenberg Architecture and/or its principals and employees waives any and all liability or responsibility for problems that may occur when these plans, drawings, specifications, and/or designs are followed without the professional's guidance with ambiguities, or conflicts which are alleged.

Veneklasen Associates
Consultants In Acoustics | AV | IT | Environmental Noise
1711 Sixteenth Street
Santa Monica, CA 90404
(310) 450-1733
www.veneklasen.com

CONSULTANT

City of Santa Monica
Architecture Services

1437 4TH STREET, SUITE 300
SANTA MONICA, CA 90401
TEL. (310) 458-2205
FAX. (310) 399-1541
architecture@smgov.net

DATE : _____ 20 __
SUBMITTED BY :

DATE : _____ 20 __
APPROVED BY :
Miriam Mulder,
Architecture Services Manager

CITY OF SANTA MONICA
DEPARTMENT OF PUBLIC WORKS

REVIEWED BY : DATE : _____ 20 __

REVIEWED BY : DATE : _____ 20 __

REVIEWED BY : DATE : _____ 20 __

CITY CLIENT

NO.	DATE	BY	DESCRIPTION

REVISIONS

ISSUE
65% CONSTRUCTION DOCUMENTS / BID SET

DATE
01/23/2012

DRAWING NO. **6693**

SHEET ____ OF ____ SHEETS

SHEET TITLE
AV DETAILS

SHEET NO.
AV6.02

SHEET OF

DWG. NO. -

TITLE OF PROJECT:

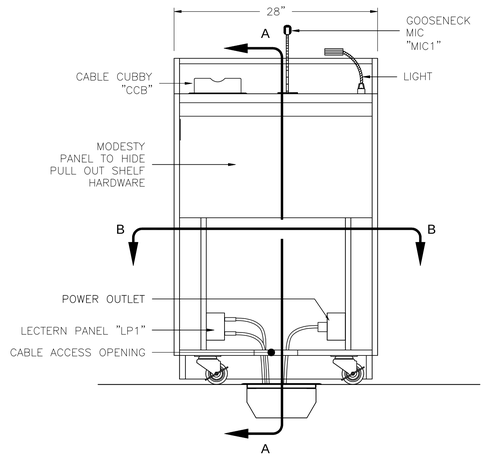

FRONT ELEVATION

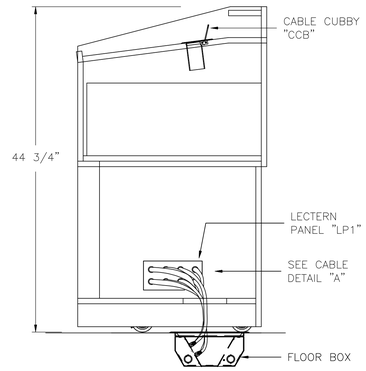

A–A SECTION

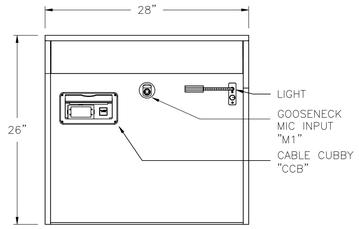

PLAN VIEW

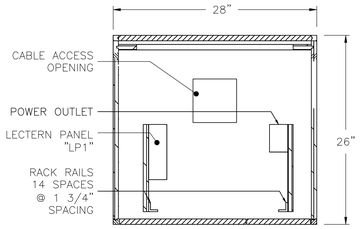

B–B SECTION VIEW

TYPICAL LECTERN DETAIL | SCALE: NTS | 1

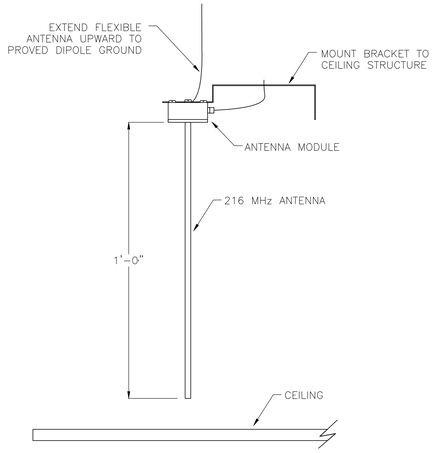

TYPICAL ASSISTIVE LISTENING ANTENNA MOUNTING DETAIL | SCALE: NTS | 2

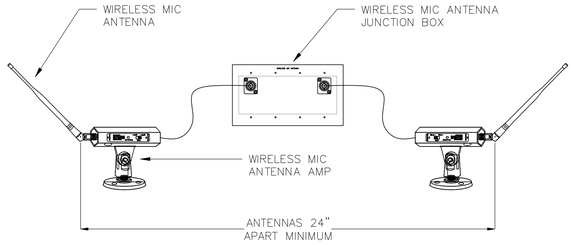

TYPICAL WIRELESS MIC ANTENNA MOUNTING DETAIL | SCALE: NTS | 3

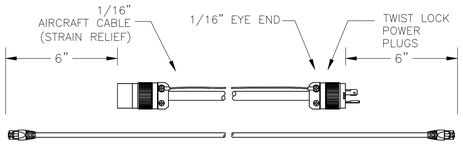

NOTE:
LOW VOLTAGE CABLE TO BE 12" LONGER THAN POWER CABLE.

TYPICAL LECTERN CABLE DETAIL | SCALE: NTS | A

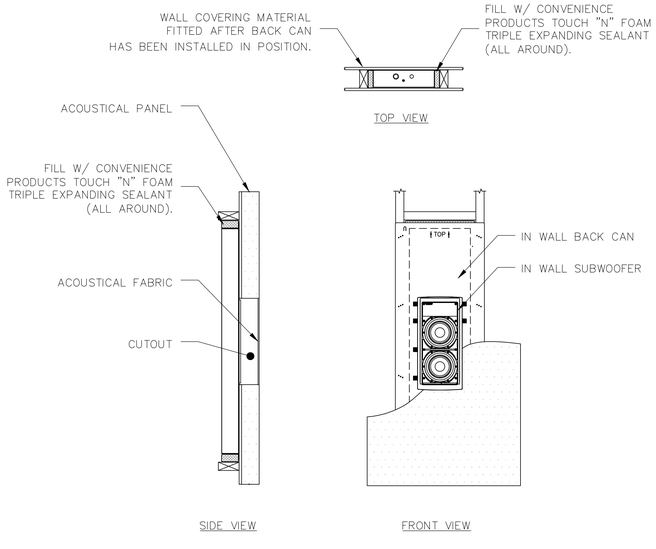

TYPICAL IN-WALL SUBWOOFER DETAIL | SCALE: NTS | 4

PICO BRANCH LIBRARY

2201 Pico Blvd.
Santa Monica, CA 90404

PROJECT

KoningEizenberg Architecture
1454 25th St, Santa Monica, CA 90404
310.828.6131 info@kearch.com
310.828.0719 fax www.kearch.com

ARCHITECT'S PROJECT NO.
1001

ARCHITECT

All designs, ideas, arrangements and plans indicated by these drawings are the property and copyright of the Architect and shall neither be used on any other work nor be disclosed to any other person for any use whatsoever without written permission.

Koning Eizenberg Architecture and/or its principals and employees waives any and all liability or responsibility for problems that may occur when these plans, drawings, specifications, and/or designs are followed without the professional's guidance with ambiguities, or conflicts which are alleged.

Veneklasen Associates
Consultants in Acoustics | AV | IT | Environmental Noise
1711 Sixteenth Street
Santa Monica, CA 90404
(310) 450-1733
www.veneklasen.com

CONSULTANT

City of Santa Monica
Architecture Services
1437 4TH STREET, SUITE 300
SANTA MONICA, CA 90401
TEL. (310) 458-2205
FAX. (310) 399-1541
architecture@smgov.net

SUBMITTED BY : DATE : 20

APPROVED BY : DATE : 20
Miriam Mulder,
Architecture Services Manager

CITY OF SANTA MONICA
DEPARTMENT OF PUBLIC WORKS

REVIEWED BY : DATE : 20

REVIEWED BY : DATE : 20

REVIEWED BY : DATE : 20

CITY CLIENT

NO.	DATE	BY	DESCRIPTION

REVISIONS

ISSUE
65% CONSTRUCTION DOCUMENTS / BID SET

DATE
01/23/2012

DRAWING NO. **6693**

SHEET OF SHEETS

SHEET TITLE
AV DETAILS

SHEET NO.
AV6.03

SHEET OF

DWG. NO. :

TITLE OF PROJECT :

PICO BRANCH LIBRARY

SANTA MONICA, CA

GENERAL NOTES

REFER TO SPECIFICATIONS FOR COMPLETE REQUIREMENTS.

1. ELECTRICAL

   A. ALL CONDUITS, JUNCTION BOXES, BACK BOXES, PULL STRING AND POWER OUTLETS BY DIVISION 26 CONTRACTOR AS REQUIRED.

2. COORDINATE

   A. COORDINATE WITH THE WORK OF ALL SECTIONS. COORDINATE THE LOCATION OF BLOCKING AND BACKING REQUIRED BY THIS SECTION. MAKE REASONABLE MINOR ADJUSTMENTS TO PRESERVE ARCHITECTURAL SYMMETRY AND ALIGNMENT WITH ADJACENT FEATURES AT NO CLAIM FOR ADDITIONAL COST OR TIME. PRESENT CONFLICTS IN TIMELY MANNER FOR RESOLUTION.
   B. RELOCATION, REVISION OR CORRECTION CAUSED BY FAILURE OF THE CONTRACTOR TO COORDINATE THE WORK SHALL NOT BE SUBJECT TO CLAIM FOR ADDITIONAL COST OR TIME.
   C. POWER RECEPTACLES SHOWN ON THE IT DRAWINGS OUTSIDE OF EQUIPMENT RACKS ARE SHOWN FOR COORDINATION INFORMATION ONLY. REFER TO DIVISION 26 DOCUMENTS FOR CONSTRUCTION.
   D. THESE DRAWINGS SHOW SCOPE. THE EXACT LOCATION & ELEVATIONS OF WORK AREA OUTLETS, FLOOR MONUMENTS, AND DEVICES MUST BE COORDINATED WITH THE ARCHITECTURAL DRAWINGS.
   E. CONDUIT, BACK BOXES AND PULL BOXES SUPPLIED AND INSTALLED BY ELECTRICAL CONTRACTOR UNDER SUPERVISION OF IT CONTRACTOR.
   F. GENERAL CONTRACTOR SHALL COORDINATE THE CONDUIT, DEVICES, PATHWAYS AND JUNCTION BOXES FOR THE IT SYSTEM WITH OTHER TRADE TO AVOID ANY CONFLICTS.

3. LOCATIONS AND DIMENSIONS

   A. LOCATIONS AND DIMENSIONS SHOWN ON ARCHITECTURAL DRAWINGS TAKE PRECEDENCE OVER THESE AB DRAWINGS. IN CASE OF APPARENT CONFLICT OR AMBIGUITY, SUBMIT TO THE ARCHITECT IN TIMELY MANNER FOR RESOLUTION.
   B. DIMENSIONS TAKE PRECEDENCE OVER SCALE. LARGE SCALE DRAWINGS TAKE PRECEDENCE OVER SMALL. REPORT ALL CONFLICTS BEFORE INSTALLATION.
   C. UNLESS OTHERWISE NOTED, DIMENSIONS ARE SHOWN HEIGHT X WIDTH X DEPTH.
   D. VERIFY ALL DIMENSIONS, LOCATIONS AND CONDITIONS IN THE FIELD PRIOR TO STARTING WORK. NOTIFY ARCHITECT OF ANY APPARENT DISCREPANCIES.

4. SUPPORT

   PROVIDE ALL BLOCKING, BRIDGING, TIES, FASTENERS AND RELATED SUPPORT PROVISIONS FOR ALL WORK OF THIS SECTION. COMPLY WITH APPLICABLE CODE REQUIREMENTS FOR MEANS OF SUPPORT OF ELECTRICAL EQUIPMENT OF THE SAME WEIGHT UNDER THE SAME MOUNTING CONDITIONS. DO NOT APPLY ANY LOAD TO BUILDING STRUCTURE WITHOUT FIRST OBTAINING WRITTEN APPROVAL OF THE PROJECT STRUCTURAL ENGINEER. OBTAIN PER PROJECT PROCEDURES.

5. BOX, PANEL AND ENCLOSURE INSTALLATION

   A. COORDINATE THE LOCATION OF ALL BOXES, PANELS, ENCLOSURES AND RELATED RACEWAY WITH THE WORK OF OTHER SECTIONS.
   B. VERIFY ACCESS TO BOXES, PANELS AND ENCLOSURES COMPLY WITH APPLICABLE CODE.
   C. INSTALL BOXES, PANELS AND ENCLOSURES SQUARE AND PLUMB. SET FLUSH MOUNTED UNITS SO THAT THE FACE OF THE COVER, BEZEL OR ESCUTCHEON, IS IN THE SAME PLANE AS THE SURROUNDING FINISHED SURFACE. MOUNT BOXES, PANELS AND TRIM SO THAT THERE ARE NO GAPS, CRACKS OR OBVIOUS LINES BETWEEN THE TRIM AND THE ADJACENT FINISHED SURFACE. THIS APPLIES TO ALL HORIZONTAL AND VERTICAL SURFACES.
   E. UNLESS OTHERWISE NEED, PROVIDE STEEL BOXES, PANELS AND ENCLOSURES. COMPLY WITH DIVISION 26 REQUIREMENTS AND APPLICABLE CODE.
   F. UNLESS OTHERWISE NOTED, BOXES AND ENCLOSURES SHALL BE NOT LESS THAN 2-1/8 INCHES DEEP. PROVIDE THE LARGER OF THE SIZE REQUIRED BY APPLICABLE CODE OR AS SHOWN ON DRAWINGS. COORDINATE WIRE AND CABLE BEND RADIUS WITH BOX AND ENCLOSURE SIZE.
   G. PULL BOXES: PROVIDE AS REQUIRED BY THE MOST RESTRICTIVE OF APPLICABLE CODE OR THE PROVISIONS OF DIVISION 16. COORDINATE WITH WIRE AND CABLE BEND RADIUS.

6. RACEWAY

   A. RACEWAY FOR ALL WORK IN THIS SECTION SHALL BE EMT.
   B. RACEWAY SHALL BE 1" DIAMETER TRADE SIZE UNLESS OTHERWISE NOTED.
   C. CONDUIT WITH FIBER OPTIC CABLE INSTALLED, MUST CONFORM TO THE MINIMUM BEND RADIUS AS SPECIFIED BY THE MANUFACTURER OF THE CABLE. DIVISION 26 CONTRACTOR IS TO APPLY RADIUS BENDS WHERE NEEDED. FIBER BEND RADIUS SHALL BE A MINIMUM LONG-TERM LOW-STRESS RADIUS NOT LESS THAN 20 TIMES THE CABLE DIAMETER.
   D. KEEP A MINIMUM OF 12" CLEAR BETWEEN ELECTRICAL CONDUIT AND LOW VOLTAGE CONDUIT.

7. GROUNDING AND BONDING

   COMPLY WITH ALL APPLICABLE CODES AND ORDINANCES. REFER TO NATIONAL ELECTRICAL CODE SECTION 250 AND 2007 CALIFORNIA ELECTRICAL CODE.

   A. BOND RACEWAY AND RELATED BOXES, PANELS, ENCLOSURES AND CABINETS AS REQUIRED BY APPLICABLE CODE AND DIVISION 26.
   B. MAKE RACEWAY CONNECTIONS TO EQUIPMENT RACKS AND SIMILAR EQUIPMENT ENCLOSURES CONTAINING POWERED EQUIPMENT WITH ISOLATED FITTINGS.
   C. GROUND AND BOND EQUIPMENT RACKS AND SIMILAR EQUIPMENT ENCLOSURES CONTAINING POWERED EQUIPMENT EXCLUSIVELY VIA THE ISOLATED EQUIPMENT GROUNDING CONDUCTORS PROVIDED UNDER DIVISION 16. SIZE SUCH CONDUCTORS ACCORDING TO APPLICABLE CODE.
   D. D.C. RESISTANCE BETWEEN THE ISOLATED EQUIPMENT GROUNDING BUS AT EQUIPMENT ROOM TECHNICAL POWER PANELS AND THE MAIN PROJECT GROUND FIELD SHALL NOT EXCEED 0.15 OHMS.
   E. FOR COMMUNITY ANTENNA TELEVISION AND MASTER ANTENNA TELEVISION SYSTEMS AND RELATED PROVISIONS, COMPLY WITH ARTICLE 800, NATIONAL ELECTRICAL CODE.

8. CABLE AND WIRE

   A. ALL LOW VOLTAGE CABLE AND WIRE BY DATA CABLE INSTALLATION CONTRACTOR.
   B. USE PLENUM RATED WIRE WHERE REQUIRED BY CODE.
   C. ALL WIRE DISTRIBUTION TO EQUIPMENT RACK TO BE PLENUM RATED AS NEEDED.

9. GENERAL

   A. IN THE EVENT THAT THESE PLANS, NOTES OR DETAILS OR ANY PART OR PORTION THEREOF ARE USED BY ANY THIRD-PARTY WITHOUT THE EXPRESS AUTHORIZED PERMISSION OF VENEKLASEN ASSOCIATES, THE UNAUTHORIZED USER AND ANYONE BENEFITING THEREFROM, SHALL DEFEND, INDEMNIFY AND HOLD HARMLESS VENEKLASEN ASSOCIATES AND ITS AGENTS, PRINCIPALS, EMPLOYEES AND CONSULTANTS FROM AND AGAINST ANY AND ALL CLAIMS, INCLUDING ATTORNEYS' FEES ARISING OUT OF SAID UNAUTHORIZED USE.
   B. FURTHERMORE, THE UNAUTHORIZED USE OF THESE PLANS, NOTES, DETAILS OR ANY PART OR PORTION THEREFORE IS EXPRESSLY PROHIBITED AND VENEKLASEN ASSOCIATES RETAINS A COPYRIGHT OVER ANY AND ALL DOCUMENTS PREPARED BY VENEKLASEN ASSOCIATES.
   C. IN THE EVENT THAT THE INSTALLER DEVIATES FROM THE PLANS AND SPECIFICATIONS PREPARED BY VENEKLASEN ASSOCIATES WHICH RESULTS IN DAMAGE TO PERSONS OR PROPERTY OF ANY KIND, INSTALLER HEREBY AGREES TO DEFEND, INDEMNIFY AND HOLD HARMLESS VENEKLASEN ASSOCIATES, ITS AGENTS, PRINCIPALS, EMPLOYEES AND CONSULTANTS FROM AND AGAINST ANY AND ALL CLAIMS, INCLUDING ATTORNEYS' FEES CAUSED BY SUCH FAILURE TO FOLLOW THE PLANS AND SPECIFICATIONS PREPARED BY VENEKLASEN ASSOCIATES, EXCEPTING ONLY THE DAMAGES TO PERSONS OR PROPERTY WHICH ARE CAUSED BY THE SOLE NEGLIGENCE OR WILLFUL MISCONDUCT OF VENEKLASEN ASSOCIATES.
   D. DRAWINGS ARE DIAGRAMMATIC AND ARE INTENDED TO CONVEY SCOPE OF WORK AND TO INDICATE GENERAL ARRANGEMENT. THERE ARE NOT INTENDED TO SHOW EVERY DETAIL INCLUDING OFFSET OR FITTING OR EVERY STRUCTURAL DIFFICULTY THAT MAY BE ENCOUNTERED DURING THE WORK. EXCEPT AS OTHERWISE INDICATED, LOCATIONS OF ITEMS ARE APPROXIMATE ONLY. EXACT LOCATIONS NECESSARY TO SECURE PROPER CONDITIONS AND RESULTS MUST BE DETERMINED AT PROJECT SITE AND MUST BE APPROVED BY THE OWNER'S REPRESENTATIVE.
   E. EXCEPT AS OTHERWISE INDICATED, MAKE REASONABLE MODIFICATIONS IN LAYOUT AS NEEDED TO PREVENT CONFLICT WITH OTHER WORK OR PROPER EXECUTION OF WORK.
   F. INCLUDE WORK NOT USUALLY SHOWN OR SPECIFIED, BUT NECESSARY FOR PROPER INSTALLATION AND OPERATION OF A SYSTEM OR PIECE OF EQUIPMENT IN WORK.

SHEET INDEX

Sheet Index

Sheet Number	Sheet Title	DESIGN DEVELOPMENT 10/25/11	COORDINATION SET 11/28/11	50% CONSTRUCTION DOCUMENTS 12/22/11	65% CONSTRUCTION DOCS / BID SET 01/23/12
T0.01	GENERAL NOTES BOX SCHEDULE AND SHEET INDEX	X	X	X	X
T0.02	ABBREVIATIONS NOTES AND SYMBOLS	X		X	X
T1.01	IT MAIN FLOOR PLAN	X	X	X	X
T2.01	IT REFLECTIVE CEILING PLAN	X	X	X	X
T4.51	IT EQUIPMENT ROOM LAYOUTS	X		X	X
T6.01	IT GROUNDING DETAILS	X		X	X
T6.02	IT DETAILS				X

PICO BRANCH LIBRARY
2201 Pico Blvd.
Santa Monica, CA 90404

PROJECT

KoningEizenbergArchitecture
1454 25th St, Santa Monica, CA 90404
310.828.6131 info@kearch.com
310.828.0719 fax www.kearch.com

ARCHITECT'S PROJECT NO.
1001

ARCHITECT

All designs, ideas, arrangements and plans indicated by these drawings are the property and copyright of the Architect and shall neither be used on any other work nor be disclosed to any other person for any use whatsoever without written permission.

Koning Eizenberg Architecture and/or its principals and employees waives any and all liability or responsibility for problems that may occur when these plans, drawings, specifications, and/or designs are followed without the professional's guidance with ambiguities, or conflicts which are alleged.

Veneklasen Associates
Consultants in Acoustics | AV | IT | Environmental Noise
1711 Sixteenth Street
Santa Monica, CA 90404
(310) 450-1733
www.veneklasen.com

CONSULTANT

City of **Santa Monica**
Architecture Services
1437 4TH STREET, SUITE 300
SANTA MONICA, CA 90401
TEL. (310) 458-2205
FAX. (310) 399-1541
architecture@smgov.net

DATE : _____ 20 __
SUBMITTED BY :

DATE : _____ 20 __
APPROVED BY :
Miriam Mulder,
Architecture Services Manager

CITY OF SANTA MONICA
DEPARTMENT OF PUBLIC WORKS

REVIEWED BY : DATE : _____ 20 __

REVIEWED BY : DATE : _____ 20 __

REVIEWED BY : DATE : _____ 20 __

CITY CLIENT

NO.	DATE	BY	DESCRIPTION

REVISIONS

ISSUE
65% CONSTRUCTION DOCUMENTS / BID SET

DATE
01/23/2012

DRAWING NO. **6693**

SHEET OF SHEETS

SHEET TITLE
GENERAL NOTES AND SHEET INDEX

SHEET NO.
T0.01

SHEET OF

DWG. NO. - -

TITLE OF PROJECT :

ABBREVIATIONS

℄	Center Line
A 0	Above Zero Floor Level
ACT	Above Counter Top
AFB	Above Floor Below
AFC	Above Finished Ceiling
AFF	Above Finished Floor
AH	Above Header
AP	Acces Point (Wireless)
AS	Above Slab
ATR	All Threaded Rod
AV	Audio/Video
AWG	American Wire Gauge
BAF	Below Access Floor
BC	Bonding Conductor
BDF	Building Distribution Frame
BFC	Below Finished Ceiling
BMS	Building Management System
BTU	British Thermal Units
CAB	Cabinet
CATV	Cable TV
CCTV	Closed Circuit Television
CL	Closet
CLG	Ceiling
CM	Construction Manager
CO	Conduit Only
COAX	Coaxial Cable
CT	Cable Tray
CU	Copper
DIA	Diameter
DR	Door
DWR	Drawer
(E)###	Existing
E.C.	Empty Conduit
EBC	Equipment Bonding Conductor
EC	Electrical Contractor
EF	Entrance Facility
EL	Elevation
ELEC	Electrical
EMI	Electromagnetic Interference
EMT	Electrical Metalic Tubing
ENT	Electrical Nonmetalic Tubing
EOL	End Of Line
EQUIP	Equipment
ER	Equipment Room (Main Computer Room)
(F)	Future
FAN	Fan Panel
FBO	Furnished By Others
FCA	Finished Ceiling Above
FIN	Finished
FOC	Fiber Optic Cable
FSF	Folding Shelf
G	Ground
GC	General Contractor
GRC	Galvanized Rigid Conduit
HR	Home Run
I.D	Inside Dimension
IDF	Intermediate Distribution Frame
ISDN	Integrated Services Digital Network
IW	In Wall
JB	Junction Box
LAN	Local Area Network
LP	Lightning Protector
LRR	Lightning Room Rack
LTG	Lighting

MDF	Main Distribution Frame
MISC	Miscellaneous
MM	Multimode (Optical Fiber)
MOM	Momentary
MTD	Mounted
MTL	Metal
NC	Normally Closed
NIC	Not In Contract
NO	Normally Open
NTS	Not To Scale
OC	On Center
OD	Outer Diameter
OF	Optical Fiber
OFCI	Owner Furnished Contractor Installed
OFE	Owner Furnished Equipment
OFOI	Owner Furnished Owner Installed
OSP	Outside Plant
P/O	Part Of
PB	Pull Box
PBX	Private Branch Exchange
PH	Phase
PNL	Panel
POC	Point of Connection
POE	Power Over Ethernet
POS	Point Of Sale
PRO	Protected Terminal
PROJ	Project
PSCH	Project Standard Control Height
PSRH	Project Standard Receptacle Height
PSSH	Project Standard Switch Height
PWR	Power
RCP	Reflected Ceiling Plan
RM	Room
SC	Ceiling Speaker
SECT	Section
SHP	Shielded Pair
SM	Single Mode (Optical Fiber)
STD	Standard
STP	Shielded Twisted Pair
SW	Switch
TBB	Telecommunications Bonding Backbone
TBD	To Be Determined
TC	Telecommunications Closet
TE	Telecommunications Enclosure
TEF	Telecommunications Entrance Facility
TER	Telecommunications Equipment Room (PBX)
TGB	Telecommunications Grounding Busbar
TMGB	Telecommunications Main Grounding Busbar
TR	Telecommunications Room
TST	Test Set
TTB	Telephone Terminal Board
TYP	Typical

UBC	Uniform Building Code
UG	Underground
UON	Unless Otherwise Noted
UPS	Uninterruptible Power Supply
UTP	Unshielded Twisted Pair
V	Volts
VIF	Verify In Field
W	Watts
W/	With
WAP	Wireless Access Point
WP	Weather Proof
WT	Water Tight

COMMUNICATIONS SYMBOLS

- FLOOR OUTLET VOICE
- FLOOR OUTLET DATA
- FLOOR OUTLET VOICE / DATA
- WALL OUTLET VOICE
- WALL OUTLET DATA
- WALL OUTLET VOICE / DATA
- 6 VOICE / DATA FURNITURE FEED
- W WALL TELEPHONE
- CEILING OUTLET VOICE
- CEILING OUTLET DATA
- CEILING OUTLET VOICE / DATA
- AP ACCESS POINT
- C PS CEILING SPEAKER

EQUIPMENT RACK AND CABINET SYMBOLS

- FLOOR STANDING
- SWING OUT
- WALL MOUNTED
- IN–WALL

PATHWAYS AND SPACES SYMBOLS

- —— BC —— BC —— BC —— BACKBONE CONDUIT
- —— OF —— OF —— OF —— OPTICAL FIBER CONDUIT
- —— COP —— COP —— COPPER BACKBONE
- —— COAX —— COAX —— COAXIAL BACKBONE
- — J — J — J — J — J — J–HOOKS
- CABLE TRAY (AFC)
- WIRE MESH TRAY (BAF)
- LADDER RACK
- OPEN WIRE MESH TRAY
- CROSS CONNECT
- SLEEVE
- RISER SLOT
- CONDUIT BANK, SECTION VIEW
- CONDUIT BANK, CONCRETE ENCASED, SECTION VIEW
- PLYWOOD
- ACCESS PANEL
- PLYWOOD

FACILITY SYMBOL DESCRIPTIONS

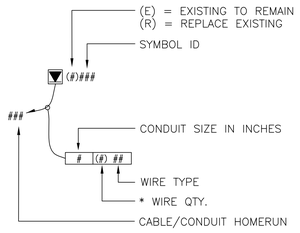

WIRE SCHEDULE

Cable Type	Description	Manufacturer	PART #	Nominal O.D. (In)	Area (Sq. In.)
C	6 STRAND MULTI-MODE 50/125 OPTICAL FIBER	CORNING	Infinicor SX +	0.21	0.05
F	25 PAIR CATEGORY 5E	BELDEN	24577125	0.490	0.189
I	4 PAIR CATEGORY 6 UTP , PLENUM RATED	BELDEN	4813 0091000	0.240	0.070
J	4 PAIR CATEGORY 6 UTP , NON-PLENUM	BELDEN	4812 009A1000	0.245	0.078
K	4 PAIR CATEGORY 6A U/UTP , PLENUM RATED	BELDEN	10GX13 D151000	0.300	0.070
L	4 PAIR CATEGORY 6A U/UTP , NON-PLENUM	BELDEN	10GX12 0091000	0.315	0.078
M	RG-6 COAXIAL CABLE	COMMSCOPE	2229V	0.298	0.070
	RG-11 COAXIAL CABLE	BELDEN	1523A	0.400	0.13
N	1" INNERDUCT	CARLON	DF4X1C	1.31	1.35
O	2" - 3 CELL MULTI-CELL INNERDUCT W/ PULL TAPE	MAXCELL	MXC2003YL250	NA	NA

PICO BRANCH LIBRARY

2201 Pico Blvd.
Santa Monica, CA 90404

PROJECT

KoningEizenbergArchitecture
1454 25th St, Santa Monica, CA 90404

310.828.6131 info@kearch.com
310.828.0719 fax www.kearch.com

ARCHITECT'S PROJECT NO.
1001

ARCHITECT

All designs, ideas, arrangements and plans indicated by these drawings are the property and copyright of the Architect and shall neither be used on any other work nor be disclosed to any other person for any use whatsoever without written permission.

Koning Eizenberg Architecture and/or its principals and employees waives any and all liability or responsibility for problems that may occur when these plans, drawings, specifications, and/or designs are followed without the professional's guidance with ambiguities, or conflicts which are alleged.

Veneklasen Associates
Consultants in Acoustics | AV | IT | Environmental Noise
1711 Sixteenth Street
Santa Monica, CA 90404
(310) 455-1733
www.veneklasen.com

CONSULTANT

City of Santa Monica
Architecture Services

1437 4TH STREET, SUITE 300
SANTA MONICA, CA 90401
TEL. (310) 458-2205
FAX. (310) 399-1541
architecture@smgov.net

DATE : _____ 20 __
SUBMITTED BY :

DATE : _____ 20 __
APPROVED BY :
Miriam Mulder,
Architecture Services Manager

CITY OF SANTA MONICA
DEPARTMENT OF PUBLIC WORKS

REVIEWED BY : DATE : _____ 20 __

REVIEWED BY : DATE : _____ 20 __

REVIEWED BY : DATE : _____ 20 __

CITY CLIENT

NO.	DATE	BY	DESCRIPTION

REVISIONS

ISSUE
65% CONSTRUCTION DOCUMENTS / BID SET

DATE
01/23/2012

DRAWING NO. **6693**

SHEET OF SHEETS

SHEET TITLE
ABBREVIATIONS NOTES AND SYMBOLS

SHEET NO.
T0.02

SHEET OF

DWG. NO. -

TITLE OF PROJECT

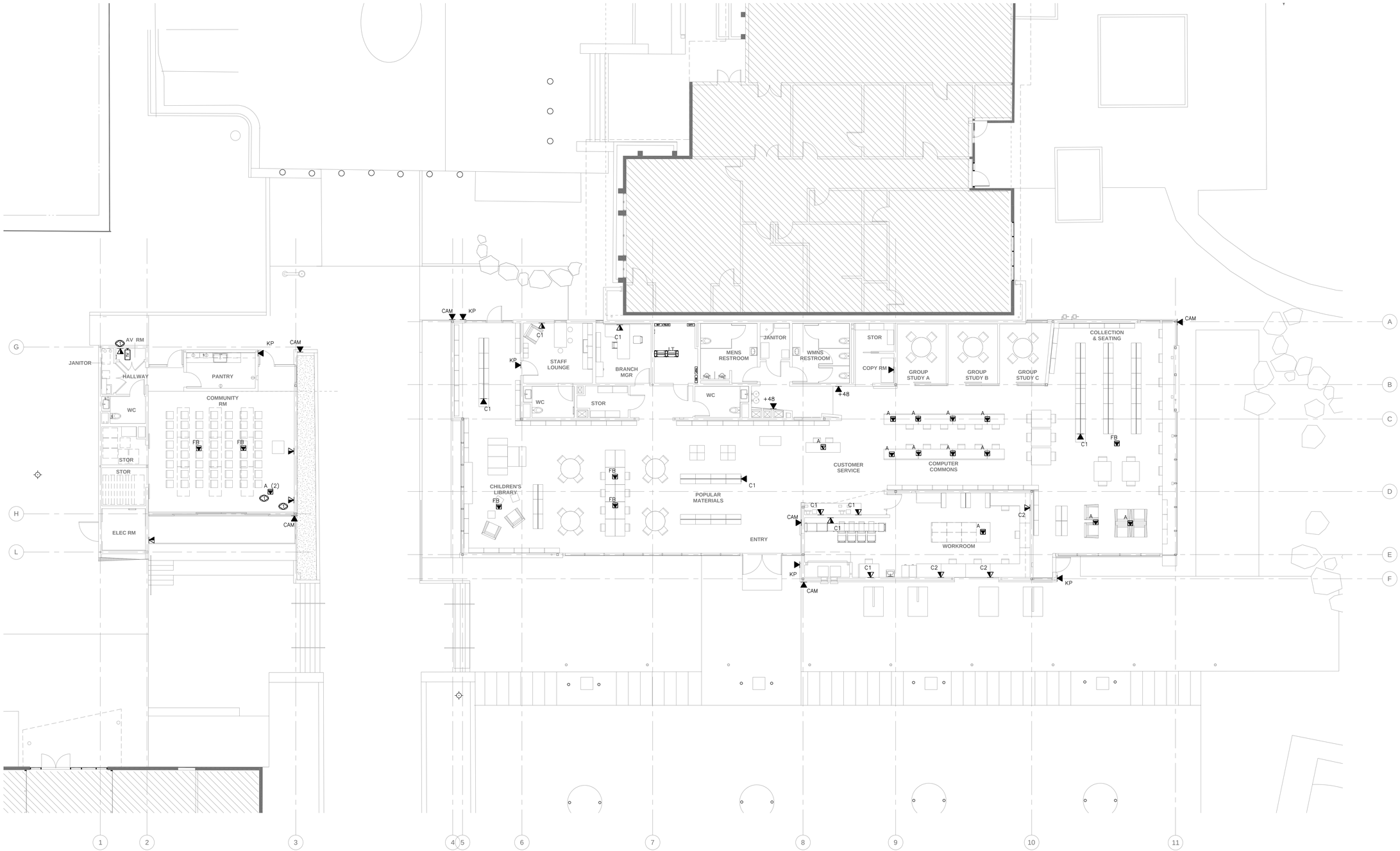

MAIN FLOOR PLAN

SCALE: 1/8" = 1'-0"

1

NOTE: VOICE/DATA WORK AREA OUTLETS

TYPE A: (4) CAT 6 LOCATE IN COMBO FLOORBOX

TYPE FB: (6) CAT 6 IN CONSOLIDATION BOX, WITH 25FT FLEXIBLE CABLE BUNDLE FOR MULTI-PURPOSE USE. LOCATE UNDER FLOOR

TYPE KP: (1) CAT 6 FOR KEY PAD ENTRY ACCESS

TYPE CAM: (1) CAT 6 FOR CAMERA - LOCATE EXTERIOR CAMERAS IN SOFFIT. COORD. W/ ARCHITECT

TYPE C1: (4) CAT 6 DATA

TYPE C2: (6) CAT 6 DATA

TYPE F: (1) RG-6 QUAD SHIELD COAX

NOTE:

(1) DATA LOCATED IN AV BOX. SEE AV DRAWINGS.

PICO BRANCH LIBRARY

2201 Pico Blvd.
Santa Monica, CA 90404

PROJECT

KoningEizenbergArchitecture
1454 25th St, Santa Monica, CA 90404

310.828.6131 info@kearch.com
310.828.0719 fax www.kearch.com

ARCHITECT'S PROJECT NO.
1001

ARCHITECT

All designs, ideas, arrangements and plans indicated by these drawings are the property and copyright of the Architect and shall neither be used on any other work nor be disclosed to any other person for any use whatsoever without written permission.

Koning Eizenberg Architecture and/or its principals and employees waives any and all liability or responsibility for problems that may occur when these plans, drawings, specifications, and/or designs are followed without the professional's guidance with ambiguities, or conflicts which are alleged.

Veneklasen Associates
Consultants in Acoustics | AV | IT | Environmental Noise
1711 Sixteenth Street
Santa Monica, CA 90404
(310) 450-1733
www.veneklasen.com

CONSULTANT

City of Santa Monica
Architecture Services
1437 4TH STREET, SUITE 300
SANTA MONICA, CA 90401
TEL. (310) 458-2205
FAX. (310) 399-1541
architecture@smgov.net

DATE : _____ 20 __
SUBMITTED BY :

DATE : _____ 20 __
APPROVED BY :
Miriam Mulder,
Architecture Services Manager
CITY OF SANTA MONICA
DEPARTMENT OF PUBLIC WORKS

REVIEWED BY : DATE : _____ 20 __

REVIEWED BY : DATE : _____ 20 __

REVIEWED BY : DATE : _____ 20 __

CITY CLIENT

NO.	DATE	BY	DESCRIPTION

REVISIONS

ISSUE
65% CONSTRUCTION DOCUMENTS / BID SET

DATE
01/23/2012

DRAWING NO. **6693**

SHEET OF SHEETS

SHEET TITLE
IT MAIN FLOOR PLAN

SHEET NO.
T1.01

SHEET OF

DWG NO. -

TITLE OF PROJECT :

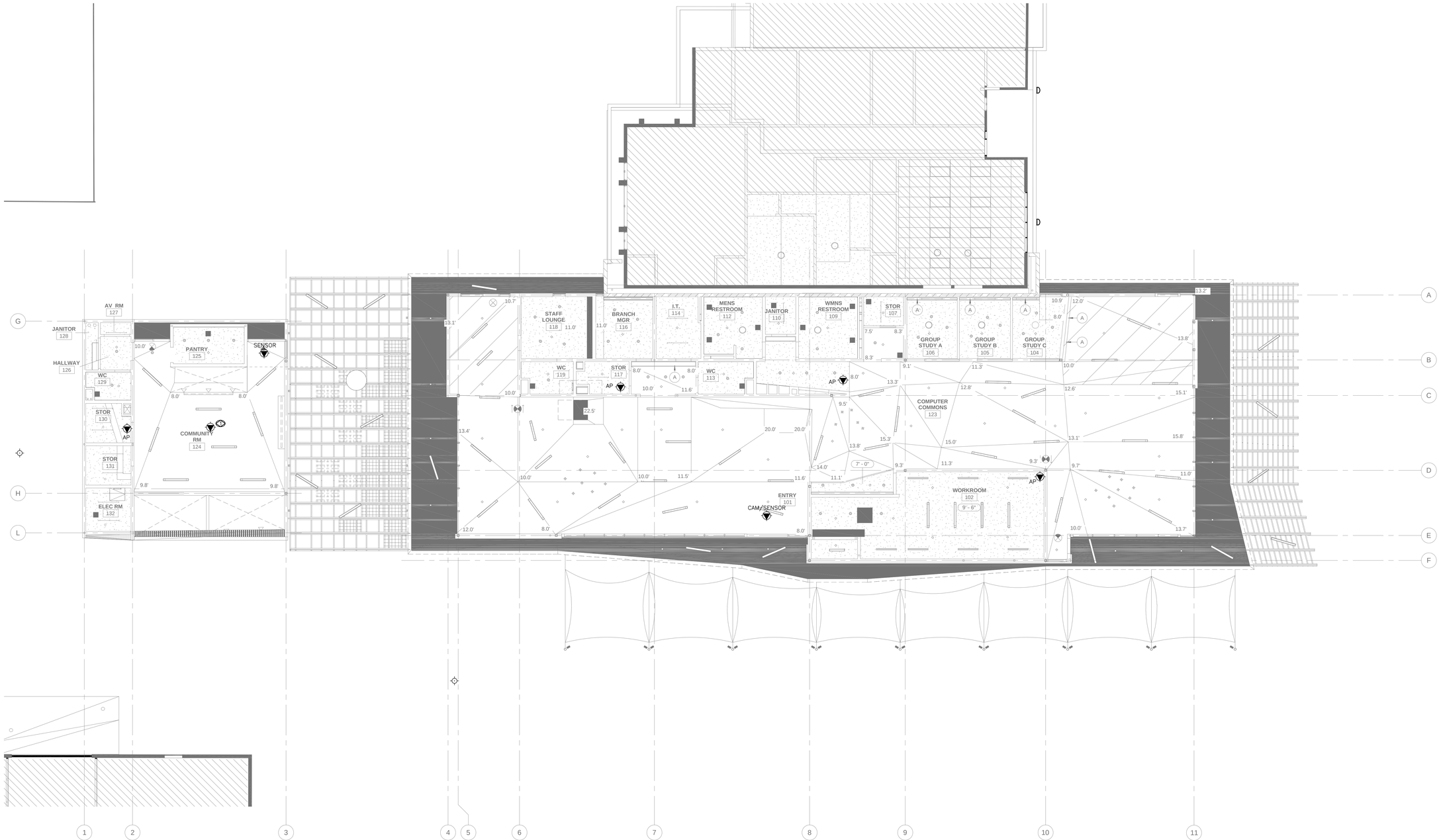

REFLECTIVE CEILING PLAN

SCALE: 1/8" = 1'-0"

1

NOTE - WIRELESS ACCESS POINTS:

1. ROUTE ALL ACCESS POINT CAT 6 CABLES TO NEAREST COMMUNICATIONS ROOM..
2. FOR ACCESSIBLE CEILINGS TERMINATE ALL ACCESS POINT DATA DROPS INTO A SURFACE MOUNTED BOX WITH A 10FT. SERVICE LOOP.
3. FOR HARD LID CEILINGS PROVIDE AND INSTALL WIRELESS AP ENCLOSURE. INSTALL DATA DROP INTO A SURFACE MOUNTED BOX LOCATED INSIDE THE ENCLOSURE.
4. ALL ACCESS POINTS SHALL RECEIVE POWER OVER ETHERNET. LOCAL POWER IS NOT REQUIRED.
5. FINAL PLACEMENT OF WIRELESS ACCESS POINTS TO BE DETERMINED AFTER WIRELESS SITE SURVEY BY SANTA MONICA CITY WIRELESS CONSULTANT..

NOTE:

(1) DATA LOCATED IN AV BOX. SEE AV DRAWINGS.

SHEET OF

DWG NO. -

TITLE OF PROJECT:

PICO BRANCH LIBRARY

2201 Pico Blvd.
Santa Monica, CA 90404

PROJECT

KoningEizenbergArchitecture
1454 25th St, Santa Monica, CA 90404

310.828.6131 info@kearch.com
310.828.0719 fax www.kearch.com

ARCHITECT'S PROJECT NO.
1001

ARCHITECT

All designs, ideas, arrangements and plans indicated by these drawings are the property and copyright of the Architect and shall neither be used on any other work nor be disclosed to any other person for any use whatsoever without written permission.

Koning Eizenberg Architecture and/or its principals and employees waives any and all liability or responsibility for problems that may occur when these plans, drawings, specifications, and/or designs are followed without the professional's guidance with ambiguities, or conflicts which are alleged.

Veneklasen Associates
Consultants in Acoustics | AV | IT | Environmental Noise
1711 Sixteenth Street
Santa Monica, CA 90404
(310) 450-1733
www.veneklasen.com

CONSULTANT

City of Santa Monica
Architecture Services

1437 4TH STREET, SUITE 300
SANTA MONICA, CA 90401
TEL. (310) 458-2205
FAX. (310) 399-1541
architecture@smgov.net

SUBMITTED BY : DATE : _____ 20 __

APPROVED BY : DATE : _____ 20 __
Miriam Mulder,
Architecture Services Manager
CITY OF SANTA MONICA
DEPARTMENT OF PUBLIC WORKS

REVIEWED BY : DATE : _____ 20 __

REVIEWED BY : DATE : _____ 20 __

REVIEWED BY : DATE : _____ 20 __

CITY CLIENT

NO.	DATE	BY	DESCRIPTION

REVISIONS

ISSUE
65% CONSTRUCTION DOCUMENTS / BID SET

DATE
01/23/2012

DRAWING NO. **6693**

SHEET OF SHEETS

SHEET TITLE
IT REFLECTIVE CEILING PLAN

SHEET NO.
T2.01

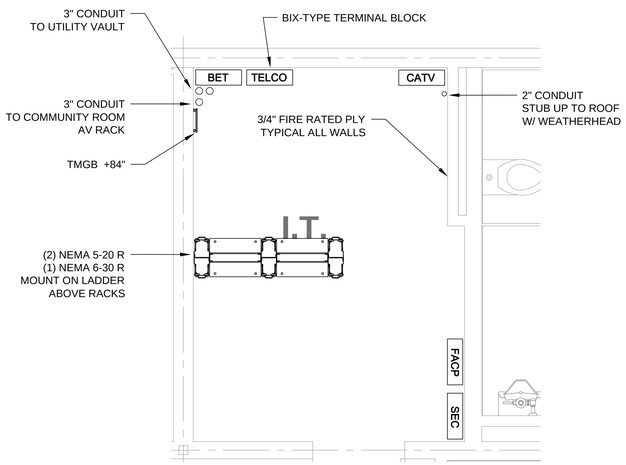

TEF - RACK LAYOUT | SCALE: 1/2" = 1'-0" | 1

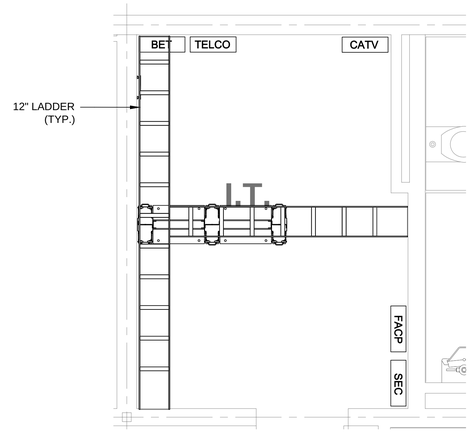

TEF - CABLE PATHWAYS | SCALE: 1/2" = 1'-0" | 2

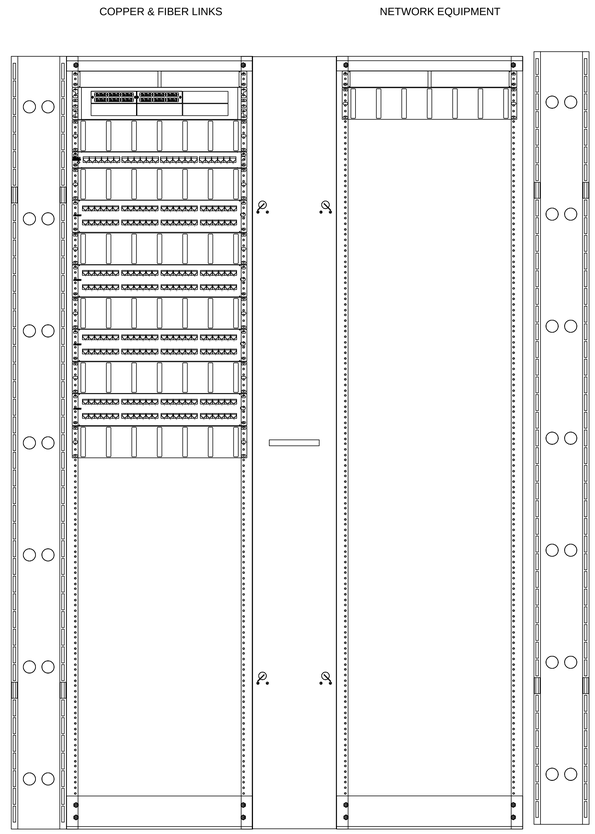

TEF RACK ELEVATION | SCALE: NTS | 3

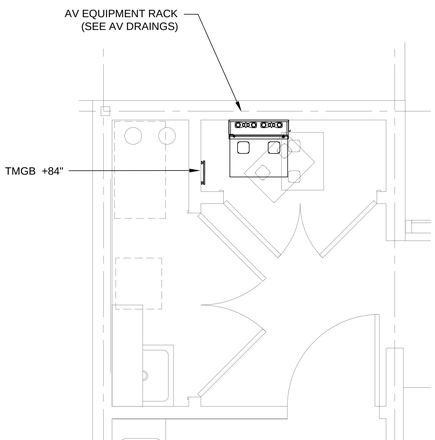

AV RACK LAYOUT | SCALE: 1/2" = 1'-0" | 4

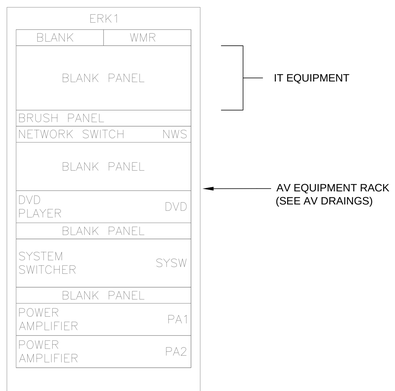

AV EQUIPMENT RACK ELEVATION | SCALE: NTS | 5

PICO BRANCH LIBRARY

2201 Pico Blvd.
Santa Monica, CA 90404

PROJECT

KoningEizenbergArchitecture
1454 25th St, Santa Monica, CA 90404

310.828.6131 info@kearch.com
310.828.0719 fax www.kearch.com

ARCHITECT'S PROJECT NO.
1001

ARCHITECT

All designs, ideas, arrangements and plans indicated by these drawings are the property and copyright of the Architect and shall neither be used on any other work nor be disclosed to any other person for any use whatsoever without written permission.

Koning Eizenberg Architecture and/or its principals and employees waives any and all liability or responsibility for problems that may occur when these plans, drawings, specifications, and/or designs are followed without the professional's guidance with ambiguities, or conflicts which are alleged.

Veneklasen Associates
Consultants in Acoustics | AV | IT | Environmental Noise
1711 Sixteenth Street
Santa Monica, CA 90404
(310) 450-1733
www.veneklasen.com

CONSULTANT

City of Santa Monica
Architecture Services

1437 4TH STREET, SUITE 300
SANTA MONICA, CA 90401
TEL. (310) 458-2205
FAX. (310) 399-1541
architecture@smgov.net

SUBMITTED BY : DATE : 20

APPROVED BY : DATE : 20
Miriam Mulder,
Architecture Services Manager

CITY OF SANTA MONICA
DEPARTMENT OF PUBLIC WORKS

REVIEWED BY : DATE : 20

REVIEWED BY : DATE : 20

REVIEWED BY : DATE : 20

CITY CLIENT

NO.	DATE	BY	DESCRIPTION

REVISIONS

ISSUE
65% CONSTRUCTION DOCUMENTS / BID SET

DATE
01/23/2012

DRAWING NO. **6693**

SHEET OF SHEETS

SHEET TITLE
IT EQUIPMENT ROOM LAYOUTS

SHEET NO.
T4.51

SHEET OF

DWG. NO. -

TITLE OF PROJECT:

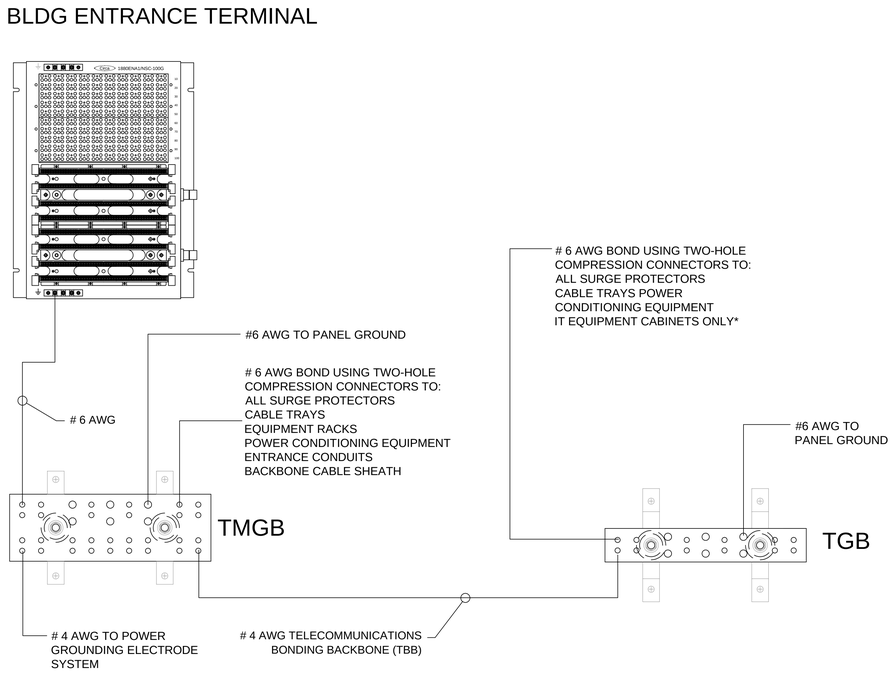

TELECOM ROOMS GROUNDING DIAGRAM | SCALE: NTS | 1

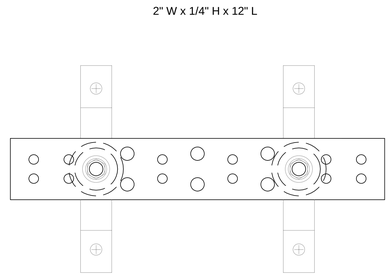

TELECOMMUNICATIONS GROUNDING BUSBAR (TGB) | SCALE: NTS | 2

NOTES:

GROUNDING AND BONDING

COMPLY WITH ALL APPLICABLE CODES AND ORDINANCES. REFER TO NATIONAL ELECTRICAL CODE SECTION 250, ANSA/EIE/EIA-607 (CSA T527) AND DIVISION 27 05 26 SPECIFICATIONS.

TMGB MUST BE LOCATED SO THAT IT IS ACCESSIBLE TO TELECOMMUNICATIONS PERSONNEL.

LOCATION SHOULD BE CHOSEN THAT MINIMIZES BONDING CONDUCTOR LENGTH FOR TELECOMMUNICATION CONNECTIONS

TBBS AND OTHER TGBS LOCATED IN SAME SPACE MUST BE BONDED TO THE TGB

BONDING CONDUCTORS USED BETWEEN A TBB AND TGB MUST BE CONTINUOUS AND ROUTED IN THE SHORTEST, STRAIGHT-LINE PATH POSSIBLE. IF SPLICES ARE REQUIRED THEY SHOULD BE ACCESSIBLE, AND LOCATED WITHIN TELECOMMUNICATIONS SPACES.

INSTALL THE TGB AS CLOSE AS PRACTICAL TO THE PANELBOARD

WHEN A PANELBOARD FOR TELECOMMUNICATIONS IS LOCATED IN THE SAME ROOM AS THE TGB, BOND THE PANELBOARD'S ACEG BUS (WHEN EQUIPPED) OR THE ENCLOSURE TO THE TGB

TYPICAL CONNECTIONS ARE MADE USING:

- BOLTS OR CRIMPS (E.G., CONNECTORS, CLAMPS, OR LUGS)--
  WHERE POSSIBLE, IRREVERSIBLE COMPRESSION-TYPE CONNECTIONS AND TWO-HOLE LUGS SHOULD BE USED.
- EXOTHERMIC WELDING APPLIED TO:
  - § CONNECTIONS TO, AND WITHIN, THE AC GROUNDING ELECTRODE SYSTEM.
  - § LOCATIONS REQUIRING MINIMAL MAINTENANCE.
  - § PARTS OF GROUNDING SYSTEMS THAT ARE SUBJECT TO CORROSION OR THAT MUST RELIABLY CARRY HIGH CURRENTS.
  - § ALL CONNECTIONS THAT ARE BURIED.
  - § CABLE-TO-LUG CONNECTIONS.
  - § BONDS TO STRUCTURAL STEEL.

  ALL BONDING CONNECTIONS SHOULD FOLLOW THE MANUFACTURER'S GUIDELINES.

LABEL BOTH ENDS OF EACH GROUNDING CONDUCTOR AS IT PERTAINS TO ITS TERMINATION POINTS, TO AND FROM RESPECTIVELY.

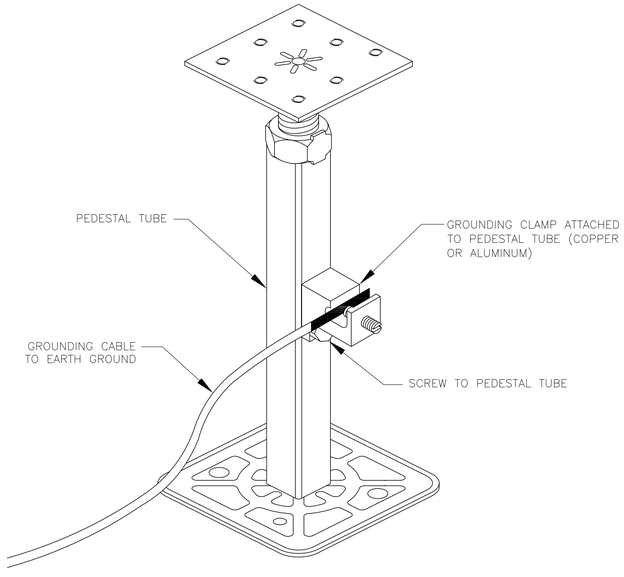

GROUNDING LUG DETAIL | SCALE: NTS | 3

PICO BRANCH LIBRARY

2201 Pico Blvd.
Santa Monica, CA 90404

PROJECT

KoningEizenbergArchitecture
1454 25th St, Santa Monica, CA 90404

310.828.6131 info@kearch.com
310.828.0719 fax www.kearch.com

ARCHITECT'S PROJECT NO.
1001

ARCHITECT

All designs, ideas, arrangements and plans indicated by these drawings are the property and copyright of the Architect and shall neither be used on any other work nor be disclosed to any other person for any use whatsoever without written permission.

Koning Eizenberg Architecture and/or its principals and employees waives any and all liability or responsibility for problems that may occur when these plans, drawings, specifications, and/or designs are followed without the professional's guidance with ambiguities, or conflicts which are alleged.

Veneklasen Associates
Consultants In Acoustics | AV | IT | Environmental Noise
1711 Sixteenth Street
Santa Monica, CA 90404
(310) 450-1733
www.veneklasen.com

CONSULTANT

City of Santa Monica
Architecture Services

1437 4TH STREET, SUITE 300
SANTA MONICA, CA 90401
TEL. (310) 458-2205
FAX. (310) 399-1541
architecture@smgov.net

DATE : _____ 20 __
SUBMITTED BY :

DATE : _____ 20 __
APPROVED BY :
Miriam Mulder,
Architecture Services Manager

CITY OF SANTA MONICA
DEPARTMENT OF PUBLIC WORKS

REVIEWED BY : DATE : _____ 20 __

REVIEWED BY : DATE : _____ 20 __

REVIEWED BY : DATE : _____ 20 __

CITY CLIENT

NO.	DATE	BY	DESCRIPTION

REVISIONS

ISSUE
65% CONSTRUCTION DOCUMENTS / BID SET

DATE
01/23/2012

DRAWING NO. **6693**

SHEET OF SHEETS

SHEET TITLE
IT GROUNDING DETAILS

SHEET NO.
T6.01

SHEET OF

DWG. NO. - -

TITLE OF PROJECT:

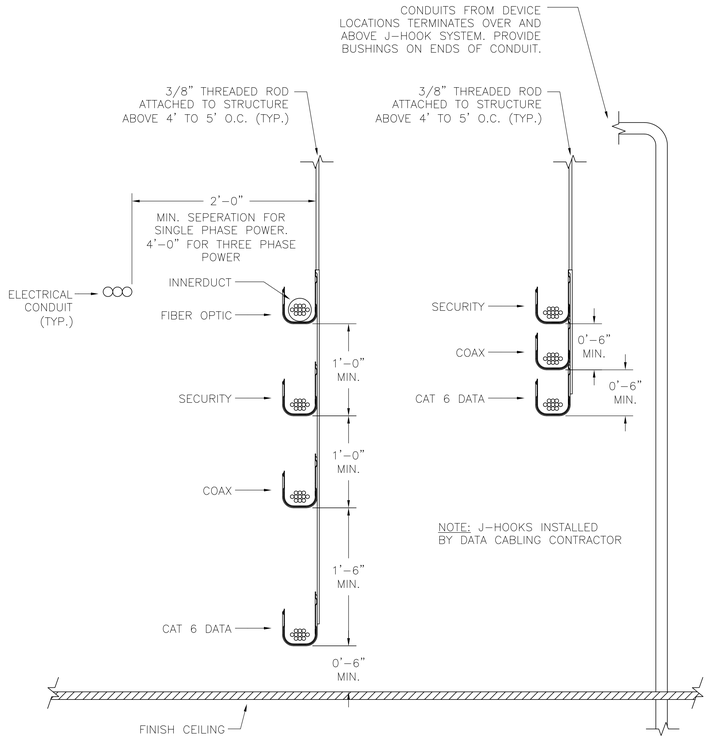

TYPICAL SIGNAL DISTRIBUTION VIA J-HOOKS DETAIL ABOVE CEILING

SCALE: NTS

1

PART NO.	FIG.	"A"	"B"	RIGID/EMT*	"C"
CAT64CD1B	"A"	7 21/64"	7 11/64"	ø3/4"	1 29/32"
CAT21CD1B	"B"	4 23/64"	4 3/16"	ø3/4"	1 3/8"
CAT32CD1B	"B"	4 43/64"	4 3/4"	ø3/4"	1 3/8"
CAT12CD1B	"C"	3 5/32"	3 23/64"	ø3/4"	7/8"

*WILL ALSO ACCOMMODATE 3/4" TO 1" SQUARE PEDESTAL AND 3/4" TO 1 1/8" ROUND PEDESTAL

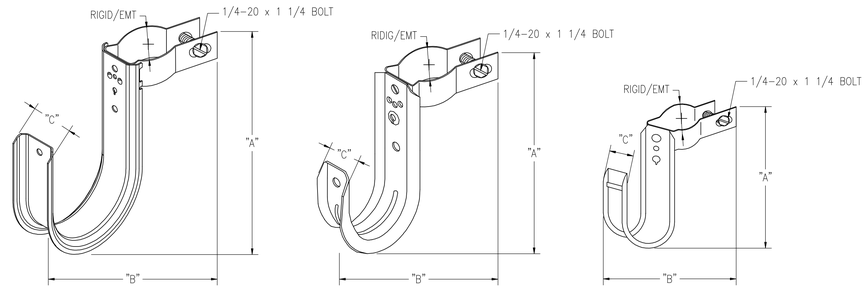

FIG. "A" FIG. "B" FIG. "C"

J-HOOKS FOR UNDER RAISED FLOOR DETAIL

SCALE: NTS

2

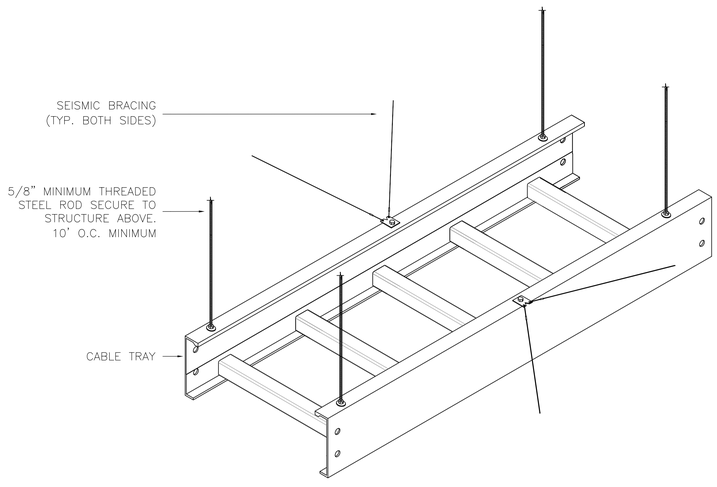

TYPICAL CABLE TRAY SUPPORT DETAIL

SCALE: NTS

3

PICO BRANCH LIBRARY

2201 Pico Blvd.
Santa Monica, CA 90404

PROJECT

KoningEizenbergArchitecture
1454 25th St, Santa Monica, CA 90404

310.828.6131 info@kearch.com
310.828.0719 fax www.kearch.com

ARCHITECT'S PROJECT NO.
1001

ARCHITECT

All designs, ideas, arrangements and plans indicated by these drawings are the property and copyright of the Architect and shall neither be used on any other work nor be disclosed to any other person for any use whatsoever without written permission.

Koning Eizenberg Architecture and/or its principals and employees waives any and all liability or responsibility for problems that may occur when these plans, drawings, specifications, and/or designs are followed without the professional's guidance with ambiguities, or conflicts which are alleged.

Veneklasen Associates
Consultants In Acoustics | AV | IT | Environmental Noise
1711 Sixteenth Street
Santa Monica, CA 90404
(310) 450-1733
www.veneklasen.com

CONSULTANT

City of **Santa Monica**
Architecture Services

1437 4TH STREET, SUITE 300
SANTA MONICA, CA 90401
TEL. (310) 458-2205
FAX. (310) 399-1541
architecture@smgov.net

DATE : _____ 20 __
SUBMITTED BY :

DATE : _____ 20 __
APPROVED BY :
Miriam Mulder,
Architecture Services Manager

CITY OF SANTA MONICA
DEPARTMENT OF PUBLIC WORKS

REVIEWED BY : DATE : _____ 20 __

REVIEWED BY : DATE : _____ 20 __

REVIEWED BY : DATE : _____ 20 __

CITY CLIENT

NO.	DATE	BY	DESCRIPTION

REVISIONS

ISSUE
65% CONSTRUCTION DOCUMENTS / BID SET

DATE
01/23/2012

DRAWING NO. **6693**

SHEET OF SHEETS

SHEET TITLE
IT DETAILS

SHEET NO.
T6.02

SHEET OF

DWG NO. -

TITLE OF PROJECT:

1. Signage shall comply with all governing building codes.

2. Locations of signs shown on the plan drawings are for general information only. Final locations to be determined by Signage Designer and City's Representative on site prior to installation.

3. Coordinate work as necessary with construction of exterior and interior of building structure, including but not limited to the installation of backing plates to support signage elements. Coordinate work as necessary with the site work.

4. Language on signs shown on the drawings subject to change. Final copy to be approved by the City's Representative prior to fabrication.

5. Submit shop drawings showing locations and details of sign construction, color, type size, and style of letters, sizes of signs, and anchoring and installation details for Signage Designer's approval.

6. Provide non-corrosive fasteners, hangers, and mounting devices that are compatible with sign material and finish. For interior signs provide vandal resistant screws and pressure-sensitive, double-sided VHB adhesive foam tape. For exterior signs provide secure tamper proof fasteners.

7. All structural details, fastenings, installations and other construction or fabrication methodology of a technical nature is the sole responsibility of the Fabricator.

8. Attachment components presented in this document are for design intent purposes only. Fabricator shall provide shop drawings of installation details for approval to be used as final documents.

9. All penetrations to be made waterproof and rust proof and shall be kept to a minimum. Contractor/fabricator to present methods of waterproofing at penetrations for approval. No exceptions.

10. Attachment components presented in this document are for design intent purposes only. Provide shop drawings of installation details to be used as final documents.

11. Verify all installation methods.

12. Grind and smooth all visible welds when applicable.

13. All edges and corners to be eased unless otherwise noted. All fabricated materials to have smooth, machined edges free from cracks, chips or other adverse conditions.

14. Layout proofs shall be provided by the Fabricator to the City's Representative via shop drawings for approval and sign-off.

15. Conflicting information between the drawings and the specs to be brought to the attention of the City's representative and the Signage Designer.

16. Other materials, not specifically described but required for a complete and proper installation of sign, shall be as approved. No substitutions without the approval of the Signage Designer and/or the City's Representative.

17. All lettering applications shall utilize, except where specified, typefaces designated for sign lettering on this project. Typographic substitutions shall not be acceptable.

18. All painted, printed and fabricated finishes to be smooth, free of scratches, gouges, air bubbles, foreign matter or other imperfections.

19. All applied vinyl graphics to be smooth, free of scratches, gouges, air bubbles, foreign matter or other imperfections. Durability of vinyl graphics shall be five years minimum (under normal conditions).

20. Apply copy and graphics to substrates using the photographic screen printing process using pre-tested compatible paints and inks only. All screen-printed images shall be of high resolution with smooth edges free from nicks or sawtooth edges. Inks and paints shall be colorfast, permanent and have compatible adhesion to specified substrates. Durability of applied graphics shall be seven years minimum (under normal conditions).

21. Letterforms and symbols shall be photographically precise, crisp, clean and free of ticks, discontinuous curves, free of line waves, cut or ragged edges, edge build-up, bleeding surface pinholes, and other imperfections. Letterforms shall conform to the prescribed letterform proportions.

22. Unless otherwise indicated, letterforms shall be aligned to maintain a baseline parallel to the sign format.

23. All signs to be level and true.

24. Provide blocking and shims, as necessary, to ensure adequate fixing to substrate.

25. All identification, informational and directional signs will have non-glare backgrounds.

26. The contrast between characters and background will be 70% min.

27. Visual characters can be serif or sans serif, upper or lower case.

28. Tactile (raised) characters will be raised 1/32".

29. Raised characters must be sans serif and all uppercase. Character height: 5/8" min., 2"max.

30. Raised characters must be accompanied by California Grade 2 Braille dots. Dots will berounded or domed.

31. Tactile signs must be installed adjacent to specific door they identify, at 60" on center, AFF. Sign must not be installed behind an obstruction, and reader must be able to approach sign within 3" without being hit by swing of door.

32. All sign panels to have eased edges. Panel signs mounted on posts/poles will have eased edges and raidiused corners.

33. Place International Symbol of Accessibility at each accessible building entrance. Where all entrances are not accessible, place directional or informational sign so that steps do not need to be retraced, to direct from inaccessible to accessible entrances. Include ISA on sign along with appropriate arrow and/or text.

34. All metal paint finishes shall be Mathews Acrylic Polyurethane w/ Mathews Primer and Metal Pre-treatments or equal with a polyure-thane anti-UV clear coat with a 20% lo sheen reflectance. Graffiti resistant.

35. One piece construction required for all plaques. Laminated layers not acceptable unless UNO.

3 GENERAL NOTES

NTS

ITEM	COLOR OR VDC FILM	NOTES
1	BM 2037-20 Jade Green	Existing sign color
2	BM 2032-10 Neon Green	Existing sign color
3	BM 2034-30 Grassy Fields	Existing sign color
4	BM 2155-10 Desert Sunset	Existing sign color
5	BM OC-117 Simply White	Existing sign color
6	Custom color TBD	
7	Custom color TBD	
8	Custom color TBD	
9	Custom color TBD	
10	Custom color TBD	
11	Custom color TBD	
12	Custom color TBD	
13	Custom color TBD	
14	Custom color TBD	
15	Custom film TBD	Vinyl to be 3M Scotchlite Cast Vinyl or 3M Scotchlite Reflective Vinyl Sheeting unless otherwise specified on drawings, 7 yr. outdoor durability minimum.
16	Custom film TBD	See above for info
17	Custom film TBD	See above for info
18	Custom film TBD	See above for info
19	Custom film TBD	See above for info

2 COLOR SCHEDULE

NTS

ABDCDEFGHIJ
KLNOPQRSTUV
WXYZ abdcdefg
hijklmnoqrstuv
wxyz1234567890

Verdana – Used for signs requiring raised characters and braille.

ABDCDEFGHIJ
KLNOPQRSTUV
WXYZ abdcdefgh
ijklmnoqrstuvw
xyz 1234567890

Georgia bold

ABDCDEFGHIJ
KLNOPQRSTUV
WXYZ abdcdefgh
ijklmnoqrstuvw
xyz 1234567890

Georgia regular

Georgia – classic and literary; the serif companion to Verdana.
Used for signs not requiring raised characters and braille.

1 FONT

NTS

GENERAL NOTES

SHEET OF

DWG. NO. -

TITLE OF PROJECT:

PICO BRANCH LIBRARY

2201 Pico Blvd.
Santa Monica, CA 90404

PROJECT

KoningEizenbergArchitecture
1454 25th St, Santa Monica, CA 90404

310.828.6131 info@kearch.com
310.828.0719 fax www.kearch.com

ARCHITECT'S PROJECT NO.
1001

ARCHITECT

All designs, ideas, arrangements and plans indicated by these drawings are the property and copyright of the Architect and shall neither be used on any other work nor be disclosed to any other person for any use whatsoever without written permission.

Koning Eizenberg Architecture and/or its principals and employees waives any and all liability or responsibility for problems that may occur when these plans, drawings, specifications, and/or designs are followed without the professional's guidance with ambiguities, or conflicts which are alleged.

7906 W. 4th St. Los Angeles, Ca 90048
323 658-7955 Fax 323 658-7961

NEWSOM DESIGN

CONSULTANT

City of Santa Monica
Architecture Services

1437 4TH STREET, SUITE 300
SANTA MONICA, CA 90401
TEL. (310) 458-2205
FAX. (310) 399-1541
architecture@smgov.net

SUBMITTED BY : DATE : 20

APPROVED BY : DATE : 20
Miriam Mulder,
Architecture Services Manager

CITY OF SANTA MONICA
DEPARTMENT OF PUBLIC WORKS

REVIEWED BY : DATE : 20

REVIEWED BY : DATE : 20

REVIEWED BY : DATE : 20

CITY CLIENT

NO.	DATE	BY	DESCRIPTION

REVISIONS

ISSUE
65% CONSTRUCTION DOCUMENTS / BID SET

DATE
01/23/2012

DRAWING NO. **6693**

SHEET OF SHEETS

SHEET TITLE
GENERAL NOTES

SHEET NO.
G0

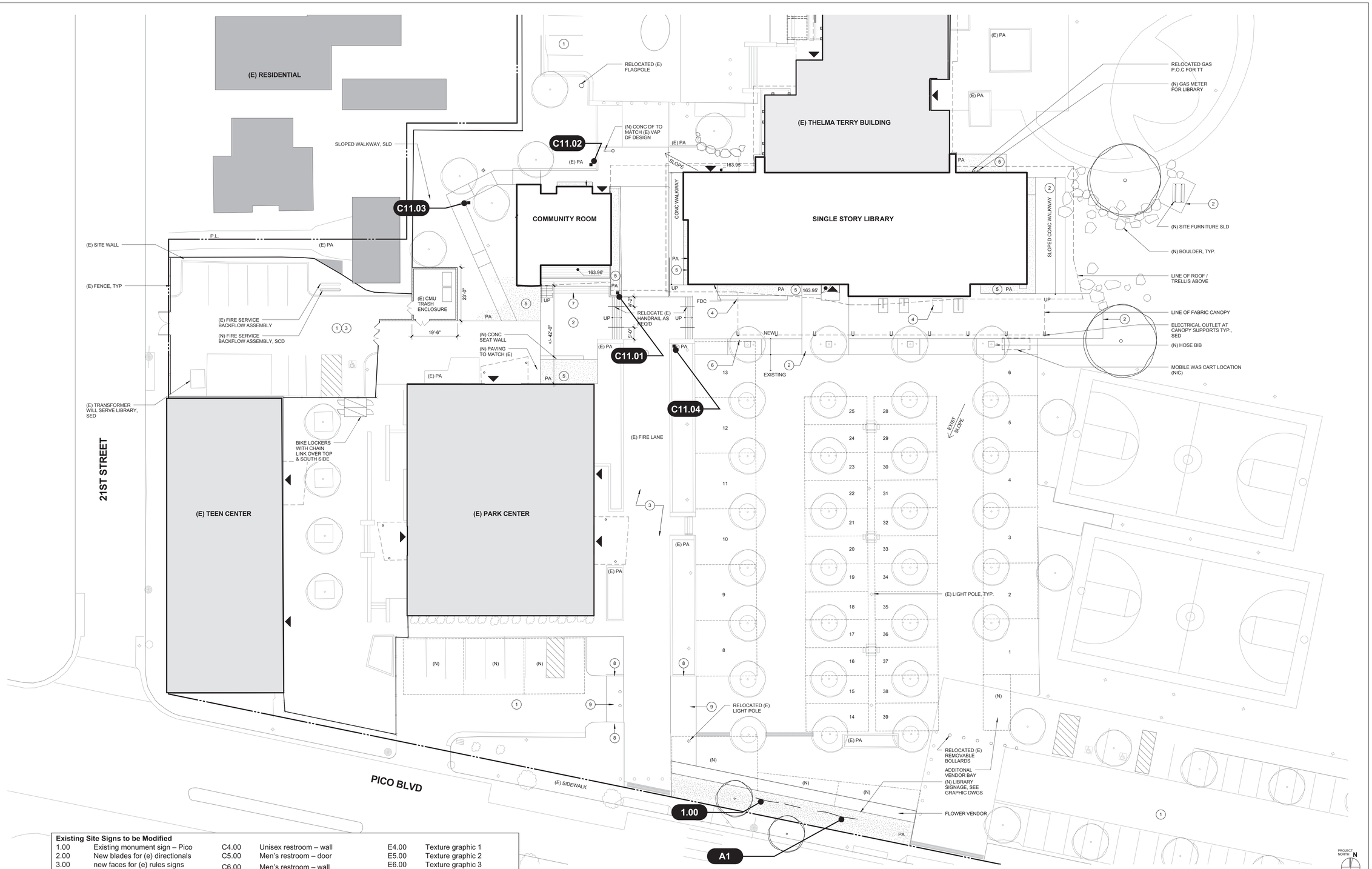

Existing Site Signs to be Modified

1.00	Existing monument sign – Pico
2.00	New blades for (e) directionals
3.00	new faces for (e) rules signs

New Signs

Identity

A1.00	Library monument sign
A2.00	Main building id – south
A3.00	Community building id – south
A4.00	Main building id – north
A5.00	Community building id – north
A6.00	Address
A7.00	Book drop id – exterior
A8.00	Book drop id – interior
A9.00	Check out alcove sign

Directional

B1.00	Exterior library directional – fire lane
B2.00	Exterior library directional – park
B3.00	Restroom directional

Code

C1.00	Tactile exit sign
C2.00	Tactile room sign
C3.00	Unisex restroom – door
C4.00	Unisex restroom – wall
C5.00	Men's restroom – door
C6.00	Men's restroom – wall
C7.00	Women's restroom – door
C8.00	Women's restroom – wall
C9.00	ISA symbol – glass
C10.00	ISA symbol – plaque
C11.00	ISA directional

Miscellaneous

D1.00	Library hours
D2.00	Library rules
D3.00	Stack id holder
D4.00	No smokin
D5.00	Community room art dedication plaque
D6.00	Floor Information holder
D7.00	Desk information holder
D8.00	Door information holder

Graphics

E1.00	Skylight texture graphic
E2.00	Study room back wall graphic
E3.00	Computer desk graphic
E4.00	Texture graphic 1
E5.00	Texture graphic 2
E6.00	Texture graphic 3
E7.00	Info desk graphics

NOTES:

1. Sign Type B2 not shown on plans. Locations TBD. See Sheet G4 for more info .

2. Sign type D3 not shown on plans. See Sheet G6 for more info.

3. Sign type 2.00 not shown on plans. See Sheet G4 for more info.

4. Sign type 3.00 not shown on plans. See Sheet G4 for more info.

5. Sign types D6, D7 & D8 not shown on plans. See Sheet Gx for more info.

SITE SIGN PLAN 0 4' 8' 16' 1/16" = 1'-0" 1

PICO BRANCH LIBRARY

2201 Pico Blvd.
Santa Monica, CA 90404

PROJECT

KoningEizenbergArchitecture
1454 29th St, Santa Monica, CA 90404
310.828.6131 info@kearch.com
310.828.0719 fax www.kearch.com

ARCHITECT'S PROJECT NO.
1001

ARCHITECT

All designs, ideas, arrangements and plans indicated by these drawings are the property and copyright of the Architect and shall neither be used on any other work nor be disclosed to any other person for any use whatsoever without written permission.

Koning Eizenberg Architecture and/or its principals and employees waives any and all liability or responsibility for problems that may occur when these plans, drawings, specifications, and/or designs are followed without the professional's guidance with ambiguities, or conflicts which are alleged.

7906 W. 4th St. Los Angeles, Ca 90048
323 658-7955 Fax 323 658-7961

NEWSOM DESIGN

CONSULTANT

City of Santa Monica Architecture Services
1437 4TH STREET, SUITE 300
SANTA MONICA, CA 90401
TEL. (310) 458-2205
FAX. (310) 399-1541
architecture@smgov.net

DATE : 20
SUBMITTED BY :

DATE : 20
APPROVED BY :
Miriam Mulder,
Architecture Services Manager

CITY OF SANTA MONICA
DEPARTMENT OF PUBLIC WORKS

REVIEWED BY : DATE : 20

REVIEWED BY : DATE : 20

REVIEWED BY : DATE : 20

CITY CLIENT

NO.	DATE	BY	DESCRIPTION

REVISIONS

ISSUE
65% CONSTRUCTION DOCUMENTS / BID SET

DATE
01/23/2012

DRAWING NO. **6693**

SHEET OF SHEETS

SHEET TITLE
SITE SIGN PLAN

SHEET NO. **G1**

SHEET OF

DWG NO. -

TITLE OF PROJECT

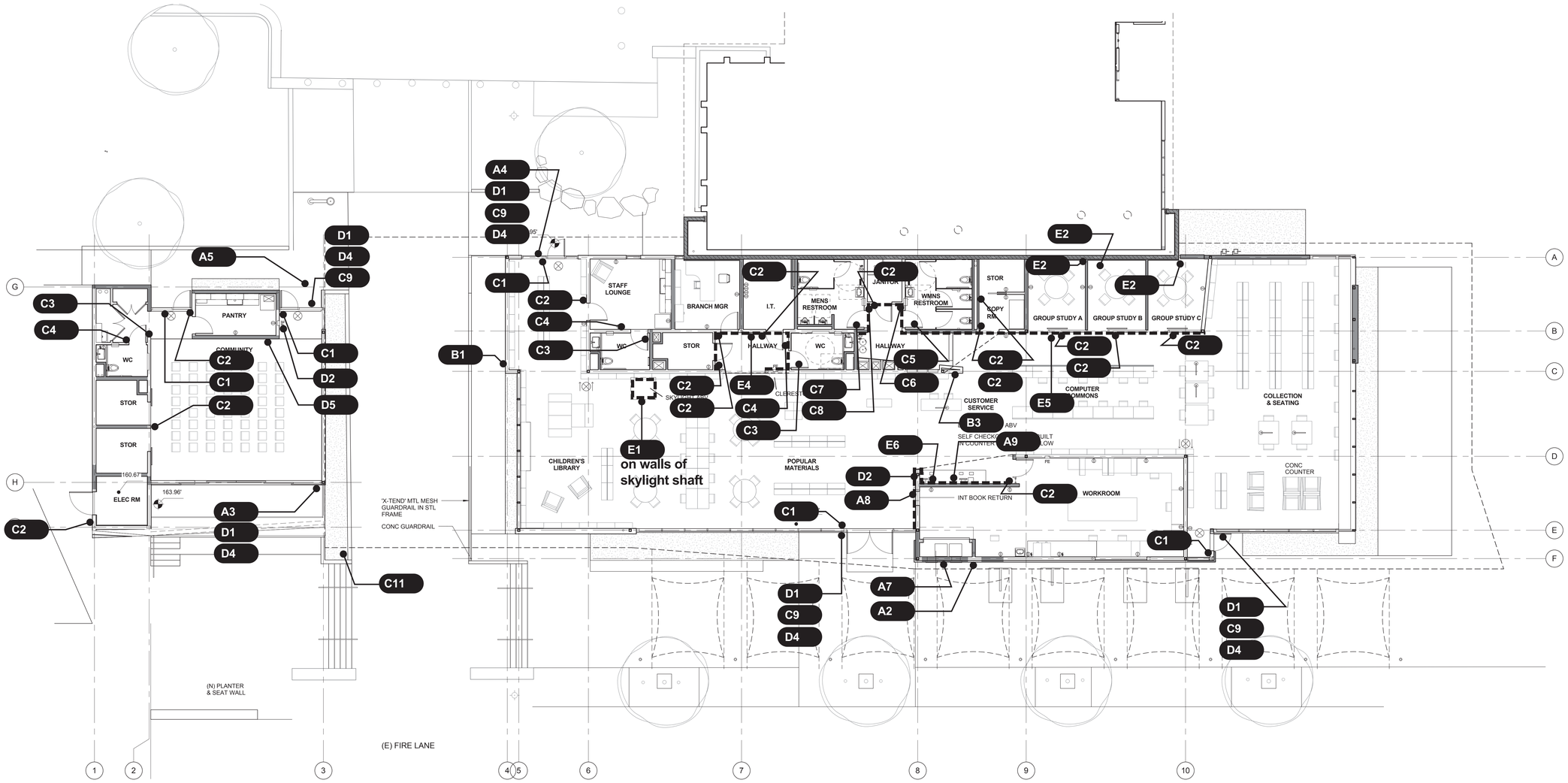

Existing Site Signs to be Modified

1.00	Existing monument sign – Pico
2.00	New blades for (e) directionals
3.00	new faces for (e) rules signs

New Signs

Identity

A1.00	Library monument sign
A2.00	Main building id – south
A3.00	Community building id – south
A4.00	Main building id – north
A5.00	Community building id – north
A6.00	Address
A7.00	Book drop id – exterior
A8.00	Book drop id – interior
A9.00	Check out alcove sign

Directional

B1.00	Exterior library directional – fire lane
B2.00	Exterior library directional – park
B3.00	Restroom directional

Code

C1.00	Tactile exit sign
C2.00	Tactile room sign
C3.00	Unisex restroom – door
C4.00	Unisex restroom – wall
C5.00	Men's restroom – door
C6.00	Men's restroom – wall
C7.00	Women's restroom – door
C8.00	Women's restroom – wall
C9.00	ISA symbol – glass
C10.00	ISA symbol – plaque
C11.00	ISA directional

Miscellaneous

D1.00	Library hours
D2.00	Library rules
D3.00	Stack id holder
D4.00	No smokin
D5.00	Community room art dedication plaque
D6.00	Floor Information holder
D7.00	Desk information holder
D8.00	Door information holder

Graphics

E1.00	Skylight texture graphic
E2.00	Study room back wall graphic
E3.00	Computer desk graphic
E4.00	Texture graphic 1
E5.00	Texture graphic 2
E6.00	Texture graphic 3
E7.00	Info desk graphics

NOTES:

1. Sign Type B2 not shown on plans. Locations TBD. See Sheet G4 for more info .

2. Sign type D3 not shown on plans. See Sheet G6 for more info.

3. Sign type 2.00 not shown on plans. See Sheet G4 for more info.

4. Sign type 3.00 not shown on plans. See Sheet G4 for more info.

5. Sign types D6, D7 & D8 not shown on plans. See Sheet Gx for more info.

PROJECT NORTH N

0 2' 4' 8' 1/8" = 1'-0" 1

PICO BRANCH LIBRARY

2201 Pico Blvd.
Santa Monica, CA 90404

PROJECT

KoningEizenbergArchitecture
1454 29th St, Santa Monica, CA 90404

310.828.6131 info@kearch.com
310.828.0719 fax www.kearch.com

ARCHITECT'S PROJECT NO.
1001

ARCHITECT

All designs, ideas, arrangements and plans indicated by these drawings are the property and copyright of the Architect and shall neither be used on any other work nor be disclosed to any other person for any use whatsoever without written permission.

Koning Eizenberg Architecture and/or its principals and employees waives any and all liability or responsibility for problems that may occur when these plans, drawings, specifications, and/or designs are followed without the professional's guidance with ambiguities, or conflicts which are alleged.

7906 W. 4th St. Los Angeles, Ca 90048
323 658-7955 Fax 323 658-7961

NEWSOM DESIGN

CONSULTANT

City of Santa Monica Architecture Services

1437 4TH STREET, SUITE 300
SANTA MONICA, CA 90401
TEL. (310) 458-2205
FAX. (310) 399-1541
architecture@smgov.net

DATE : 20
SUBMITTED BY :

DATE : 20
APPROVED BY :
Miriam Mulder,
Architecture Services Manager

CITY OF SANTA MONICA
DEPARTMENT OF PUBLIC WORKS

REVIEWED BY : DATE : 20

REVIEWED BY : DATE : 20

REVIEWED BY : DATE : 20

CITY CLIENT

NO.	DATE	BY	DESCRIPTION

REVISIONS

ISSUE
65% CONSTRUCTION DOCUMENTS / BID SET

DATE
01/23/2012

DRAWING NO. **6693**

SHEET OF SHEETS

SHEET TITLE
SIGN PLAN

SHEET NO.
G2

TITLE OF PROJECT:
SIGN PLAN

SHEET OF

DWG. NO. -

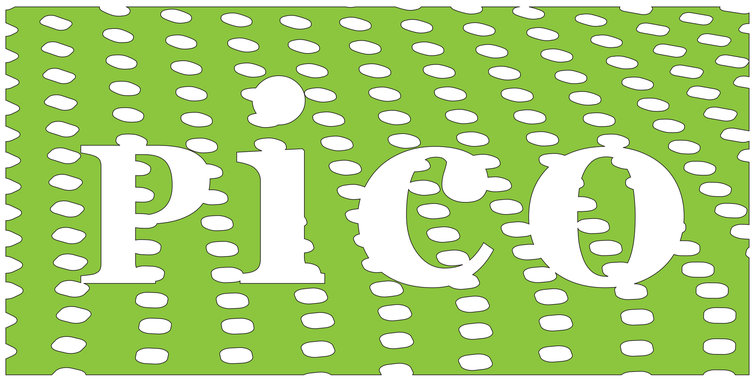

Typical panel with out letters

Existing sign

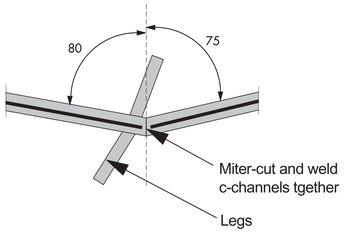

DETAIL

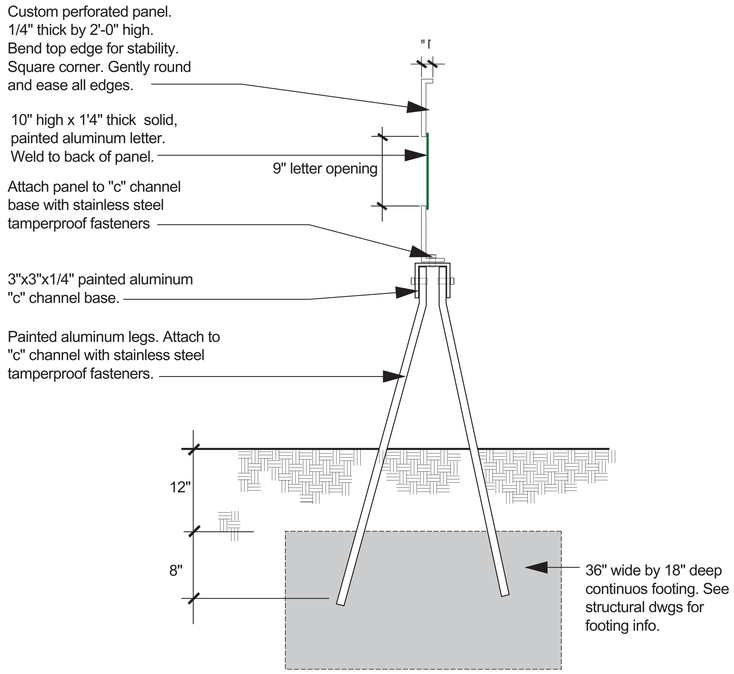

SECTION

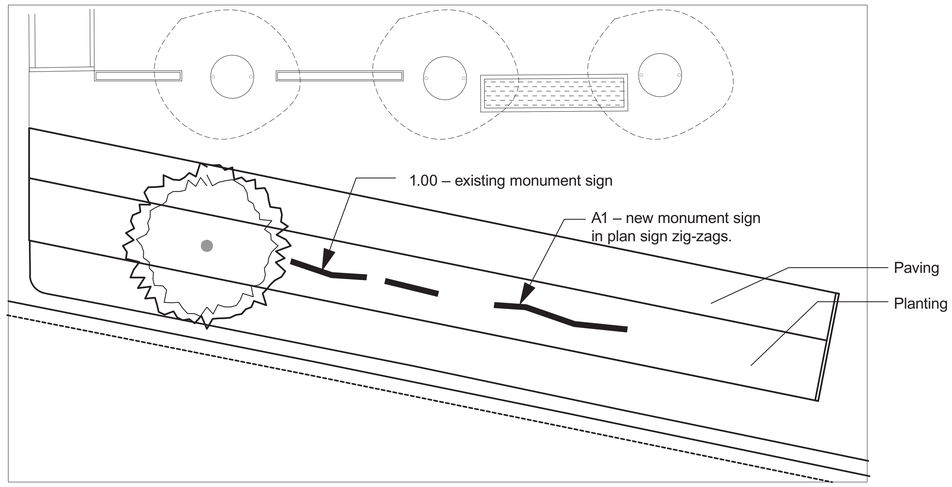

PLAN

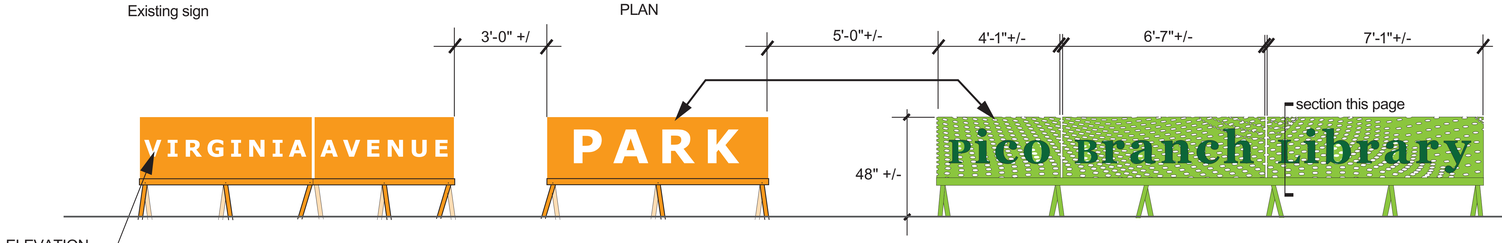

ELEVATION

Existing monument. Relocate along Pico in new reconfigured planter. Final location TBD. Coordinate with Landscape. Repaint (original color) and repair as needed before reinstalling sign.

New library monument sign.1/4" thick painted aluminum panels with custom laser cut perforation pattern. Perforations range in size. Open surface density TBD. Panels zig-zag. Approx total length is 18'-0" +/-.

Cut letters (painted aluminum) weld to back of panels. Paint all faces and edges of letters.

Paint all surfaces, all sides and all edges. Paint all stainless steel fasteners.
Each pair of metal legs is bent at a different angle.

Colors: 1 custom color for panel, legs and fasteners.1 custom color for letters.

1 SIGN TYPE A1.00: ENLARGED PLAN, ELEVATIONS AND DETAILS.

NTS

PICO BRANCH LIBRARY

2201 Pico Blvd.
Santa Monica, CA 90404

PROJECT

KoningEizenbergArchitecture
1454 25th St, Santa Monica, CA 90404

310.828.6131 info@kearch.com
310.828.0719 fax www.kearch.com

ARCHITECT'S PROJECT NO.
1001

ARCHITECT

All designs, ideas, arrangements and plans indicated by these drawings are the property and copyright of the Architect and shall neither be used on any other work nor be disclosed to any other person for any use whatsoever without written permission.

Koning Eizenberg Architecture and/or its principals and employees waives any and all liability or responsibility for problems that may occur when these plans, drawings, specifications, and/or designs are followed without the professional's guidance with ambiguities, or conflicts which are alleged.

7906 W. 4th St. Los Angeles, Ca 90048
323 658-7955 Fax 323 658-7961

NEWSOM DESIGN

CONSULTANT

City of Santa Monica
Architecture Services

1437 4TH STREET, SUITE 300
SANTA MONICA, CA 90401
TEL. (310) 458-2205
FAX. (310) 399-1541
architecture@smgov.net

SUBMITTED BY : DATE : 20

APPROVED BY : DATE : 20
Miriam Mulder,
Architecture Services Manager
CITY OF SANTA MONICA
DEPARTMENT OF PUBLIC WORKS

REVIEWED BY : DATE : 20

REVIEWED BY : DATE : 20

REVIEWED BY : DATE : 20

CITY CLIENT

NO.	DATE	BY	DESCRIPTION

REVISIONS

ISSUE
65% CONSTRUCTION DOCUMENTS / BID SET

DATE
01/23/2012

DRAWING NO. **6693**

SHEET OF SHEETS

SHEET TITLE
ELEVATION & DETAILS

SHEET NO.
G3

ELEVATIONS & DETAILS

SHEET OF

DWG NO. -

TITLE OF PROJECT:

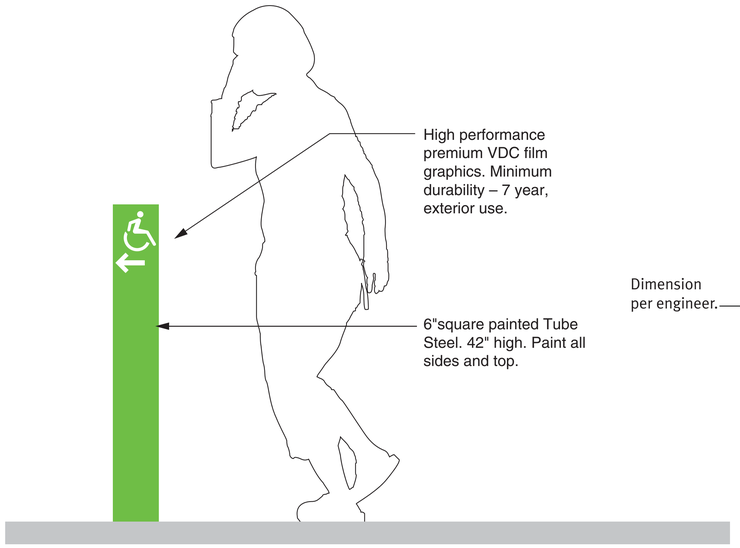

4 SIGN TYPE C11: ISA DIRECTIONAL

1 1/2"=1'-0"

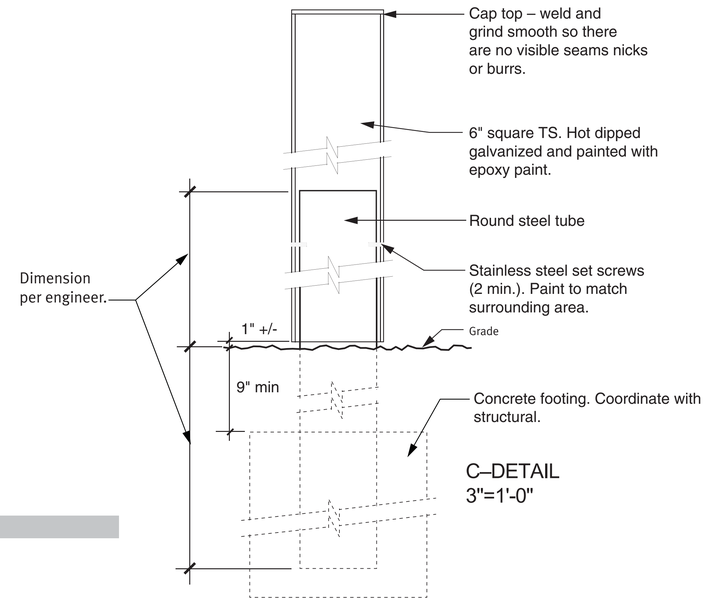

C–DETAIL
3"=1'-0"

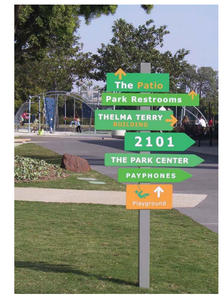

Front and back view of on of the existing directionals.
NOTE: Current configuration may hve changed since photograph was taken. Final configuration with additional Library and Annex blades TBD. The final order of the blades TBD.

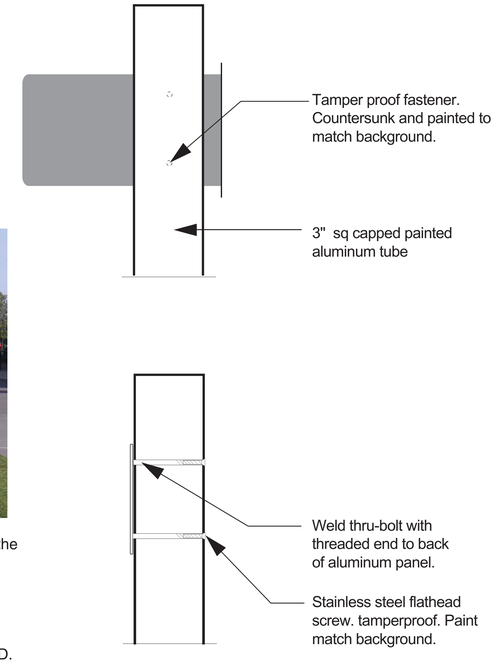

B–BACK VIEW @ BOLTS
3"=1'-0"

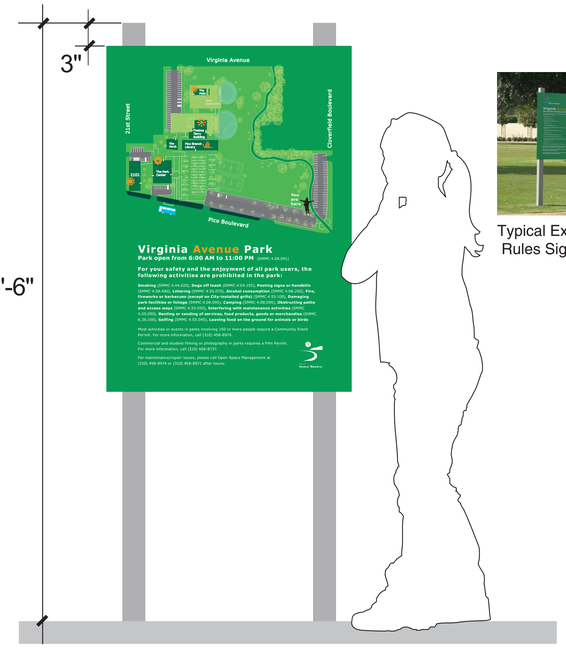

Typical Existing Rules Sign

Replace the 4 existing rules panels with new panels incorporating a "you are here" map.

Existing panels are 32 in by 42 in. New panels may increase in height to 45".

Refurbish (clean, sand, patch, paint, replace attachments if needed) existing support posts.

New panels may be:
1. Painted 1/8" aluminum with direct digitally printed graphics. 1 custom color plus full continuous color graphics. Matte UV and graffitti coating.
2. painted 1/8" aluminum with digital vinyl inkjet printout. Exterior grade with Matte UV and graffitti coating. 1 custom color plus full continuous color graphics.
3. Exterior grade high pressure laminate panel (thickness TBD) such as Folia™ or equal. Waterproof, UV, graffiti, burn and corrosion resistant.

Graphics shown are not final.

3 SIGN TYPE 3.00: NEW FACES FOR EXISTING RULES SIGNS

1 1/2"=1'-0"

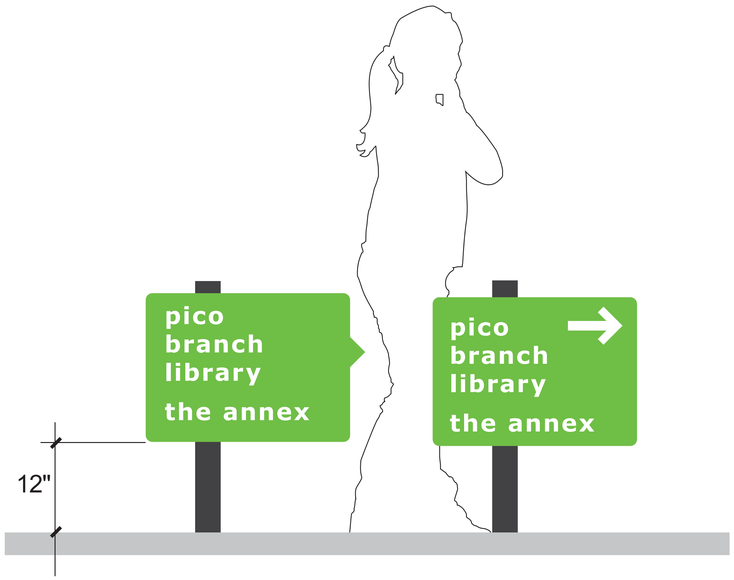

27" x 19" low directionals to new library buildings will assist wayfinding for visitors approaching from Virginia Avenue.

1/8" thick painted aluminum panels. Paint all faces and edges of panels. Silkscreened copy and art. Radiused corners and eased edges all panels. Allow for 3 custom colors TBD. Attach to 3" sq capped painted aluminum tube. See detail 1B – Back view at bolts, for attachment info. Footings required. Coordinate with structural.

Locate in planters. Final locations TBD.

Quantity: 5

2 SIGN TYPE B2: EXTERIOR LIBRARY DIRECTIONAL

1 1/2"=1'-0"

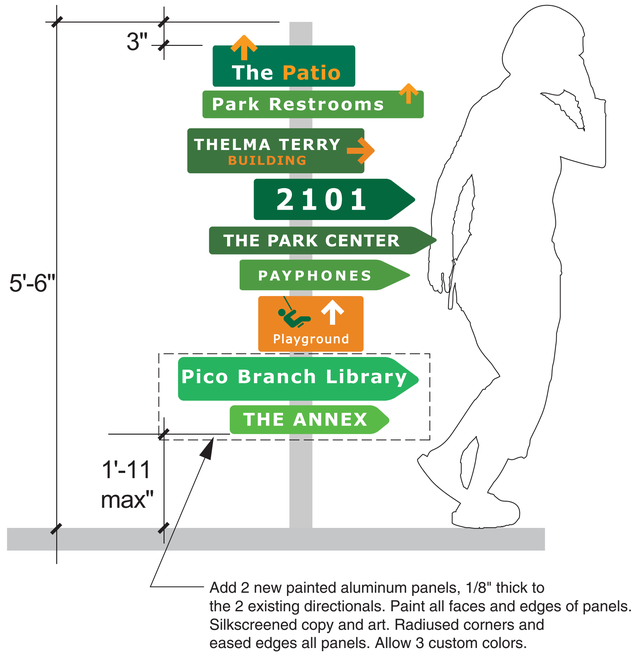

NOTE:
1. Scope of work includes refurbishing (cleaning, sanding, patching, painting, replacing attachments, changing order of blades) existing plaques.

2. The 2 existing directionals have different configurations. New blades will be different at each location.

1 SIGN TYPE 2.00: ADD BLADES TO EXISTING DIRECTIONALS

NTS

ELEVATIONS & DETAILS

SHEET OF

DWG NO. -

TITLE OF PROJECT:

PICO BRANCH LIBRARY

2201 Pico Blvd.
Santa Monica, CA 90404

PROJECT

KoningEizenbergArchitecture
1454 29th St, Santa Monica, CA 90404

310.828.6131 info@kearch.com
310.828.0719 fax www.kearch.com

ARCHITECT'S PROJECT NO.
1001

ARCHITECT

All designs, ideas, arrangements and plans indicated by these drawings are the property and copyright of the Architect and shall neither be used on any other work nor be disclosed to any other person for any use whatsoever without written permission.

Koning Eizenberg Architecture and/or its principals and employees waives any and all liability or responsibility for problems that may occur when these plans, drawings, specifications, and/or designs are followed without the professional's guidance with ambiguities, or conflicts which are alleged.

7906 W. 4th St. Los Angeles, Ca 90048
323 658-7955 Fax 323 658-7961

NEWSOM DESIGN

CONSULTANT

City of Santa Monica
Architecture Services

1437 4TH STREET, SUITE 300
SANTA MONICA, CA 90401
TEL. (310) 458-2205
FAX: (310) 399-1541
architecture@smgov.net

SUBMITTED BY : DATE : 20

APPROVED BY : Miriam Mulder, Architecture Services Manager DATE : 20

CITY OF SANTA MONICA
DEPARTMENT OF PUBLIC WORKS

REVIEWED BY : DATE : 20

REVIEWED BY : DATE : 20

REVIEWED BY : DATE : 20

CITY CLIENT

NO.	DATE	BY	DESCRIPTION

REVISIONS

ISSUE
65% CONSTRUCTION DOCUMENTS / BID SET

DATE
01/23/2012

DRAWING NO. **6693**

SHEET OF SHEETS

SHEET TITLE
ELEVATION & DETAILS

SHEET NO.
G4

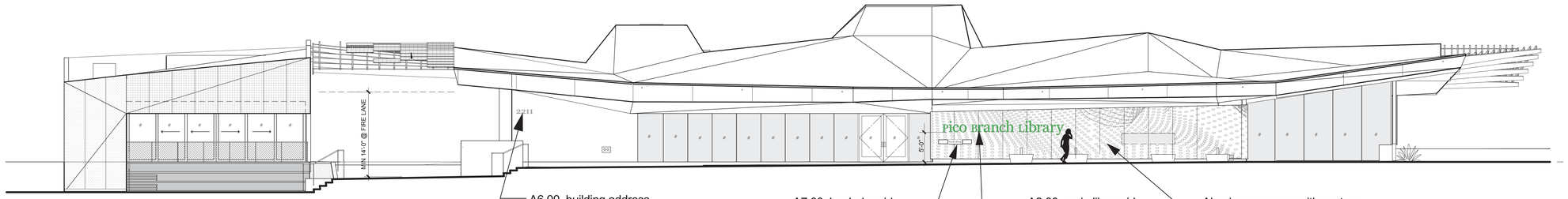

1 SIGN TYPE A2 – MAIN BUILDING ID – SOUTH:
ELEVATION, OPTION 1

1/8"=1'-0"

1 1/2"=1'-0"

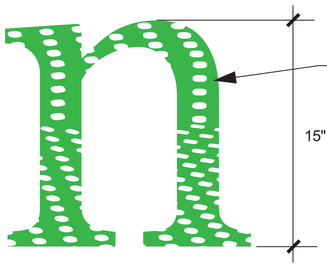

Painted alumium letters with custom laser cut perforations. 1/4" thick.
Each letter one piece construction. 1 custom color.

NOTE: Shape, pattern and size of custom perforated slots TBD.

3"=1'-0"

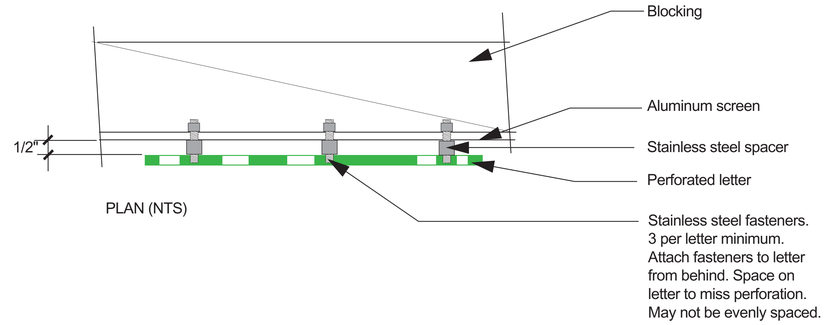

PLAN (NTS)

2 SIGN TYPE A2 – MAIN BUILDING ID – SOUTH:
OPTION 1 DETAIL

Scale as shown

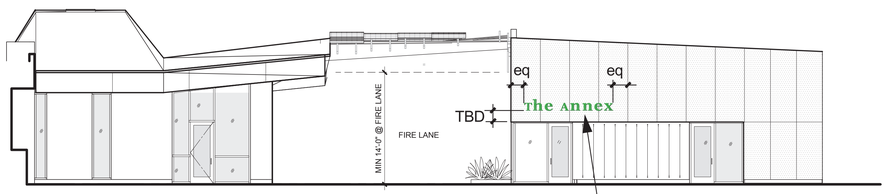

A5.00, main community building id.
Similar to A2. See details above for info.

3 SIGN TYPE A4 – COMMUNITY BUILDING ID – NORTH:
ELEVATION, OPTION 1

1/8"=1'-0"

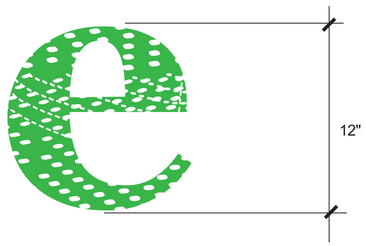

NOTE: Shape, pattern and size of custom perforated slots TBD.
Perforation varies per layer.

ELEVATIONS & DETAILS

PICO BRANCH LIBRARY

2201 Pico Blvd.
Santa Monica, CA 90404

PROJECT

KoningEizenberg Architecture
1454 25th St, Santa Monica, CA 90404
310.828.6131 info@kearch.com
310.828.0719 fax www.kearch.com

ARCHITECT'S PROJECT NO.
1001

ARCHITECT

All designs, ideas, arrangements and plans indicated by these drawings are the property and copyright of the Architect and shall neither be used on any other work nor be disclosed to any other person for any use whatsoever without written permission.

Koning Eizenberg Architecture and/or its principals and employees waives any and all liability or responsibility for problems that may occur when these plans, drawings, specifications, and/or designs are followed without the professional's guidance with ambiguities, or conflicts which are alleged.

7906 W. 4th St. Los Angeles, Ca 90048
323 658-7955 Fax 323 658-7961

NEWSOM DESIGN

CONSULTANT

City of Santa Monica
Architecture Services
1437 4TH STREET, SUITE 300
SANTA MONICA, CA 90401
TEL. (310) 458-2205
FAX. (310) 399-1541
architecture@smgov.net

SUBMITTED BY : DATE : 20

APPROVED BY : DATE : 20
Miriam Mulder,
Architecture Services Manager
CITY OF SANTA MONICA
DEPARTMENT OF PUBLIC WORKS

REVIEWED BY : DATE : 20

REVIEWED BY : DATE : 20

REVIEWED BY : DATE : 20

CITY CLIENT

NO.	DATE	BY	DESCRIPTION

REVISIONS

ISSUE
65% CONSTRUCTION DOCUMENTS / BID SET

DATE
01/23/2012

DRAWING NO. **6693**

SHEET OF SHEETS

SHEET TITLE
ELEVATION & DETAILS

SHEET NO.
G5

SHEET OF

DWG NO. -

TITLE OF PROJECT

A9.0 – Acrylic dimensional letters.
See sheet A8 for more info.

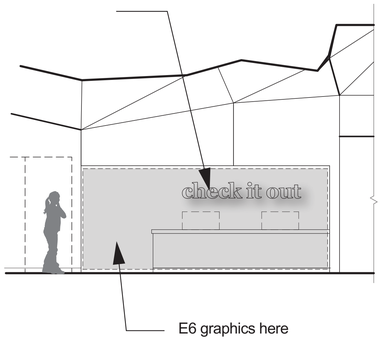

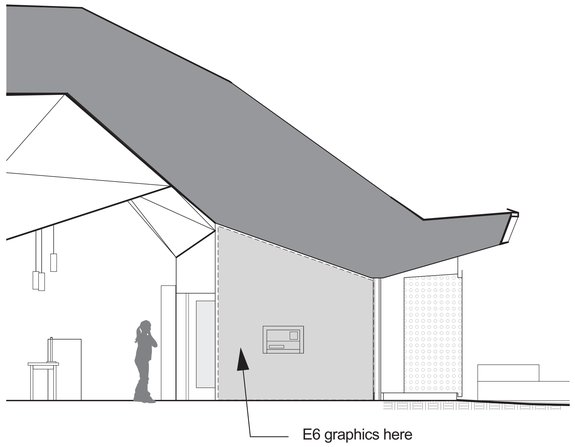

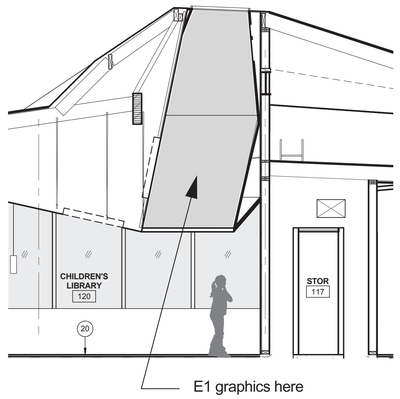

Direct Digital Print on opaque, high performance white vinyl.
Applied to painted drywall. Assume 400sf of area at each location.
Final graphic pattern TBD. Pattern different at each location.

1 SIGN TYPES E1 & E6 (E2, E4 SIM) – WALL TEXTURE GRAPHIC: ELEVATION

1/4"=1'-0"

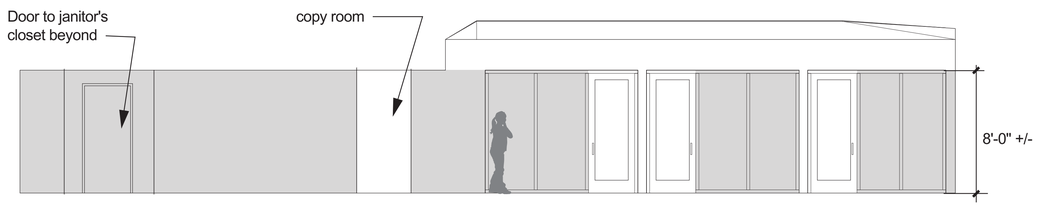

High performance vinyl film. No bleed through. 3 custom colors
Assume 650 sf of area.

2 SIGN TYPES E5 – TEXTURE GRAPHIC 2: ELEVATION

1/4"=1'-0"

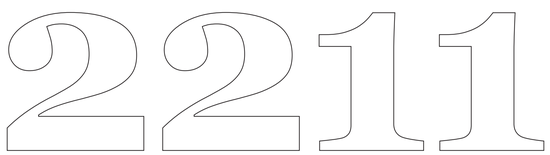

9" high x 1/4" thick painted aluminum address numbers. See Sheet G5 for location.

Address to be verified prior to fabrication.

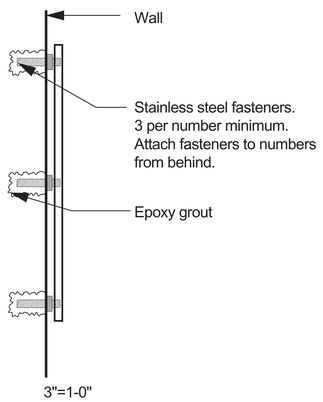

3 SIGN TYPES A6 – BUILDING ADDRESS: ELEVATION

Quarter size

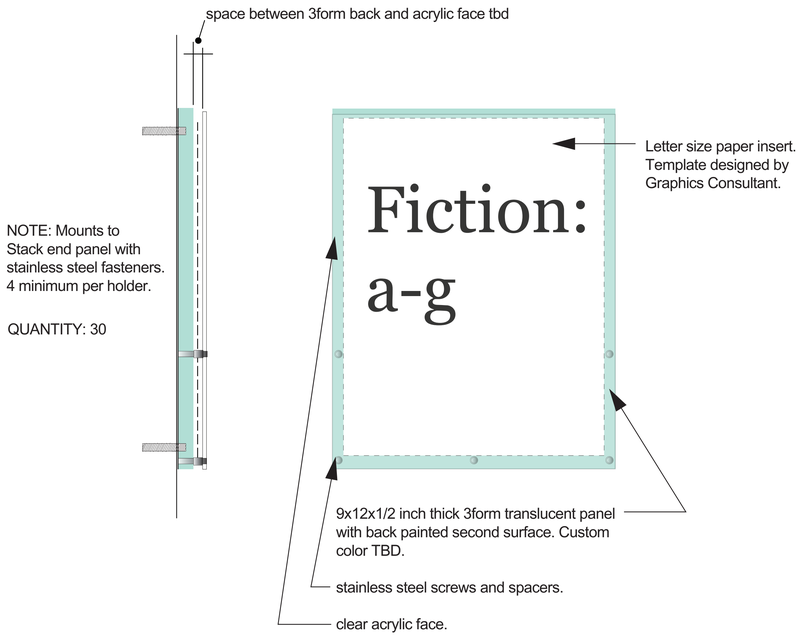

4 SIGN TYPES D3 – STACK ID HOLDER: ELEVATION

Half size

ELEVATIONS & DETAILS

PICO BRANCH LIBRARY

2201 Pico Blvd.
Santa Monica, CA 90404

PROJECT

KoningEizenbergArchitecture
1454 25th St, Santa Monica, CA 90404

310.828.6131 info@kearch.com
310.828.0719 fax www.kearch.com

ARCHITECT'S PROJECT NO.
1001

ARCHITECT

All designs, ideas, arrangements and plans indicated by these drawings are the property and copyright of the Architect and shall neither be used on any other work nor be disclosed to any other person for any use whatsoever without written permission.

Koning Eizenberg Architecture and/or its principals and employees waives any and all liability or responsibility for problems that may occur when these plans, drawings, specifications, and/or designs are followed without the professional's guidance with ambiguities, or conflicts which are alleged.

7906 W. 4th St. Los Angeles, Ca 90048
323 658-7955 Fax 323 658-7961

NEWSOM DESIGN

CONSULTANT

City of Santa Monica
Architecture Services

1437 4TH STREET, SUITE 300
SANTA MONICA, CA 90401
TEL. (310) 458-2205
FAX. (310) 399-1541
architecture@smgov.net

SUBMITTED BY : DATE : _____ 20 __

APPROVED BY : DATE : _____ 20 __
Miriam Mulder,
Architecture Services Manager
CITY OF SANTA MONICA
DEPARTMENT OF PUBLIC WORKS

REVIEWED BY : DATE : _____ 20 __

REVIEWED BY : DATE : _____ 20 __

REVIEWED BY : DATE : _____ 20 __

CITY CLIENT

NO.	DATE	BY	DESCRIPTION

REVISIONS

ISSUE
65% CONSTRUCTION DOCUMENTS / BID SET

DATE
01/23/2012

DRAWING NO. **6693**

SHEET OF SHEETS

SHEET TITLE
ELEVATION & DETAILS

SHEET NO.
G6

SHEET OF

DWG NO. -

TITLE OF PROJECT:

Acrylic plaque with matte face and polished edges

6"w x 4"h x 1/4"thk

Second surface 1 custom background color

Raised characters –
2 custom colors

Raised characters, 1/32"

Grade 2 braille beads, clear, typ.

Attach to wall with VHB tape & silicone.

One piece construction

1 SIGN TYPE C2 – TACTILE ROOM SIGN

FULL SIZE

See detail 1 this sheet for info

2 SIGN TYPE C1 – TACTILE EXIT SIGN

FULL SIZE

Acrylic plaque with matte face and polished edges

17"w x 22"h x 3/8"thk

Second surface background color – 3 custom colors

Second surface silkscreened graphics – 1custom colors

Blade sign. Attach to wall with stainless steel brackets, TBD.

NOTE:
BACKGROUND PATTERN DESIGN NOT FINAL

3 SIGN TYPE B4 – RESTROOM DIRECTIONAL

HALF SIZE

C8

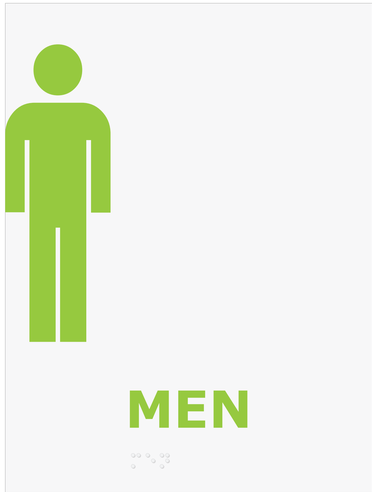

C6

C4

Acrylic plaque with matte face and polished edges

6"w x 8"h x 1/4" thick

Second surface custom background color

Second surface silkscreened graphics (symbol), one custom color

Raised characters –
1 custom color (2 for C4)

Raised characters, 1/32"

Grade 2 braille beads, clear, typ.

Attach to wall with VHB tape & silicone.

One piece construction

4 SIGN TYPE C4, C6, C8 – RESTROOM WALL SIGN

FULL SIZE

C7

C5

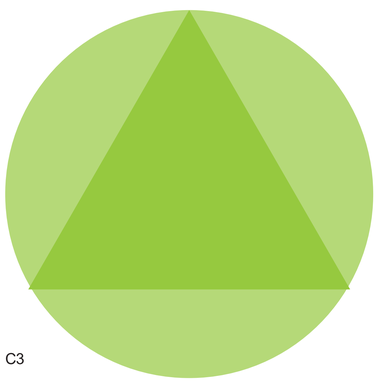

C3

Acrylic plaque with matte face and polished edges

C7 – 12"d. circle, 1/4" thick

C5 – 12" equilateral triangle, 1/4' thick

C3 – 12"d. circle, 1/4" thick with 12" equilateral triangle, 1/4' thick

Second surface background color.
C5 and C7, 1 custom color.
C3, 2 custom colors.

Attach to door with VHB tape & silicone.
Center on door horizonrally 5'-0" o.c. vertically.

5 SIGN TYPE C3, C5, C7 – RESTROOM DOOR

HALF SIZE

SHEET OF

DWG NO. - -

TITLE OF PROJECT:

PICO BRANCH LIBRARY

2201 Pico Blvd.
Santa Monica, CA 90404

PROJECT

KoningEizenbergArchitecture
1454 29th St, Santa Monica, CA 90404

310.828.6131 info@kearch.com
310.828.0719 fax www.kearch.com

ARCHITECT'S PROJECT NO.
1001

ARCHITECT

All designs, ideas, arrangements and plans indicated by these drawings are the property and copyright of the Architect and shall neither be used on any other work nor be disclosed to any other person for any use whatsoever without written permission.

Koning Eizenberg Architecture and/or its principals and employees waives any and all liability or responsibility for problems that may occur when these plans, drawings, specifications, and/or designs are followed without the professional's guidance with ambiguities, or conflicts which are alleged.

7906 W. 4th St. Los Angeles, Ca 90048
323 658-7955 Fax 323 658-7961

NEWSOM DESIGN

CONSULTANT

City of Santa Monica
Architecture Services

1437 4TH STREET, SUITE 300
SANTA MONICA, CA 90401
TEL. (310) 458-2205
FAX. (310) 399-1541
architecture@smgov.net

SUBMITTED BY : DATE : 20

APPROVED BY : DATE : 20
Miriam Mulder,
Architecture Services Manager

CITY OF SANTA MONICA
DEPARTMENT OF PUBLIC WORKS

REVIEWED BY : DATE : 20

REVIEWED BY : DATE : 20

REVIEWED BY : DATE : 20

CITY CLIENT

NO.	DATE	BY	DESCRIPTION

REVISIONS

ISSUE
65% CONSTRUCTION DOCUMENTS / BID SET

DATE
01/23/2012

DRAWING NO. **6693**

SHEET OF SHEETS

SHEET TITLE
ELEVATION & DETAILS

SHEET NO.
G7

check it out

9"

3form dimensional cut out letters. 9" high and 1/2" thick. Attach to wall with undersize backer 3/16" thick. Attach with VHB tape and silicone. 2 custom colors.

1 SIGN TYPES A9 – SELF CHECK OUT ID

1/4"=1'-0"

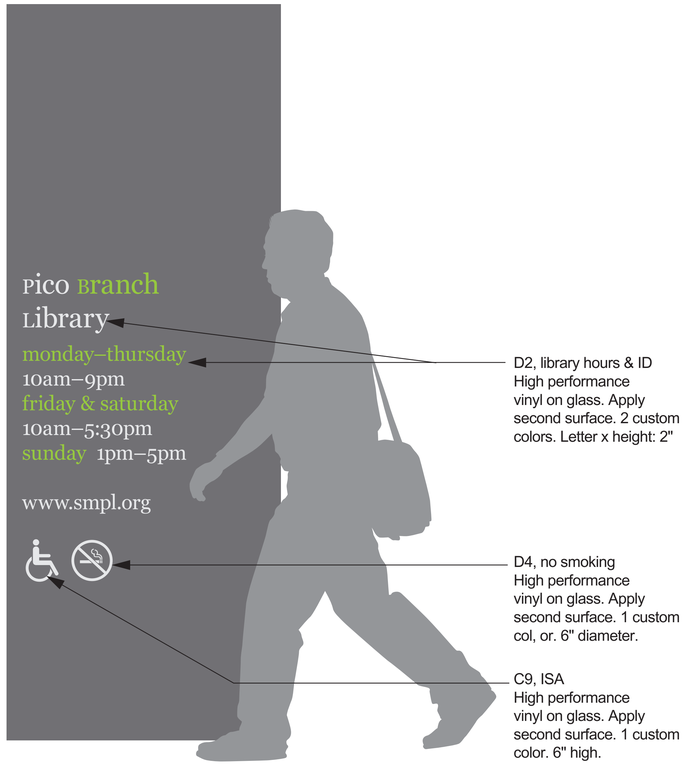

2 SIGN TYPES C9 – ISA SYMBOL, D1 – LIBRRY HOURS & D4 – NO SMOKING

1 1/2"=1'-0"

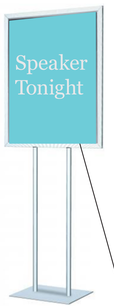

Value Line Pedestal Sign Stand
Designed with heavy duty extruded alloy
Can display 1 or 2 posters 22" wide x 28" high
Sign frame orientation: vertical (portrait)
overall height: 60"
Finish: silver
1/4" top slot opening in sign frame used for poster insertion
Sign frame is connected to the base with a double pole design
Base design: rectangle
Overall approximate sign holder weight: 13 lbs
Suitable for indoor use

QUANTITY: 6

Paper insert.Template designed by Graphics Consultant.

4 SIGN TYPES D6 – FLOOR INFORMATION HOLDER

NTS

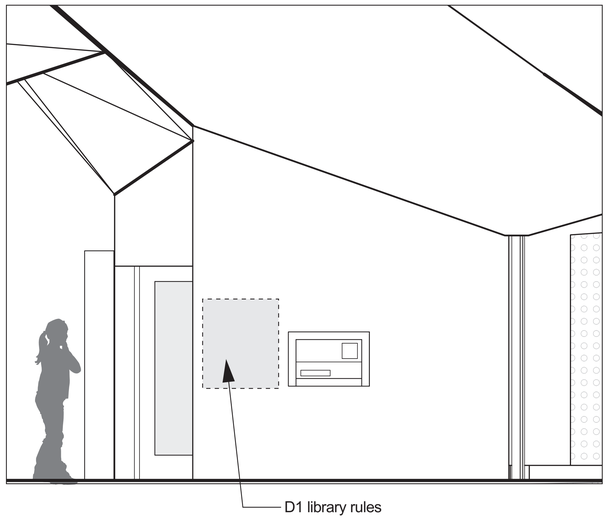

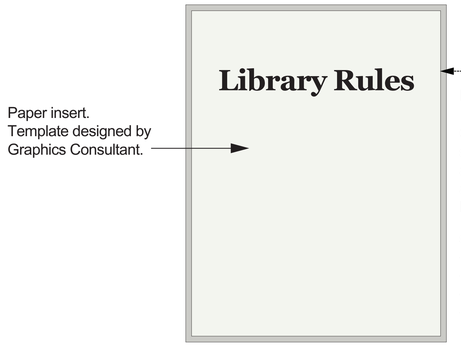

Removable side for paper insert.

Quick click frame to accept a stadard lettter size insert. Non glare acrylic protective lens. Natural anozized aluminum with special hairline finish. InfoNorm. www.infonorm.ch

size TBD

slim-line mitred 3 mm aluminium frame
- innovative magnetically mounted end caps
- protection/coverage by non glare PVC or acrylic glass
- sizes on request
- with holes for screw-mount or without holes for double tape

3 SIGN TYPES A9 – SELF CHECK OUT ID

NTS

Stainless steel plaque
12"w x 16"h x 1/8"thk
Brush finish #5, horizontal direction
silkscreened graphics –
1 custom color
Quantity: 1
Mounting location and height TBD in field with Graphic Designer.

Copy TBD.

5 SIGN TYPES D5 – ART DEDICATION PLAQUE

1/4"=1'-0"

PICO BRANCH LIBRARY
2201 Pico Blvd.
Santa Monica, CA 90404

PROJECT

KoningEizenbergArchitecture
1454 25th St, Santa Monica, CA 90404

310.828.6131 info@kearch.com
310.828.0719 fax www.kearch.com

ARCHITECT'S PROJECT NO.
1001

ARCHITECT

All designs, ideas, arrangements and plans indicated by these drawings are the property and copyright of the Architect and shall neither be used on any other work nor be disclosed to any other person for any use whatsoever without written permission.

Koning Eizenberg Architecture and/or its principals and employees waives any and all liability or responsibility for problems that may occur when these plans, drawings, specifications, and/or designs are followed without the professional's guidance with ambiguities, or conflicts which are alleged.

7906 W. 4th St. Los Angeles, Ca 90048
323 658-7955 Fax 323 658-7961

NEWSOM DESIGN

CONSULTANT

City of Santa Monica
Architecture Services

1437 4TH STREET, SUITE 300
SANTA MONICA, CA 90401
TEL. (310) 458-2205
FAX. (310) 399-1541
architecture@smgov.net

DATE : _____ 20 __
SUBMITTED BY :

DATE : _____ 20 __
APPROVED BY :
Miriam Mulder,
Architecture Services Manager

CITY OF SANTA MONICA
DEPARTMENT OF PUBLIC WORKS

REVIEWED BY : DATE : _____ 20 __

REVIEWED BY : DATE : _____ 20 __

REVIEWED BY : DATE : _____ 20 __

CITY CLIENT

NO.	DATE	BY	DESCRIPTION

REVISIONS

ISSUE
65% CONSTRUCTION DOCUMENTS / BID SET

DATE
01/23/2012

DRAWING NO. **6693**

SHEET OF SHEETS

SHEET TITLE
ELEVATION & DETAILS

SHEET NO. **G8**

SHEET OF

DWG NO. -

TITLE OF PROJECT:

ELEVATIONS & DETAILS